WIRING DIAGRAM

PREVOST

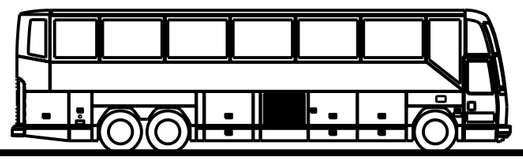

H3-41 & H3-45 BUS

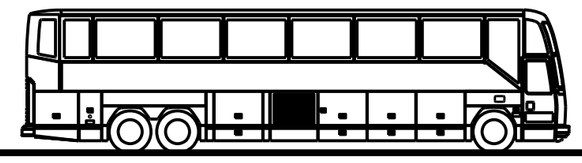

REFERENCE: MODEL 98		NO: D060902	
EFF. W/ OC* 97048	PRIOR TO / OC*	DR. PATRICE GAGNON	DATE: 97-12-01
EFF. W/ VEH.* W 2234, 2285	PRIOR TO / VEH.*	CK. JEAN RUEL	APPR. ROLAND LAPOINTE

REV.	DATE	DESCRIPTION	PAGE	BY	CK.	APPR.
01	97-12-08	NEW HOSTESS CHIME EFF.W/W2301 OC#97150	C, H, 12.1	MJ	JR	
		UPDATE:P. A,C,D,G,H,J,1.1,3.1,4.1,5.1,6.1,7.1,7.2,8.1,9.1,9.2,9.3,10.1,11.1,11.2,11.3,11.4,11.5,12.1,13.1, 13.2,13.3,14.1,15.1,16.1,17.1,18.1,19.1,20.1,20.3,20.5,21.1,22.1,24.2,25.2,26.1,26.2,28.1.		JR	MJ	
02	98-01-08	UPDATE: P. C,7.1,13.1,21.1.		JR	MJ	
03	98-02-02	NEW TEMP. SENSOR ON WTEC III EFF.W/W2338 OC#98009	C	MJ	JR	
04	98-02-05	NEW WEBASTO TIMER EFF.W/W2372 OC#97154	C, 26.1, 26.2	MJ	JR	
05	98-02-17	OPTION CB ADDED	A, 2.1, 20.5, J	S.G.	JR	
		UPDATE	C, 13.3, 23.1	MJ	JR	
06	98-02-19	NEW ARRANGEMENT THERMISTOR HVAC EFF. W/W2459 OC #97152				
		ADD LIQUID SOL. VALVE ON HVAC CENTRAL EFF. W/W2459 OC #98001	C,13.1,13.2	JR	MJ	
07	98-03-11	NEW LOCK SOL. VALVE ON ENTRANCE DOOR SEDAN EFF. W/W2390 OC #97133	16.1	MJ	JR	
		UPDATE	8.1, 12.1	MJ	JR	
08	98-05-05	NEW TRANSMISSION EATON EFF. W/W2589 OC #98031 PAGE: A,E,F,G,H,I,L,1.1,2.1,3.1,4.1, PAGE: 5.1,6.1,6.3,7.1,7.2,15.1		S.G.	JR	
		UPDATE PAGE: B1,B1sp1,B1sp2,K,4.1sp1,4.1sp2,5.1sp1,5.1sp2,8.1,9.1,9.2,9.3,11.2,11.3,13.1,14.1, 15.1sp1,18.1,18.1sp1,18.1sp3,19.1,20.1,22.1,21.1sp1,24.1,24.2,24.3,25.1,25.2,27.1,28.1		S.G.	JR	
09	98-07-02	NEW WIRING HARNESS FOR CLEARANCE LIGHT OC #98028 EFF. W/ X-2638	C	JR	JR	
		RELAY R8 AND R11 REMOVED . OC # 98048 EFF. W/X-2657	C,F,I,2.1,4.1,4.1SP1, 4.1SP2,4.1SP3,5.1, 5.1SP1, 5.1SP2, 6.1 6.3, 8.1,19.1,4.1SP4			
10	98-07-02	NEW WIRING HARNESS FOR A/C IN PARCEL RACK OC #98073 EFF. W/ X-2670	13.3	P.G.	JR	
		NEW WIRING HARNESS FOR 2 SPDS IN HAT RACK BLOWER OC #98069 EFF. W/ X-2726	C, I, 11.3, 13.3	P.G.		
11	98-07-14	HUMIDISTAT REMOVED O.C. #98090 EFF. W/ X-2814	C,13.2	JR	JR	

PREVOST H3-41 & H3-45 BUS

NO: D060902 P. 2/2

REV.	DATE	DESCRIPTION	PAGE	BY	CK.	APPR.
12	98-09-17	NEW OPTION FRONT CAMERA O.C.#98117 EFF. W/X2639	A, G, 20.7	S.G.	JR	
		UPDATE PAGE: J,1.1,1.2,2.1,3.1,8.1,13.2SP1,13.2SP2,13.3,20.1,21.1,21.1SP1,23.1		S.G.		
13	98-09	LIQ. SOL. VALVE ADDED ON PASSENGER A/C SYSTEM WB 98-33 EFF. W2285 TO W2457	P. 13.2	J.R.	JR	
14	98-10	RESISTOR ADDED IN SERIAL WITH COIL OF CONDENSER RELAY OC#98112 EFF. X2811	P. J,13.1	J.R.	JR	
15	98-10	CABLE 12VF AND BREAKER CB4 WERE INCREASE OC # 98133 EFF.: X-2871	P. B1,B1SP1,B1SP2,F 1.1,2.1	J.R.	JR	
16	98-11	INTRODUCTION TWO ALTERNAROR BOSCH OC#98012 EFF. X-2831, X-2901...	P. A,B1,C,E,F,G,H,I,J, 1.1,2.1,4.1,4.2,6.1 7.1,8.1,9.1,13.1,13.3, 22.1,23.1,25.1,25.2	J.R.	JR	
17	98-11	UPDATE PAGE: D, 2.1, 5.1SP1, 5.1SP2, 20.3, 20.7, 23.1		S.G.	JR	
17	98-11	ABS DIFFERENTIEL SENSOR EFF. W/X2886 OC#98075	C, G	S.G.	JR	
17	98-11	NEW DRIVER SPEAKER EFF.W/X2946 OC#98161	20.1	S.G.	JR	
18	98-12	UPDATE	4.1 sp4	S.G.		
19	99-01	UPDATE BOSCH ALTERNATOR CIRCUIT	P. 1.1, 4.1, 4.2	J.R.	JR	
20	99-01	ENGINE DOOR SW. REPLACED O.C. # 98135 EFF. / X3022	P. C, 11.1	J.R.	JR	
21	99-01	INTRODUCTION ELECTRONIC CONTROL FOR BOSCH ALTERNATOR EFF./ X3033	P. 4.2 , M	J.R.	JR	
22	99-01	UPDTATE	9.2sp2, 11.3sp2	S.G.	JR	
23	99-04	RESISTOR ADDED ON OPEN ENT. DOOR SOLENOID O.C.#99050 EFF. X-3190	P. J,16.1	J.R.		
24	99-04	INTRODUCTION NEW CHARGER VANNER 41 AMP. 0C# 99008 EFF./ X3213	P. B1,B1sp1,B1sp2, B2,C,2.1,4.2,5.1, 8.1,11.4	J.R.		

WIRING DIAGRAM INDEX

A	A/C, HEAT & VENT. SYSTEM	Page:	13.1
	AIR DRYER	Page:	8.1
	ALARM & SIGNAL	Page:	7.2
	ABS	Page:	21.1
	ARRANGEMENT - CABLE	Page:	B
	ARRANGEMENT - HARNESS	Page:	C
	ARRANGEMENT - SPARE WIRE	Page:	D
B	BACK-UP ALARM	Page:	9.3
	BACK-UP MONITOR	Page:	27.1
	BATTERY STANDARD AND 8D	Page:	1.2
C	CLUSTER	Page:	7.1
	CHARGING SYSTEM	Page:	4.1
	CIGAR LIGHTER	Page:	14.1
	CODE - CIRCUIT NUMBER	Page:	E
	CODE - CIRCUIT BREAKER	Page:	F
	CODE - CONNECTOR	Page:	G
	CODE - DIODE	Page:	H
	CODE - RELAY	Page:	I
	CODE - RESISTOR	Page:	J
	CODE - WIRING KEY	Page:	K
	CODE - FUSE	Page:	L
	CODE - MODULE	Page:	M
	CRUISE CONTROL - DDEC	Page:	5.1
D	DDEC III	Page:	5.1
	DIGITAL CLOCK	Page:	14.1
	DISTRIBUTION 12V, 24V	Page:	1.1
	DISTRIB. 12V DISC., IGN & HOT WIRE	Page:	2.1
	DRIVER'S WINDOW LIFTER	Page:	14.1
E	ENGINE BLOCK HEATER	Page:	12.1
	ENGINE BREAKE SYSTEM	Page:	19.1
	ENGINE CONTROL	Page:	4.1
	ENTRANCE DOOR SEDAN	Page:	16.1
	ETHER COLD START	Page:	8.1
	EXTERIOR LIGHTIHG	Page:	9.1
F	FAN-CLUTCH RADIATOR	Page:	8.1
	FAST IDLE - DDEC	Page:	5.1
	FIRE DETECTOR	Page:	7.2
	FRONT DESTINATION SIGN	Page:	17.1
	FUEL WATER FILTER	Page:	8.1
	FUEL PRIME PUMP	Page:	12.1
G	GALLEY ACCESSORIES	Page:	23.1
	GROUND SYSTEM	Page:	3.1
H	HIGH BUOY	Page:	18.1
	HOTESS CHIME	Page:	12.1
I	INTERIOR LIGHTING	Page:	11.1
	INTERCOM	Page:	27.1
K	KNEELING SYSTEM	Page:	18.1
L	LAVATORY	Page:	17.1
	LOW BUOY	Page:	18.1
	LUGGAGE DOOR LOCK	Page:	19.1
M	MIRROR-REAR VIEW	Page:	24.1
P	PARKING BREAKE SWITCH	Page:	8.1
	POWER 12V OUTLET	Page:	14.1
	PRODRIVER	Page:	8.1
R	RETARDER - WORLD TRANSM.	Page:	19.1
S	SOUND & VIDEO SYSTEM	Page:	20.1
	SUN VISOR	Page:	14.1
T	TELL TALE LIGHT MODULES	Page	28.1
	TRANSMISSION - MANUAL	Page:	22.1
	TRANSMISSION - WORLD	Page:	6.1
W	WATER HEATER PRE-HEAT	Page:	26.1
	WATER TANK HEATER LAVATORY	Page:	12.1
	WHEEL CHAIR LIFT - RICHON 9000	Page:	25.2
	WHEEL CHAIR LIFT - STEW. & STEV.	Page:	25.1
	WINDOW AJAR	Page:	7.2
	WINDSHIELD (UP) FAN DEFROSTOR	Page:	22.1
	WINDSHIELD (UP) HEATED	Page:	22.1
	WIPER & WASHER	Page:	10.1

WIRING DIAGRAM INDEX

A	A/C, HEAT & VENT. SYSTEM	Page:	13.1
	AIR DRYER	Page:	8.1
	ALARM & SIGNAL	Page:	7.2
	ABS	Page:	21.1
	ARRANGEMENT - CABLE	Page:	B
	ARRANGEMENT - HARNESS	Page:	C
	ARRANGEMENT - SPARE WIRE	Page:	D
B	BACK-UP ALARM	Page:	9.3
	BACK-UP MONITOR	Page:	27.1
	BATTERY CHARGER	Page:	11.4
	BATTERY STANDARD AND 8D	Page:	1.2
C	CLUSTER	Page:	7.1
	CHARGING SYSTEM	Page:	4.1
	CIGAR LIGHTER	Page:	14.1
	CODE - CIRCUIT NUMBER	Page:	E
	CODE - CIRCUIT BREAKER	Page:	F
	CODE - CONNECTOR	Page:	G
	CODE - DIODE	Page:	H
	CODE - RELAY	Page:	I
	CODE - RESISTOR	Page:	J
	CODE - WIRING KEY	Page:	K
	CODE - FUSE	Page:	L
	CODE - MODULE	Page:	M
	CRUISE CONTROL - DDEC	Page:	5.1
D	DDEC III & IV	Page:	5.1
	DIGITAL CLOCK	Page:	14.1
	DISTRIBUTION 12V, 24V	Page:	1.1
	DISTRIB. 12V DISC., IGN & HOT WIRE	Page:	2.1
	DRIVER'S WINDOW LIFTER	Page:	14.1
E	ENGINE BLOCK HEATER	Page:	12.1
	ENGINE BRAKE SYSTEM	Page:	19.1
	ENGINE CONTROL	Page:	4.1
	ENTRANCE DOOR SEDAN	Page:	16.1
	ETHER COLD START	Page:	8.1
	EXTERIOR LIGHTIHG	Page:	9.1
F	FAN-CLUTCH RADIATOR	Page:	8.1
	FAST IDLE - DDEC	Page:	5.1
	FIRE DETECTOR	Page:	7.2
	FRONT DESTINATION SIGN	Page:	17.1
	FUEL WATER FILTER	Page:	8.1
	FUEL PRIME PUMP	Page:	12.1
G	GALLEY ACCESSORIES	Page:	23.1
	GROUND SYSTEM	Page:	3.1
H	HIGH BUOY	Page:	18.1
	HOTESS CHIME	Page:	12.1
I	INTERIOR LIGHTING	Page:	11.1
	INTERCOM	Page:	27.1
K	KNEELING SYSTEM	Page:	18.1
L	LAVATORY	Page:	17.1
	LOW BUOY	Page:	18.1
	LUGGAGE DOOR LOCK	Page:	19.1
M	MIRROR-REAR VIEW	Page:	24.1
P	PARKING BRAKE SWITCH	Page:	8.1
	POWER 12V OUTLET	Page:	14.1
	PRODRIVER	Page:	8.1
R	RETARDER - WORLD TRANSM.	Page:	19.1
S	SPEED SWITCH (MANUAL TRANS.)		15.1
	SOUND & VIDEO SYSTEM	Page:	20.1
	SPEAKER PASSENGER	Page:	20.2
	SUN VISOR	Page:	14.1
T	TELL TALE LIGHT MODULES	Page	28.1
	TRANSMISSION - MANUAL	Page:	15.1
	TRANSMISSION - WORLD	Page:	6.1
W	WATER HEATER PRE-HEAT	Page:	26.1
	WATER TANK HEATER LAVATORY	Page:	12.1
	WHEEL CHAIR LIFT - RICHON 9000	Page:	25.2
	WHEEL CHAIR LIFT - STEW. & STEV.	Page:	25.1
	WINDOW AJAR	Page:	7.2
	WINDSHIELD (UP) FAN DEFROSTOR	Page:	22.1
	WINDSHIELD (UP) HEATED	Page:	22.1
	WIPER & WASHER	Page:	10.1

WIRING DIAGRAM INDEX

A	A/C, HEAT & VENT. SYSTEM	Page:	13.1
	AIR DRYER	Page:	8.1
	ALARM & SIGNAL	Page:	7.2
	ABS	Page:	21.1
	ARRANGEMENT - CABLE	Page:	B
	ARRANGEMENT - HARNESS	Page:	C
	ARRANGEMENT - SPARE WIRE	Page:	D
B	BACK-UP ALARM	Page:	9.3
	BACK-UP MONITOR	Page:	27.1
	BATTERY CHARGER	Page:	11.4
	BATTERY STANDARD AND 8D	Page:	1.2
C	CLUSTER	Page:	7.1
	CHARGING SYSTEM	Page:	4.1
	CIGAR LIGHTER	Page:	14.1
	CODE - CIRCUIT NUMBER	Page:	E
	CODE - CIRCUIT BREAKER	Page:	F
	CODE - CONNECTOR	Page:	G
	CODE - DIODE	Page:	H
	CODE - RELAY	Page:	I
	CODE - RESISTOR	Page:	J
	CODE - WIRING KEY	Page:	K
	CODE - FUSE	Page:	L
	CODE - MODULE	Page:	M
	CRUISE CONTROL - DDEC	Page:	5.1
	CB OPTION	Page:	20.5
D	DDEC III & IV	Page:	5.1
	DIGITAL CLOCK	Page:	14.1
	DISTRIBUTION 12V, 24V	Page:	1.1
	DISTRIB. 12V DISC., IGN & HOT WIRE	Page:	2.1
	DRIVER'S WINDOW LIFTER	Page:	14.1
E	ENGINE BLOCK HEATER	Page:	12.1
	ENGINE BRAKE SYSTEM	Page:	19.1
	ENGINE CONTROL	Page:	4.1
	ENTRANCE DOOR SEDAN	Page:	16.1
	ETHER COLD START	Page:	8.1
	EXTERIOR LIGHTIHG	Page:	9.1
F	FAN-CLUTCH RADIATOR	Page:	8.1
	FAST IDLE - DDEC	Page:	5.1
	FIRE DETECTOR	Page:	7.2
	FRONT DESTINATION SIGN	Page:	17.1
	FUEL WATER FILTER	Page:	8.1
	FUEL PRIME PUMP	Page:	12.1
G	GALLEY ACCESSORIES	Page:	23.1
	GROUND SYSTEM	Page:	3.1
H	HIGH BUOY	Page:	18.1
	HOTESS CHIME	Page:	12.1
I	INTERIOR LIGHTING	Page:	11.1
	INTERCOM	Page:	27.1
K	KNEELING SYSTEM	Page:	18.1
L	LAVATORY	Page:	17.1
	LOW BUOY	Page:	18.1
	LUGGAGE DOOR LOCK	Page:	19.1
M	MIRROR-REAR VIEW	Page:	24.1
P	PARKING BRAKE SWITCH	Page:	8.1
	POWER 12V OUTLET	Page:	14.1
	PRODRIVER	Page:	8.1
R	RETARDER - WORLD TRANSM.	Page:	19.1
S	SPEED SWITCH (MANUAL TRANS.)		15.1
	SOUND & VIDEO SYSTEM	Page:	20.1
	SPEAKER PASSENGER	Page:	20.2
	SUN VISOR	Page:	14.1
T	TELL TALE LIGHT MODULES	Page	28.1
	TRANSMISSION - MANUAL	Page:	15.1
	TRANSMISSION - WORLD	Page:	6.1
W	WATER HEATER PRE-HEAT	Page:	26.1
	WATER TANK HEATER LAVATORY	Page:	12.1
	WHEEL CHAIR LIFT - RICHON 9000	Page:	25.2
	WHEEL CHAIR LIFT - STEW. & STEV.	Page:	25.1
	WINDOW AJAR	Page:	7.2
	WINDSHIELD (UP) FAN DEFROSTOR	Page:	22.1
	WINDSHIELD (UP) HEATED	Page:	22.1
	WIPER & WASHER	Page:	10.1

WIRING DIAGRAM INDEX

A	A/C, HEAT & VENT. SYSTEM	Page:	13.1
	AIR DRYER	Page:	8.1
	ALARM & SIGNAL	Page:	7.2
	ABS	Page:	21.1
	ARRANGEMENT - CABLE	Page:	B
	ARRANGEMENT - HARNESS	Page:	C
	ARRANGEMENT - SPARE WIRE	Page:	D
B	BACK-UP ALARM	Page:	9.3
	BACK-UP MONITOR	Page:	27.1
	BATTERY CHARGER	Page:	11.4
	BATTERY STANDARD AND 8D	Page:	1.2
C	CLUSTER	Page:	7.1
	CHARGING SYSTEM	Page:	4.1
	CIGAR LIGHTER	Page:	14.1
	CODE - CIRCUIT NUMBER	Page:	E
	CODE - CIRCUIT BREAKER	Page:	F
	CODE - CONNECTOR	Page:	G
	CODE - DIODE	Page:	H
	CODE - RELAY	Page:	I
	CODE - RESISTOR	Page:	J
	CODE - WIRING KEY	Page:	K
	CODE - FUSE	Page:	L
	CODE - MODULE	Page:	M
	CRUISE CONTROL - DDEC	Page:	5.1
	CB OPTION	Page:	20.5
D	DDEC III & IV	Page:	5.1
	DIGITAL CLOCK	Page:	14.1
	DISTRIBUTION 12V, 24V	Page:	1.1
	DISTRIB. 12V DISC., IGN & HOT WIRE	Page:	2.1
	DRIVER'S WINDOW LIFTER	Page:	14.1
E	ENGINE BLOCK HEATER	Page:	12.1
	ENGINE BRAKE SYSTEM	Page:	19.1
	ENGINE CONTROL	Page:	4.1
	ENTRANCE DOOR SEDAN	Page:	16.1
	ETHER COLD START	Page:	8.1
	EXTERIOR LIGHTIHG	Page:	9.1
F	FAN-CLUTCH RADIATOR	Page:	8.1
	FAST IDLE - DDEC	Page:	5.1
	FIRE DETECTOR	Page:	7.2
	FRONT DESTINATION SIGN	Page:	17.1
	FUEL WATER FILTER	Page:	8.1
	FUEL PRIME PUMP	Page:	12.1
G	GALLEY ACCESSORIES	Page:	23.1
	GROUND SYSTEM	Page:	3.1
H	HIGH BUOY	Page:	18.1
	HOTESS CHIME	Page:	12.1
I	INTERIOR LIGHTING	Page:	11.1
	INTERCOM	Page:	27.1
K	KNEELING SYSTEM	Page:	18.1
L	LAVATORY	Page:	17.1
	LOW BUOY	Page:	18.1
	LUGGAGE DOOR LOCK	Page:	19.1
M	MIRROR-REAR VIEW	Page:	24.1
P	PARKING BRAKE SWITCH	Page:	8.1
	POWER 12V OUTLET	Page:	14.1
	PRODRIVER	Page:	8.1
R	RETARDER - WORLD TRANSM.	Page:	19.1
S	SPEED SWITCH (MANUAL TRANS.)		15.1
	SOUND & VIDEO SYSTEM	Page:	20.1
	SPEAKER PASSENGER	Page:	20.2
	SUN VISOR	Page:	14.1
T	TELL TALE LIGHT MODULES	Page	28.1
	TRANSMISSION - MANUAL	Page:	15.1
	TRANSMISSION - WORLD	Page:	6.1
	TRANSMISSION - EATON	Page:	6.3
W	WATER HEATER PRE-HEAT	Page:	26.1
	WATER TANK HEATER LAVATORY	Page:	12.1
	WHEEL CHAIR LIFT - RICON 9000	Page:	25.2
	WHEEL CHAIR LIFT - STEW. & STEV.	Page:	25.1
	WINDOW AJAR	Page:	7.2
	WINDSHIELD (UP) FAN DEFROSTOR	Page:	22.1
	WINDSHIELD (UP) HEATED	Page:	22.1
	WIPER & WASHER	Page:	10.1

WIRING DIAGRAM INDEX

A	A/C, HEAT & VENT. SYSTEM	Page:	13.1
	AIR DRYER	Page:	8.1
	ALARM & SIGNAL	Page:	7.2
	ABS	Page:	21.1
	ARRANGEMENT - CABLE	Page:	B
	ARRANGEMENT - HARNESS	Page:	C
	ARRANGEMENT - SPARE WIRE	Page:	D
B	BACK-UP ALARM	Page:	9.3
	BACK-UP MONITOR	Page:	27.1
	BATTERY CHARGER	Page:	11.4
	BATTERY STANDARD AND 8D	Page:	1.2
C	CLUSTER	Page:	7.1
	CHARGING SYSTEM	Page:	4.1
	CIGAR LIGHTER	Page:	14.1
	CODE - CIRCUIT NUMBER	Page:	E
	CODE - CIRCUIT BREAKER	Page:	F
	CODE - CONNECTOR	Page:	G
	CODE - DIODE	Page:	H
	CODE - RELAY	Page:	I
	CODE - RESISTOR	Page:	J
	CODE - WIRING KEY	Page:	K
	CODE - FUSE	Page:	L
	CODE - MODULE	Page:	M
	CRUISE CONTROL - DDEC	Page:	5.1
	CB OPTION	Page:	20.5
D	DDEC III & IV	Page:	5.1
	DIGITAL CLOCK	Page:	14.1
	DISTRIBUTION 12V, 24V	Page:	1.1
	DISTRIB. 12V DISC., IGN & HOT WIRE	Page:	2.1
	DRIVER'S WINDOW LIFTER	Page:	14.1
E	ENGINE BLOCK HEATER	Page:	12.1
	ENGINE BRAKE SYSTEM	Page:	19.1
	ENGINE CONTROL	Page:	4.1
	ENTRANCE DOOR SEDAN	Page:	16.1
	ETHER COLD START	Page:	8.1
	EXTERIOR LIGHTIHG	Page:	9.1
F	FAN-CLUTCH RADIATOR	Page:	8.1
	FAST IDLE - DDEC	Page:	5.1
	FIRE DETECTOR	Page:	7.2
	FRONT DESTINATION SIGN	Page:	17.1
	FRONT CAMERA	Page:	20.7
	FUEL WATER FILTER	Page:	8.1
	FUEL PRIME PUMP	Page:	12.1
G	GALLEY ACCESSORIES	Page:	23.1
	GROUND SYSTEM	Page:	3.1
H	HIGH BUOY	Page:	18.1
	HOTESS CHIME	Page:	12.1
I	INTERIOR LIGHTING	Page:	11.1
	INTERCOM	Page:	27.1
K	KNEELING SYSTEM	Page:	18.1
L	LAVATORY	Page:	17.1
	LOW BUOY	Page:	18.1
	LUGGAGE DOOR LOCK	Page:	19.1
M	MIRROR-REAR VIEW	Page:	24.1
P	PARKING BRAKE SWITCH	Page:	8.1
	POWER 12V OUTLET	Page:	14.1
	PRODRIVER	Page:	8.1
R	RETARDER - WORLD TRANSM.	Page:	19.1
S	SPEED SWITCH (MANUAL TRANS.)		15.1
	SOUND & VIDEO SYSTEM	Page:	20.1
	SPEAKER PASSENGER	Page:	20.2
	SUN VISOR	Page:	14.1
T	TELL TALE LIGHT MODULES	Page	28.1
	TRANSMISSION - MANUAL	Page:	15.1
	TRANSMISSION - WORLD	Page:	6.1
	TRANSMISSION - EATON	Page:	6.3
W	WATER HEATER PRE-HEAT	Page:	26.1
	WATER TANK HEATER LAVATORY	Page:	12.1
	WHEEL CHAIR LIFT - RICON 9000	Page:	25.2
	WHEEL CHAIR LIFT - STEW. & STEV.	Page:	25.1
	WINDOW AJAR	Page:	7.2
	WINDSHIELD (UP) FAN DEFROSTOR	Page:	22.1
	WINDSHIELD (UP) HEATED	Page:	22.1
	WIPER & WASHER	Page:	10.1

WIRING DIAGRAM INDEX

A	A/C, HEAT & VENT. SYSTEM	Page:	13.1
	AIR DRYER	Page:	8.1
	ALARM & SIGNAL	Page:	7.2
	ABS	Page:	21.1
	ARRANGEMENT - CABLE	Page:	B
	ARRANGEMENT - HARNESS	Page:	C
	ARRANGEMENT - SPARE WIRE	Page:	D
B	BACK-UP ALARM	Page:	9.3
	BACK-UP MONITOR	Page:	27.1
	BATTERY CHARGER	Page:	11.4
	BATTERY STANDARD AND 8D	Page:	1.2
C	CLUSTER	Page:	7.1
	CHARGING SYSTEM	Page:	4.2
	CIGAR LIGHTER	Page:	14.1
	CODE - CIRCUIT NUMBER	Page:	E
	CODE - CIRCUIT BREAKER	Page:	F
	CODE - CONNECTOR	Page:	G
	CODE - DIODE	Page:	H
	CODE - RELAY	Page:	I
	CODE - RESISTOR	Page:	J
	CODE - WIRING KEY	Page:	K
	CODE - FUSE	Page:	L
	CODE - MODULE	Page:	M
	CRUISE CONTROL - DDEC	Page:	5.1
	CB OPTION	Page:	20.5
D	DDEC III & IV	Page:	5.1
	DIGITAL CLOCK	Page:	14.1
	DISTRIBUTION 12V, 24V	Page:	1.1
	DISTRIB. 12V DISC., IGN & HOT WIRE	Page:	2.1
	DRIVER'S WINDOW LIFTER	Page:	14.1
E	ENGINE BLOCK HEATER	Page:	12.1
	ENGINE BRAKE SYSTEM	Page:	19.1
	ENGINE CONTROL	Page:	4.1
	ENTRANCE DOOR SEDAN	Page:	16.1
	ETHER COLD START	Page:	8.1
	EXTERIOR LIGHTIHG	Page:	9.1
F	FAN-CLUTCH RADIATOR	Page:	8.1
	FAST IDLE - DDEC	Page:	5.1
	FIRE DETECTOR	Page:	7.2
	FRONT DESTINATION SIGN	Page:	17.1
	FRONT CAMERA	Page:	20.7
	FUEL WATER FILTER	Page:	8.1
	FUEL PRIME PUMP	Page:	12.1
G	GALLEY ACCESSORIES	Page:	23.1
	GROUND SYSTEM	Page:	3.1
H	HIGH BUOY	Page:	18.1
	HOTESS CHIME	Page:	12.1
I	INTERIOR LIGHTING	Page:	11.1
	INTERCOM	Page:	27.1
K	KNEELING SYSTEM	Page:	18.1
L	LAVATORY	Page:	17.1
	LOW BUOY	Page:	18.1
	LUGGAGE DOOR LOCK	Page:	19.1
M	MIRROR-REAR VIEW	Page:	24.1
P	PARKING BRAKE SWITCH	Page:	8.1
	POWER 12V OUTLET	Page:	14.1
	PRODRIVER	Page:	8.1
R	RETARDER - WORLD TRANSM.	Page:	19.1
S	SPEED SWITCH (MANUAL TRANS.)		15.1
	SOUND & VIDEO SYSTEM	Page:	20.1
	SPEAKER PASSENGER	Page:	20.2
	SUN VISOR	Page:	14.1
T	TELL TALE LIGHT MODULES	Page	28.1
	TRANSMISSION - MANUAL	Page:	15.1
	TRANSMISSION - WORLD	Page:	6.1
	TRANSMISSION - EATON	Page:	6.3
W	WATER HEATER PRE-HEAT	Page:	26.1
	WATER TANK HEATER LAVATORY	Page:	12.1
	WHEEL CHAIR LIFT - RICON 9000	Page:	25.2
	WHEEL CHAIR LIFT - STEW. & STEV.	Page:	25.1
	WINDOW AJAR	Page:	7.2
	WINDSHIELD (UP) FAN DEFROSTOR	Page:	22.1
	WINDSHIELD (UP) HEATED	Page:	22.1
	WIPER & WASHER	Page:	10.1

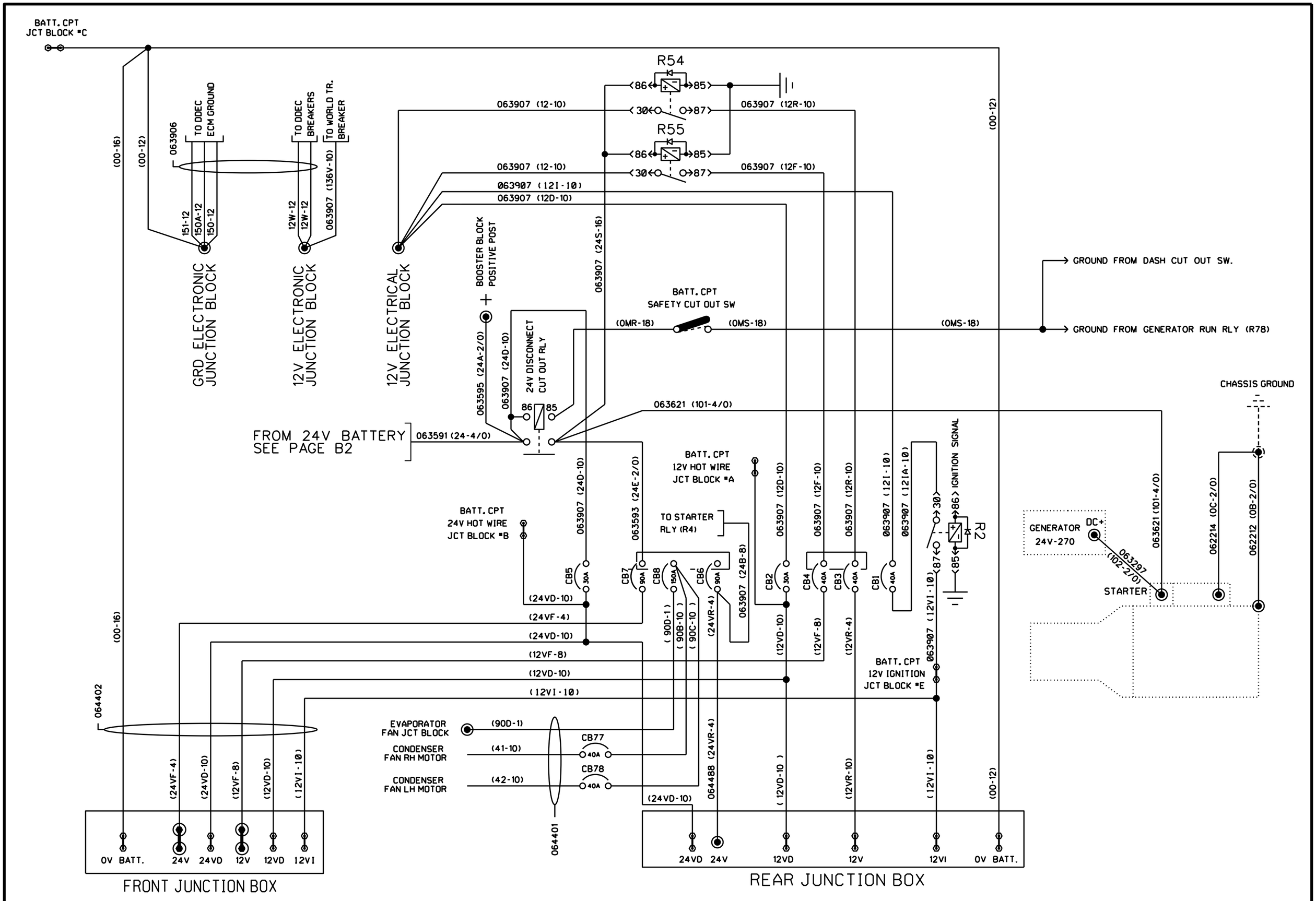

PREVOST	WIRING DIAGRAM	NO: D060902	PAGE: B1	REVISION 00

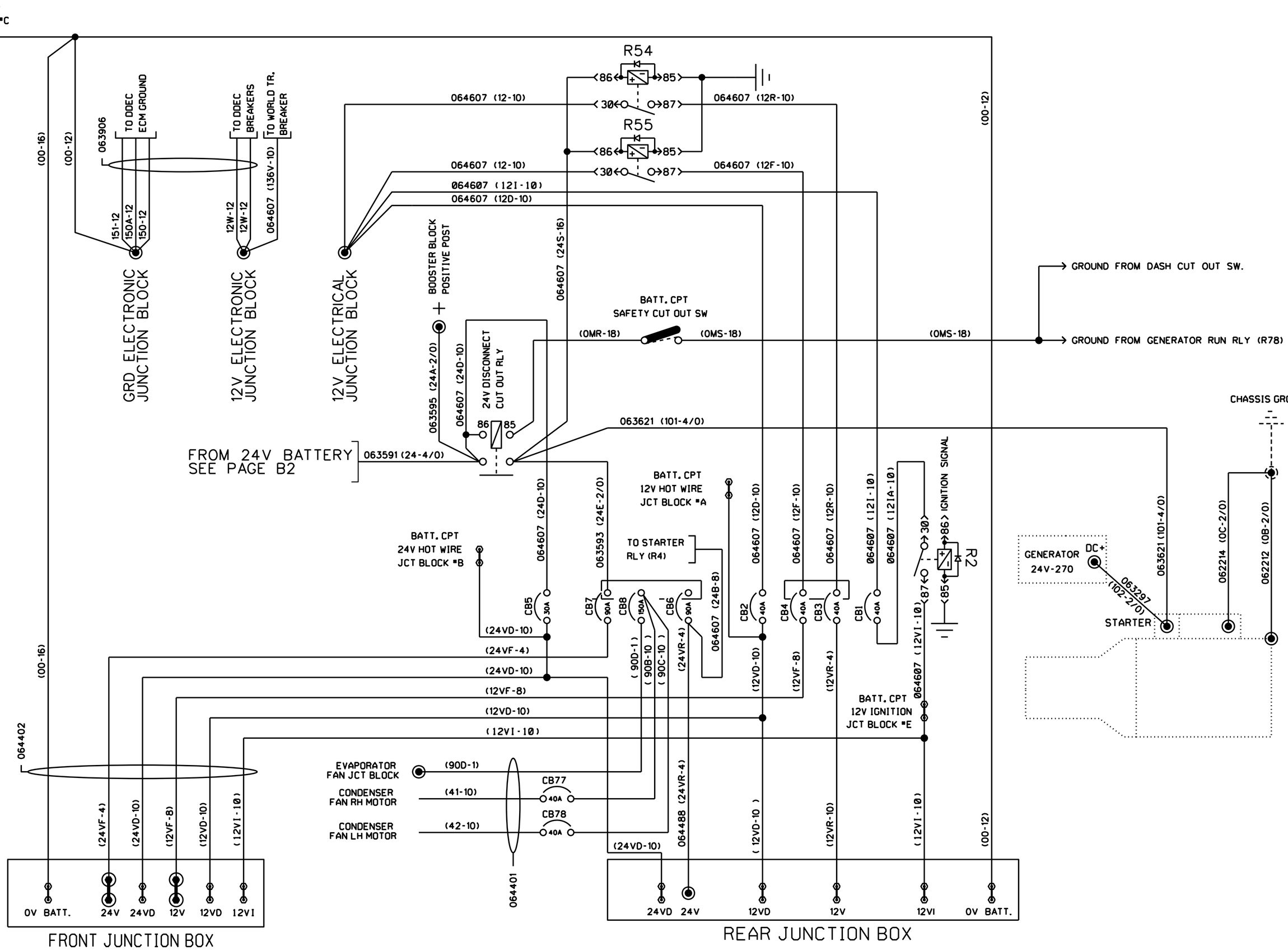

PREVOST	WIRING DIAGRAM	NO: D060902	PAGE: B1	REVISION 08

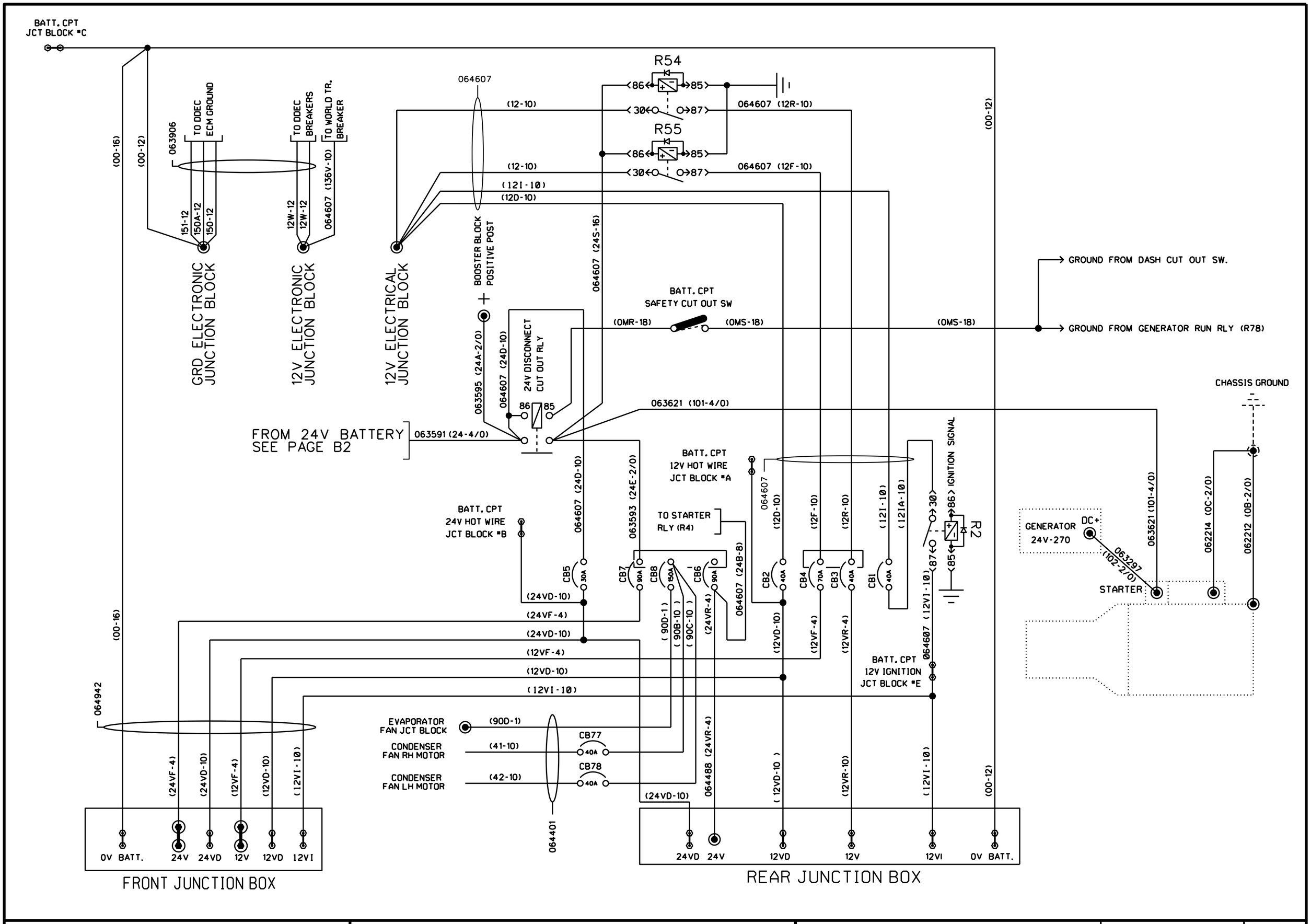

PREVOST	WIRING DIAGRAM	NO: D060902	PAGE: B1	REVISION 15

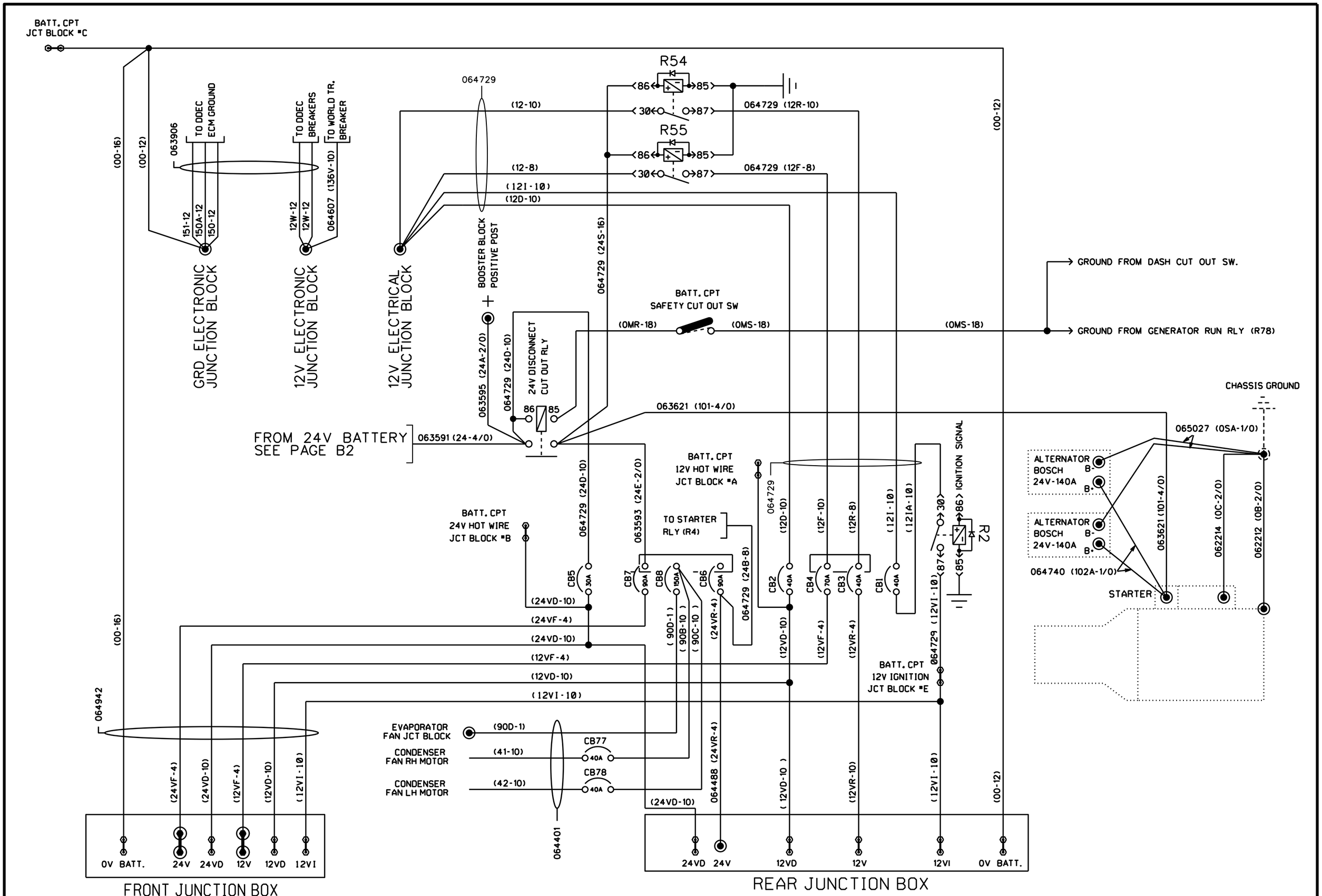

PREVOST	WIRING DIAGRAM	NO: D060902	PAGE: B1	REVISION 16

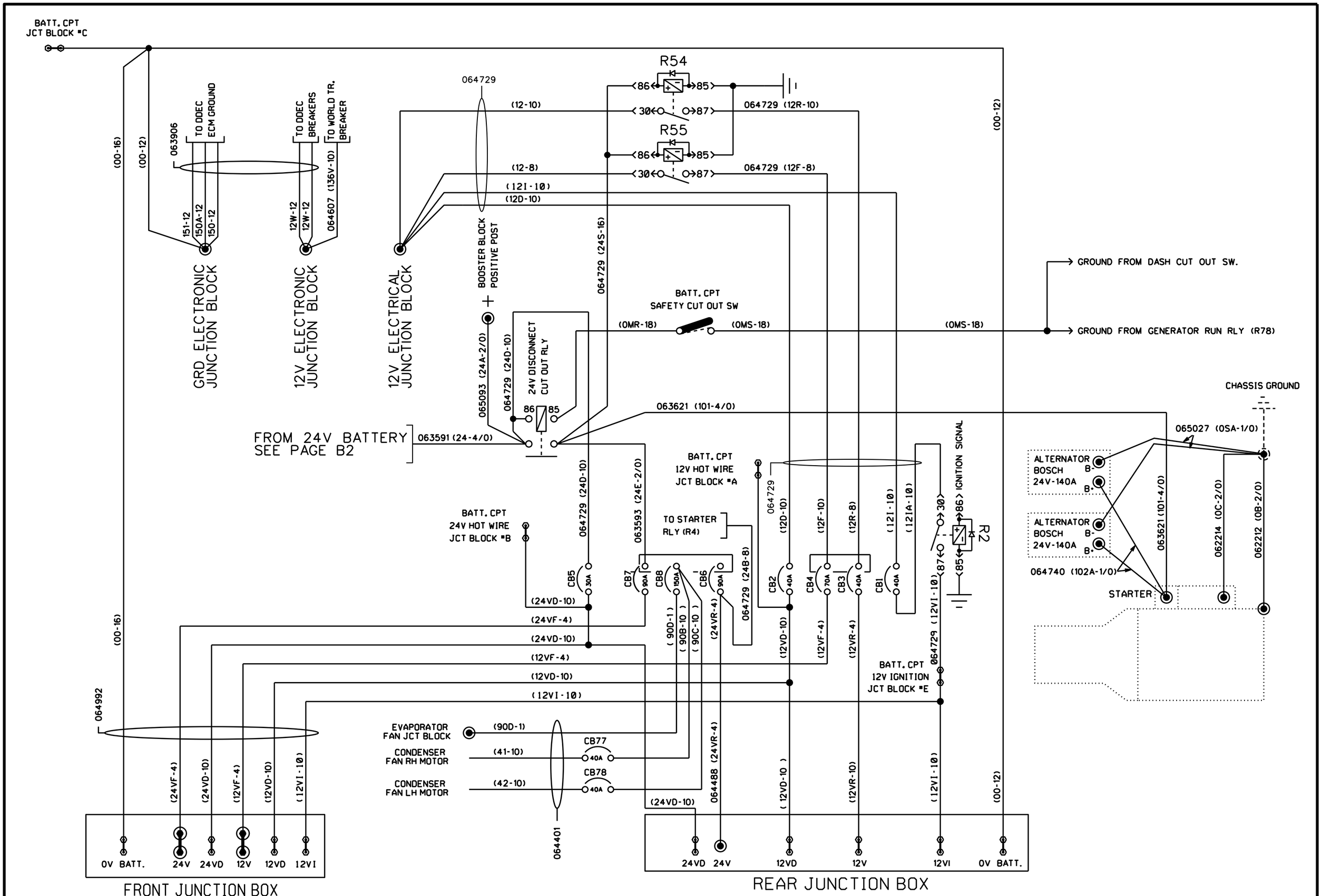

PREVOST	WIRING DIAGRAM	NO: D060902	PAGE: B1	REVISION 24

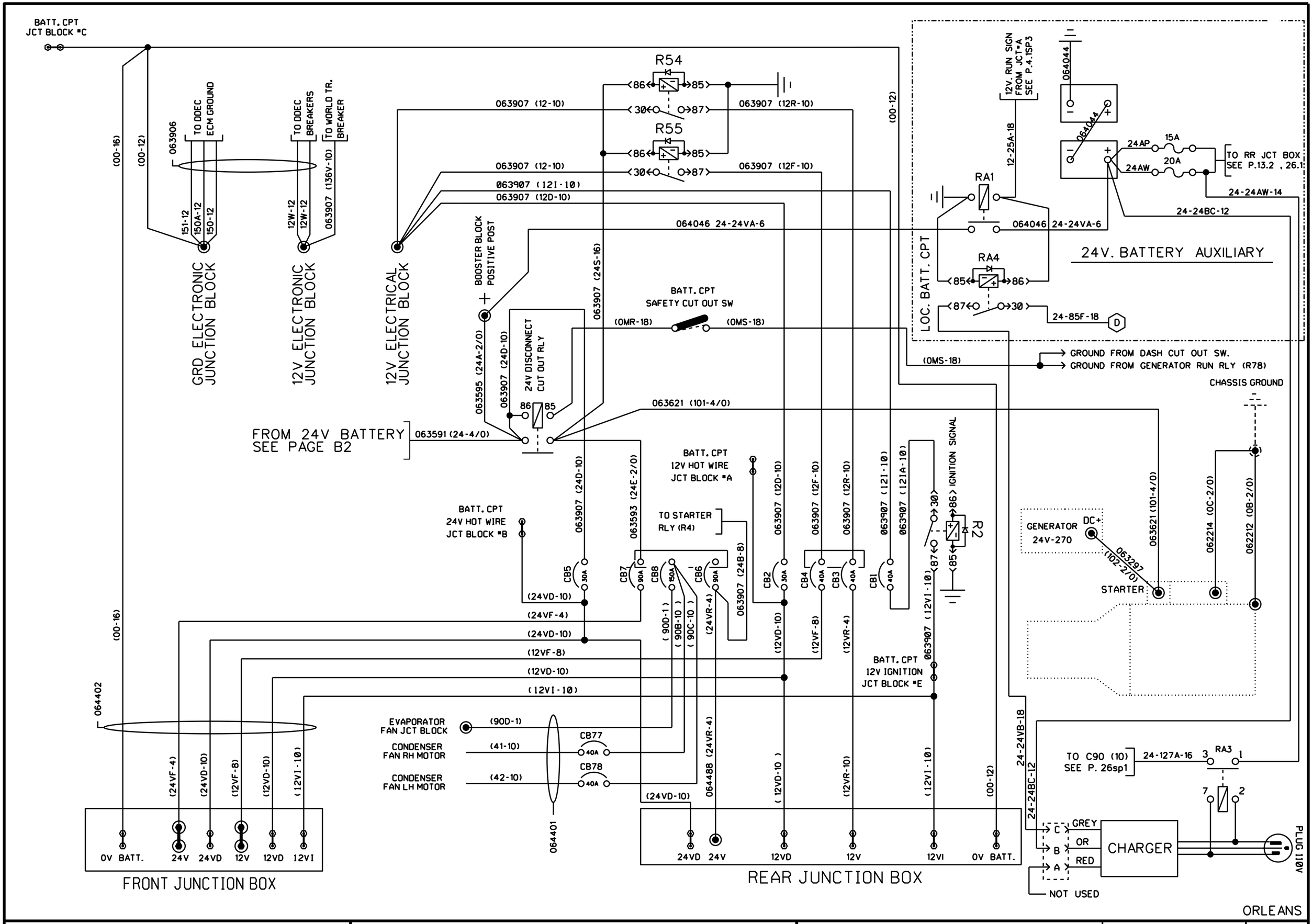

PREVOST	WIRING DIAGRAM	NO: D060902	PAGE: B1sp1	REVISION 00

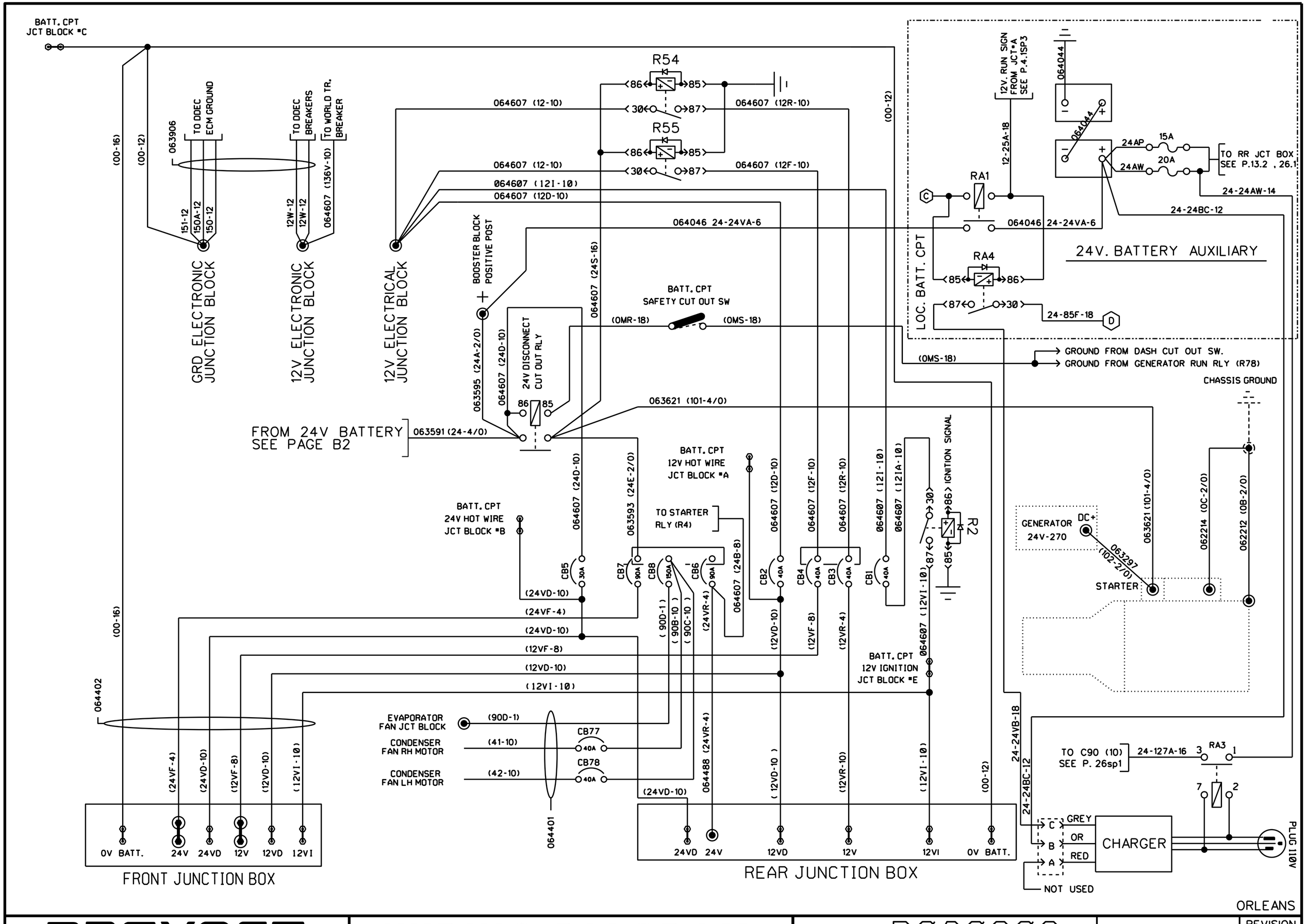

PREVOST	WIRING DIAGRAM	NO: D060902	PAGE: B1sp1	REVISION 08

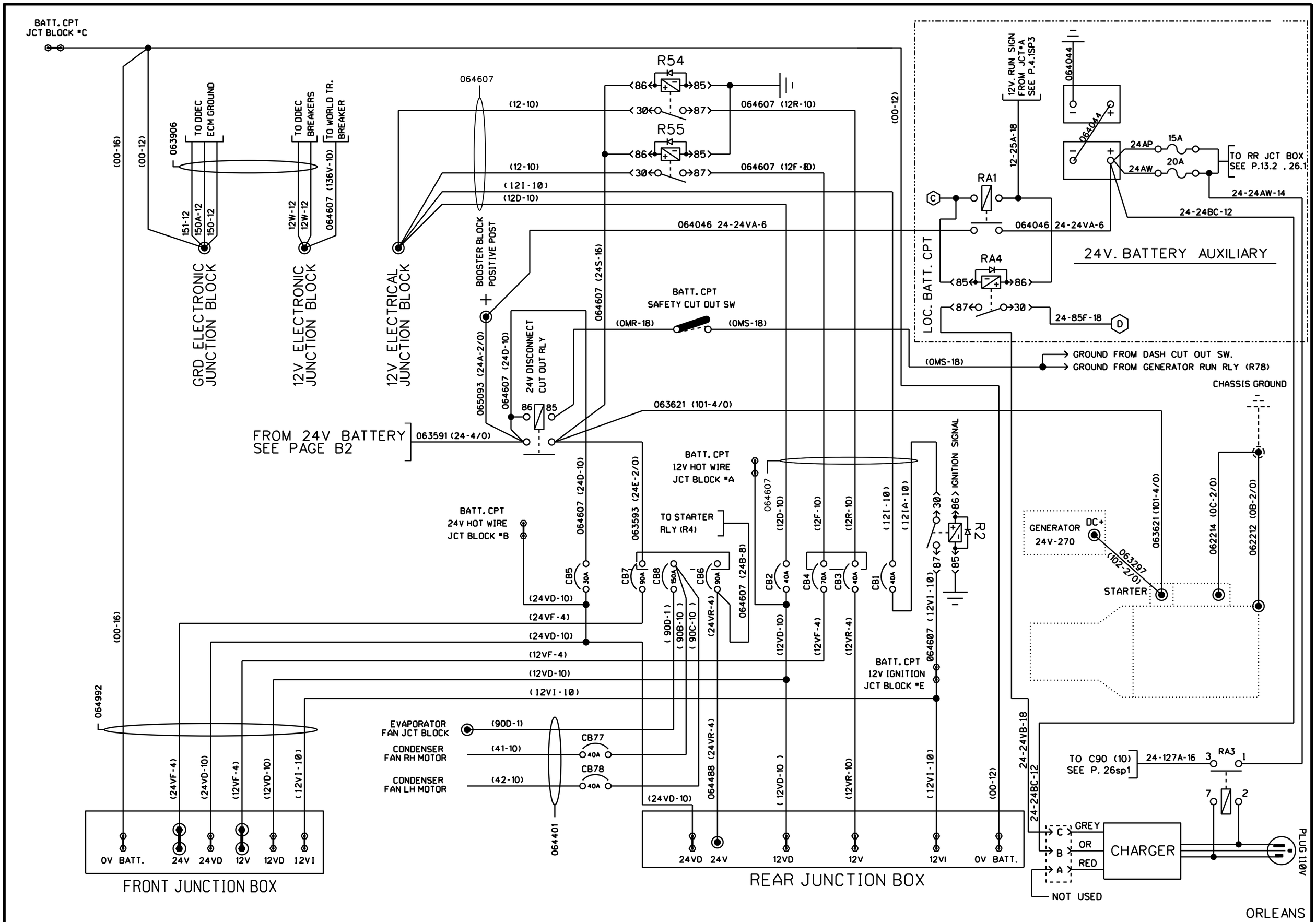

PREVOST	WIRING DIAGRAM	NO: D060902	PAGE: B1sp1	REVISION 24

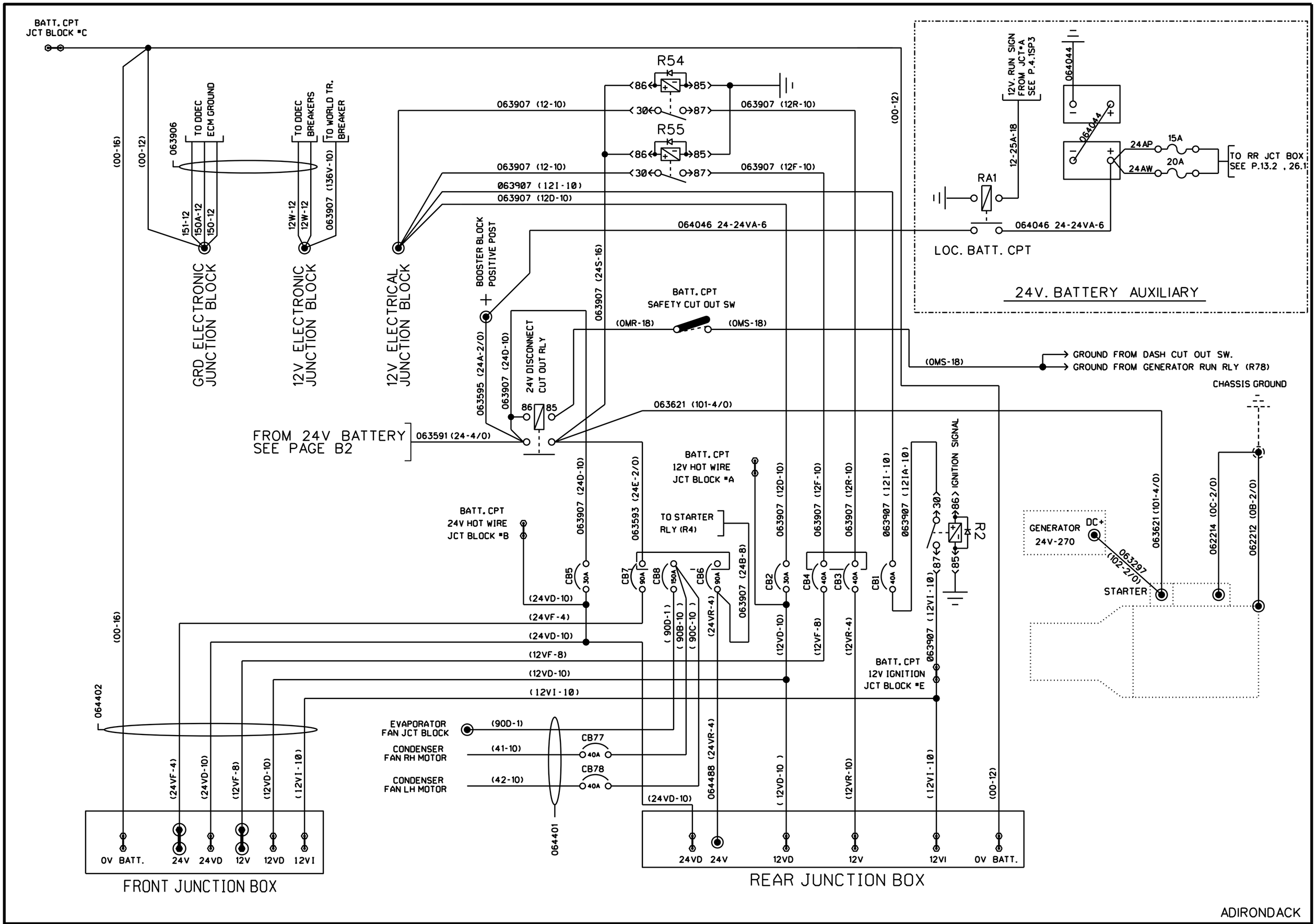

ADIRONDACK

PREVOST	WIRING DIAGRAM	NO: D060902	PAGE: B1sp2	REVISION 00

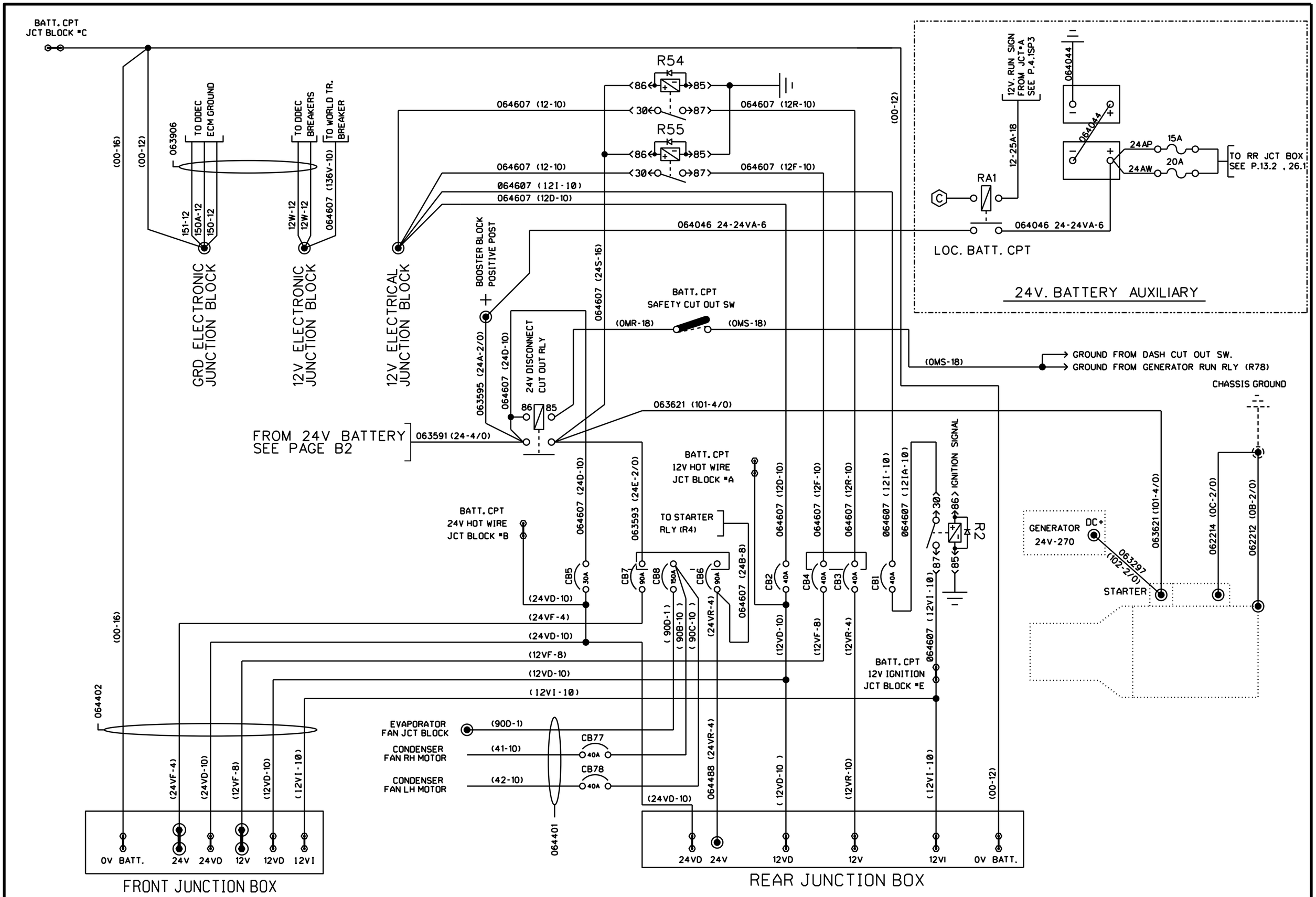

ADIRONDACK

PREVOST	WIRING DIAGRAM	NO: D060902	PAGE: B1sp2	REVISION 08

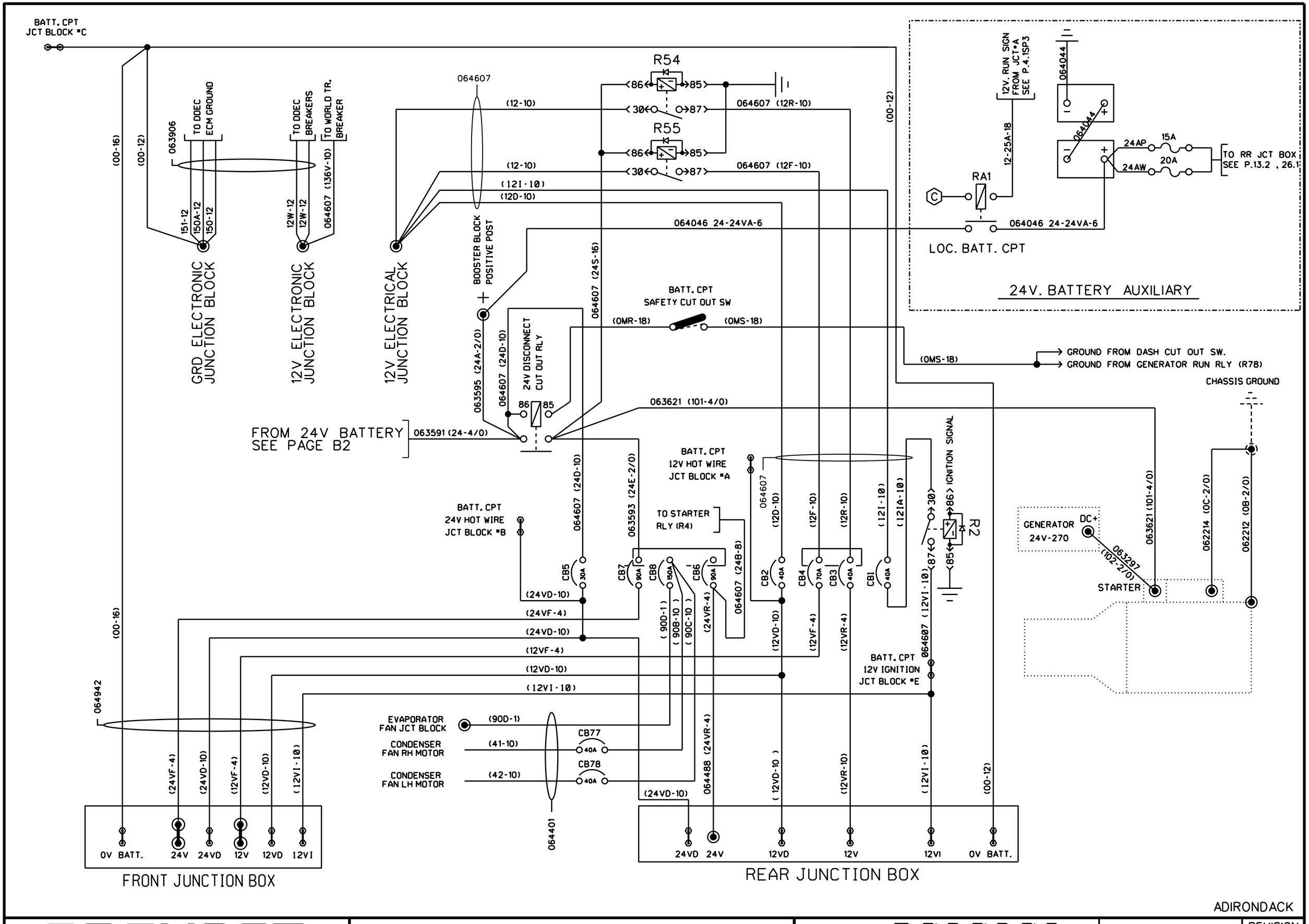

PREVOST	WIRING DIAGRAM	NO: D060902	PAGE: B1sp2	REVISION 15

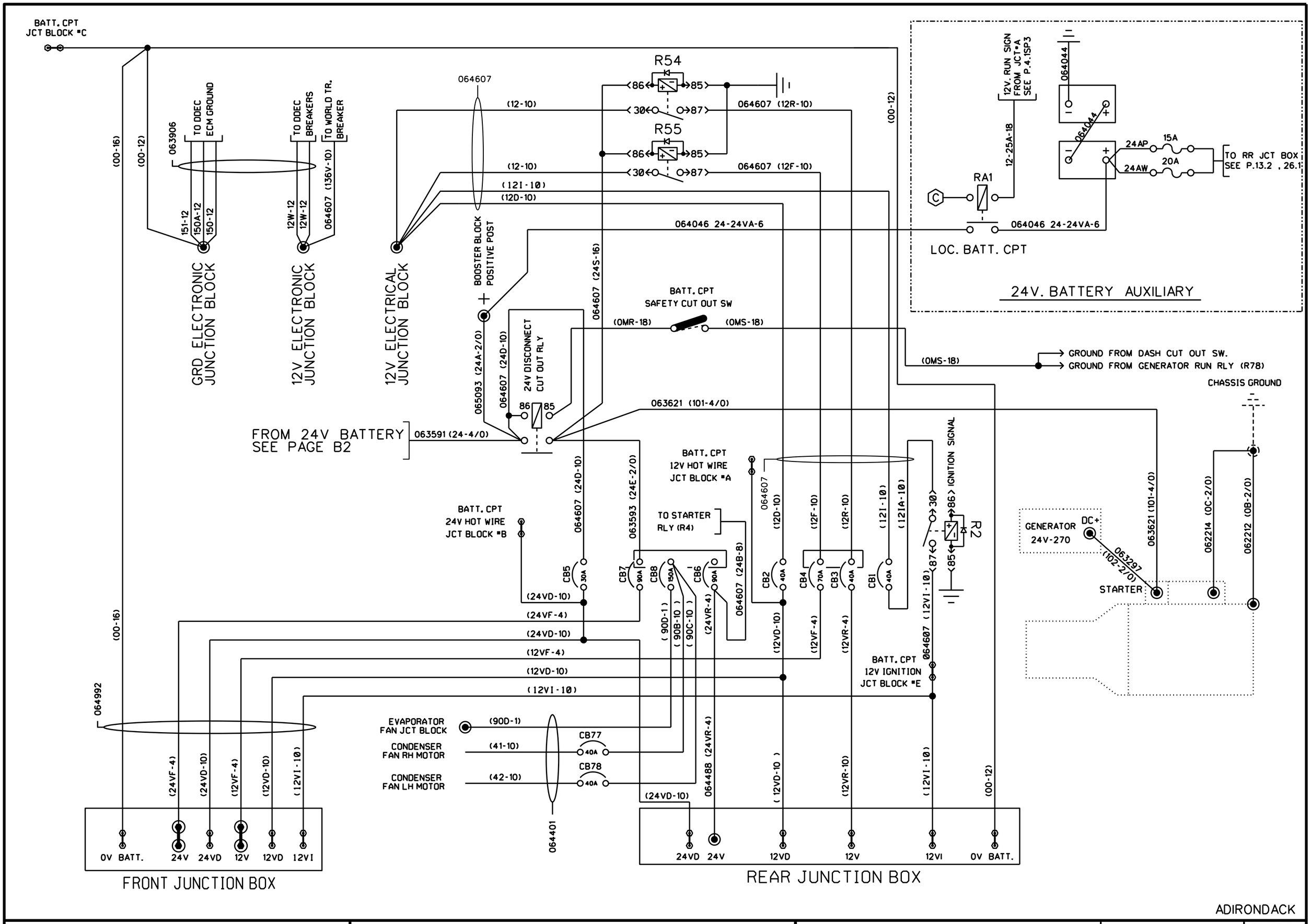

ADIRONDACK

PREVOST	WIRING DIAGRAM	NO: D060902	PAGE: B1sp2	REVISION 24

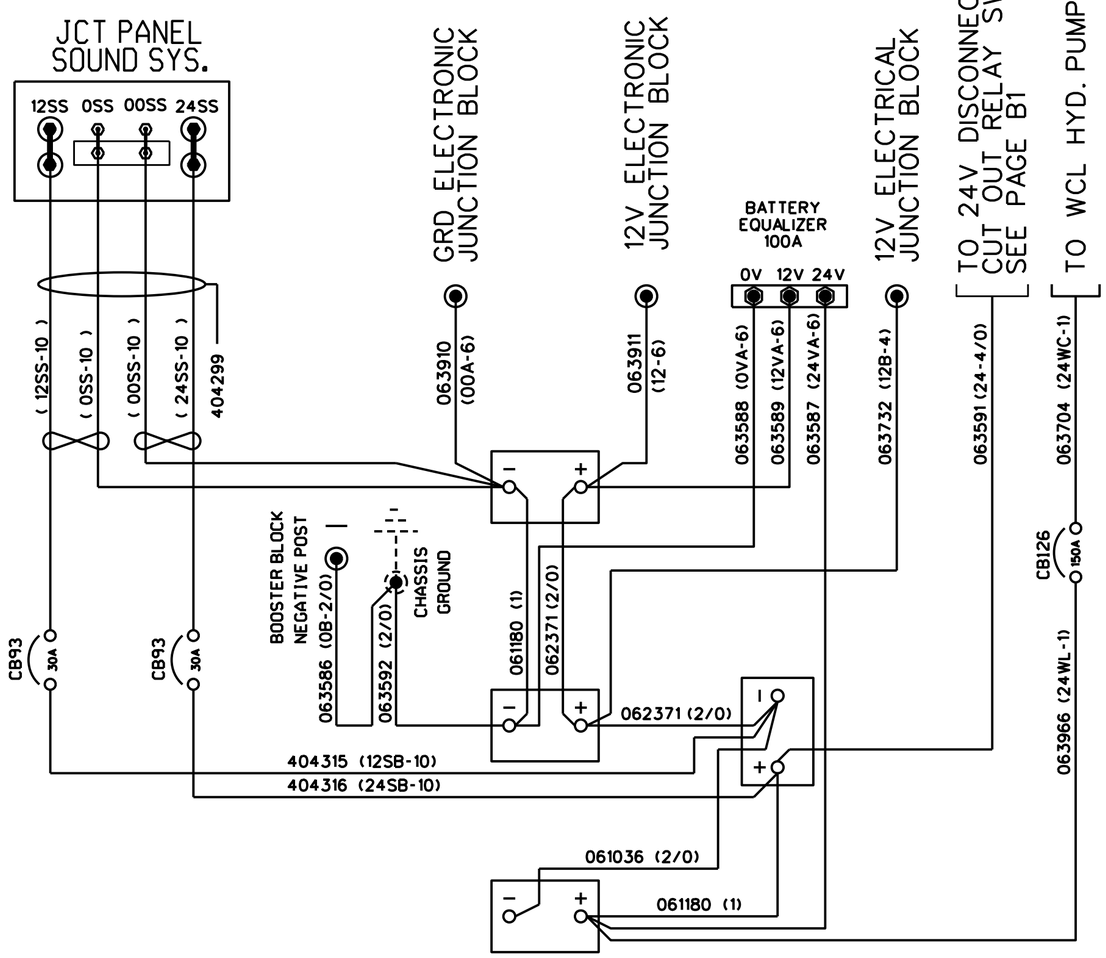

STANDARD BATTERIES

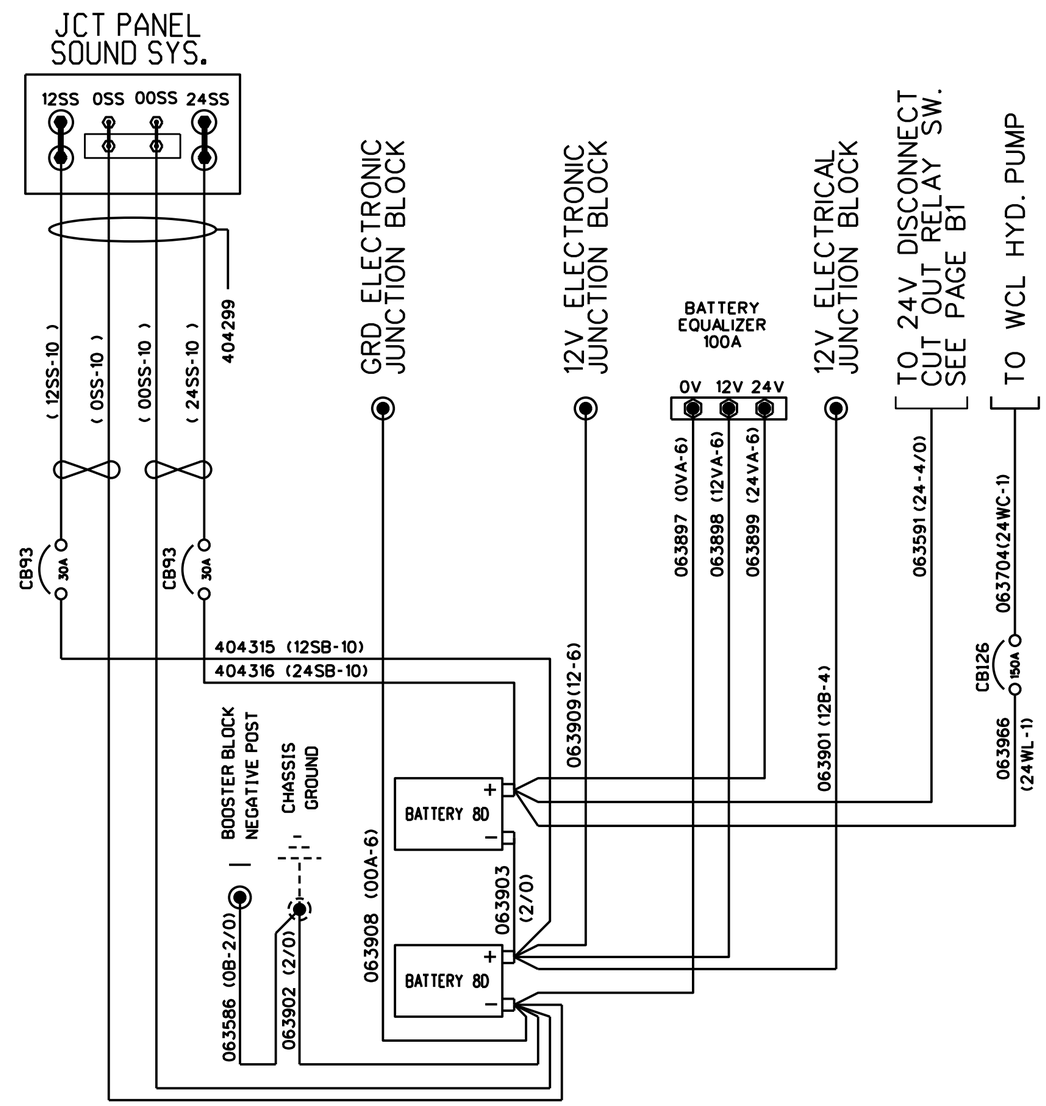

8D BATTERIES

PREVOST	WIRING DIAGRAM	NO: D060902	PAGE: B2	REVISION 00

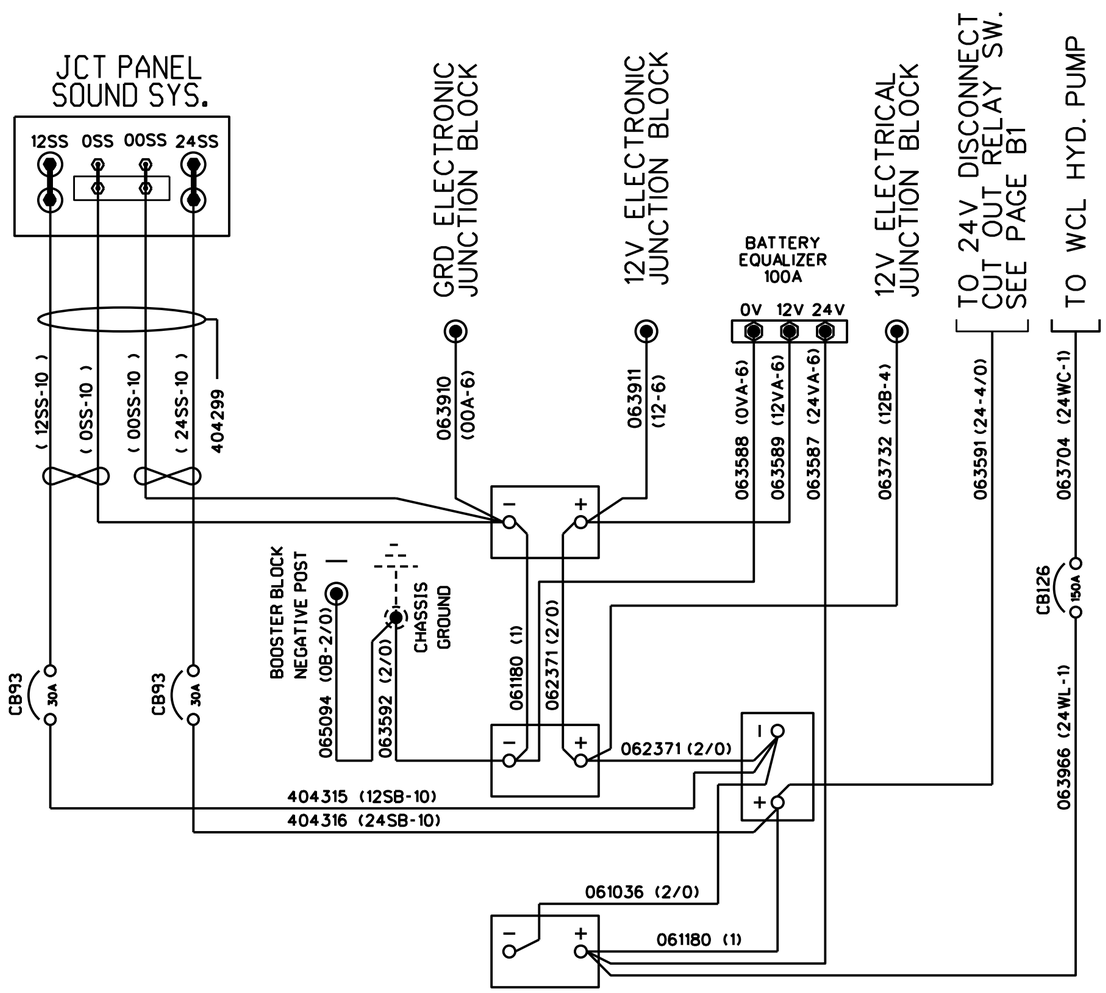

STANDARD BATTERIES

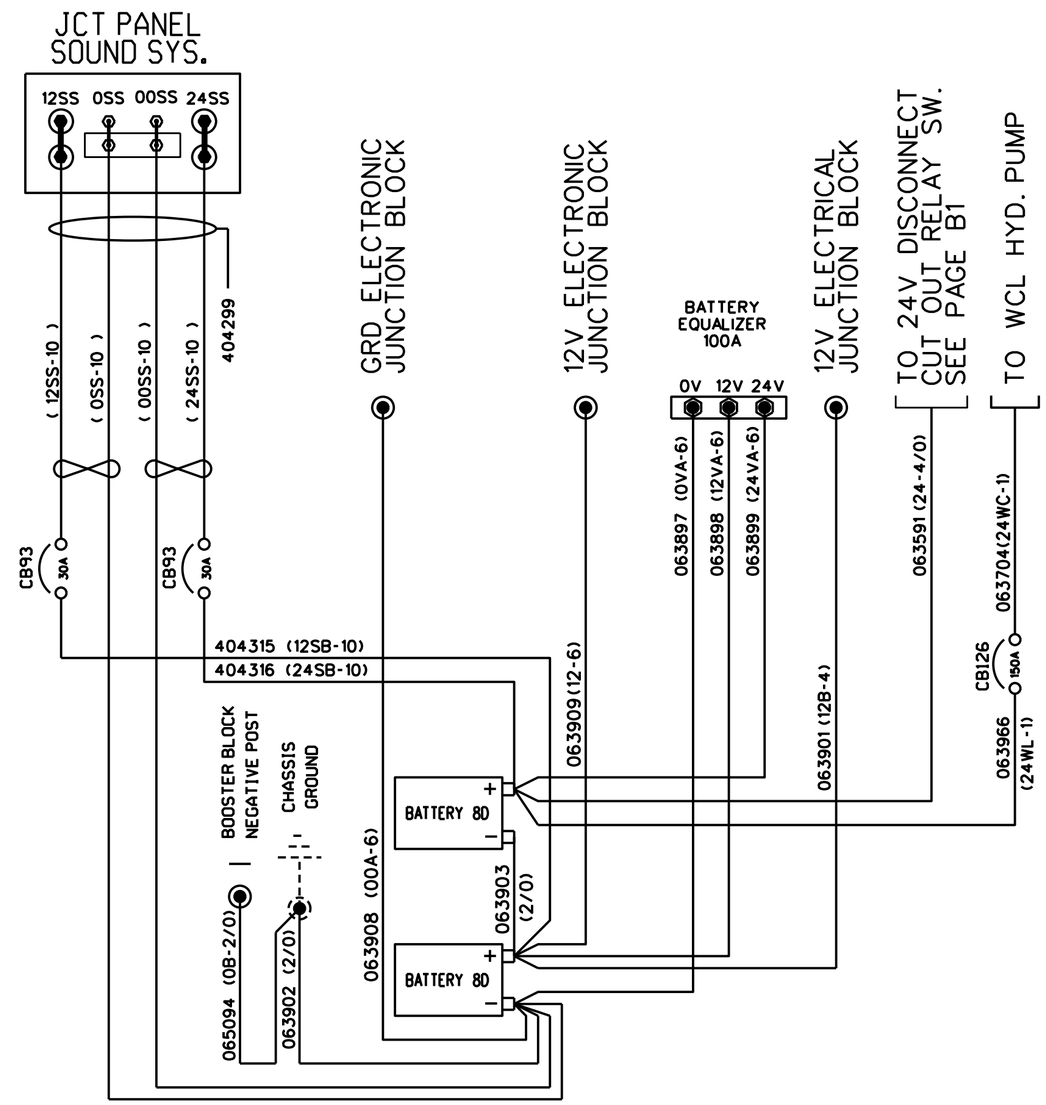

8D BATTERIES

PREVOST	WIRING DIAGRAM	NO: D060902	PAGE: B2	REVISION 24

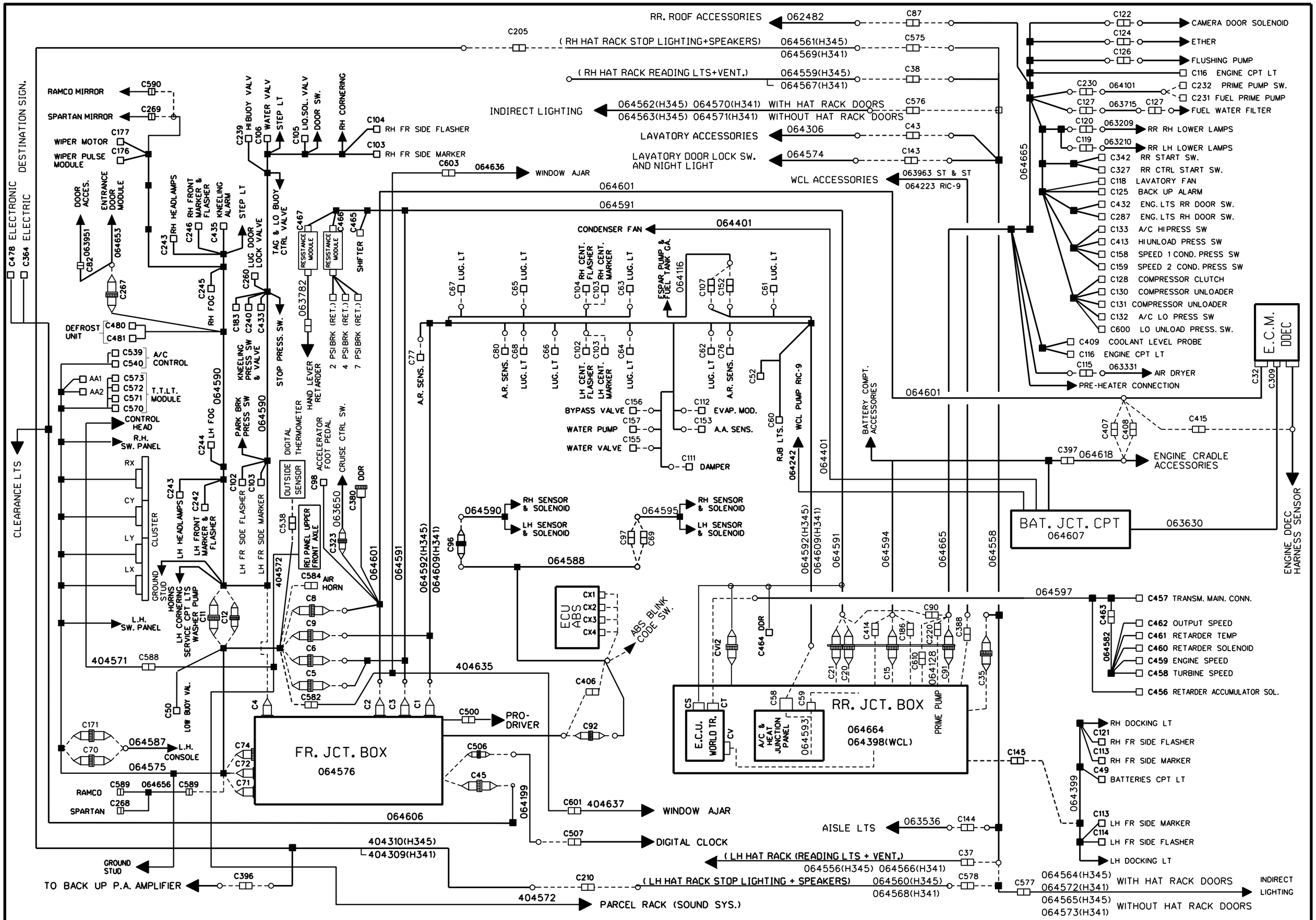

PREVOST	WIRING DIAGRAM	NO: D060902	PAGE: C	REVISION 01

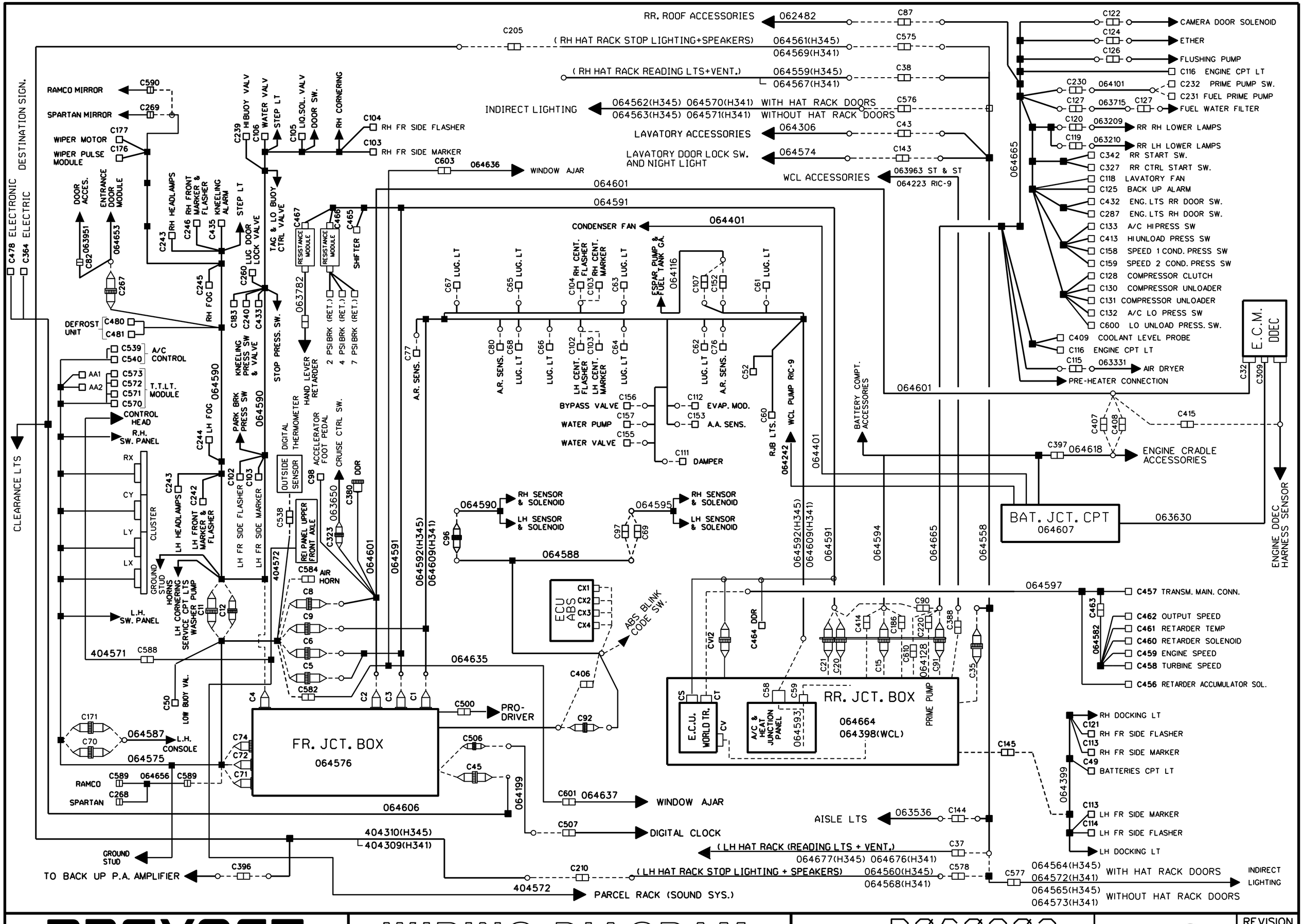

PREVOST	WIRING DIAGRAM	NO: D060902	PAGE: C	REVISION 01

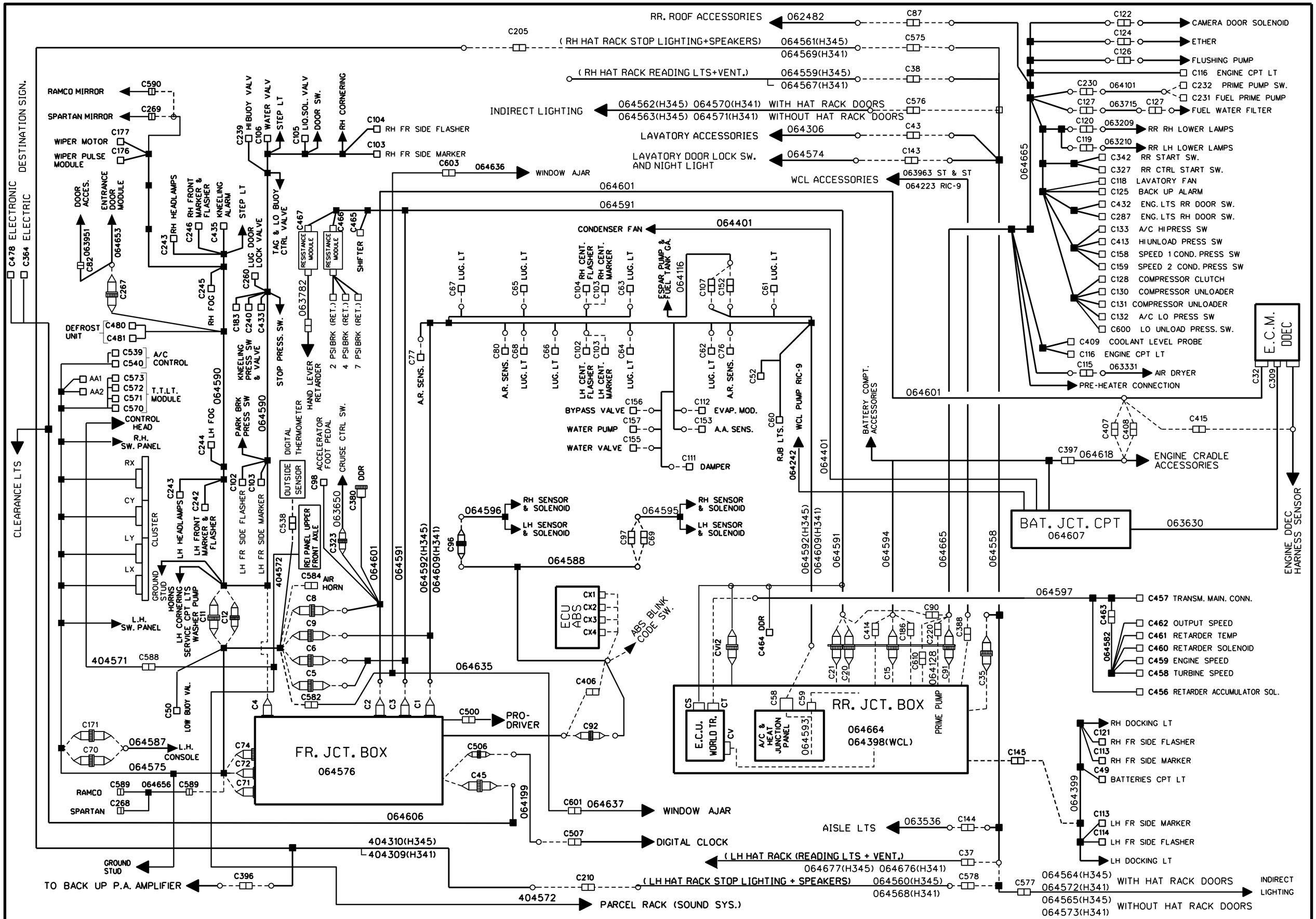

PREVOST	WIRING DIAGRAM	NO: D060902	PAGE: C	REVISION 02

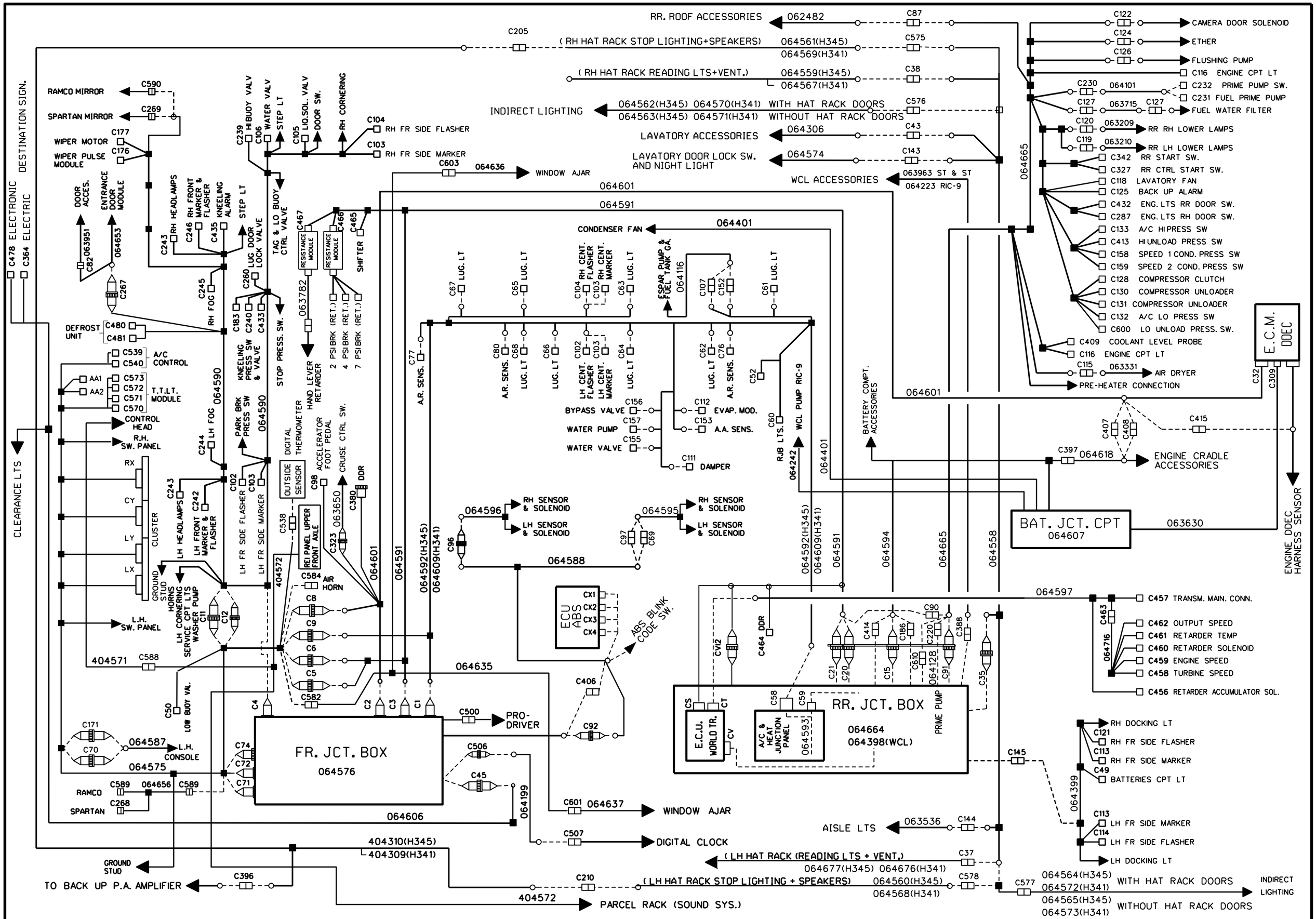

PREVOST	WIRING DIAGRAM	NO: D060902	PAGE: C	REVISION 03

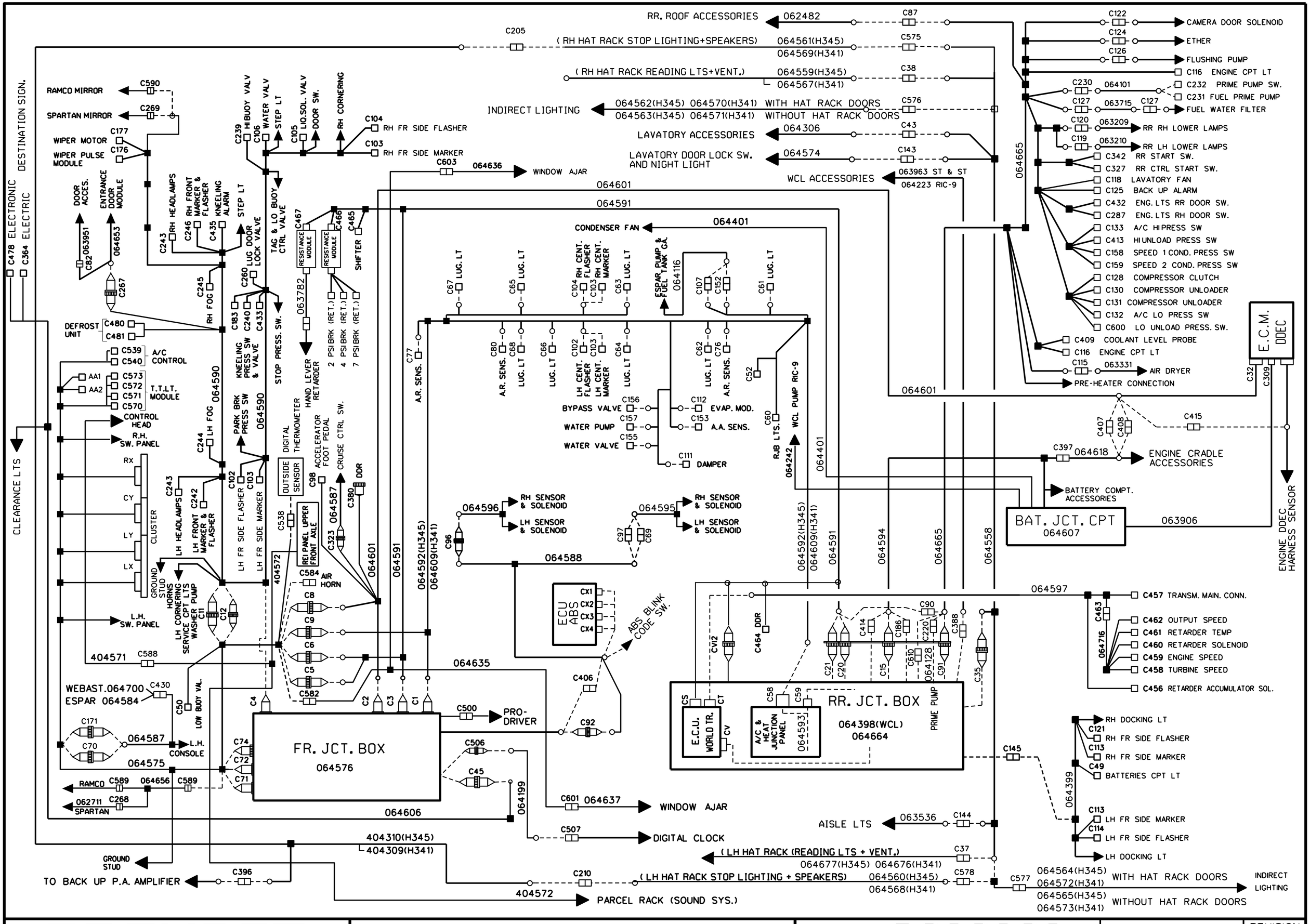

PREVOST	WIRING DIAGRAM	NO: D060902	PAGE: C	REVISION 04

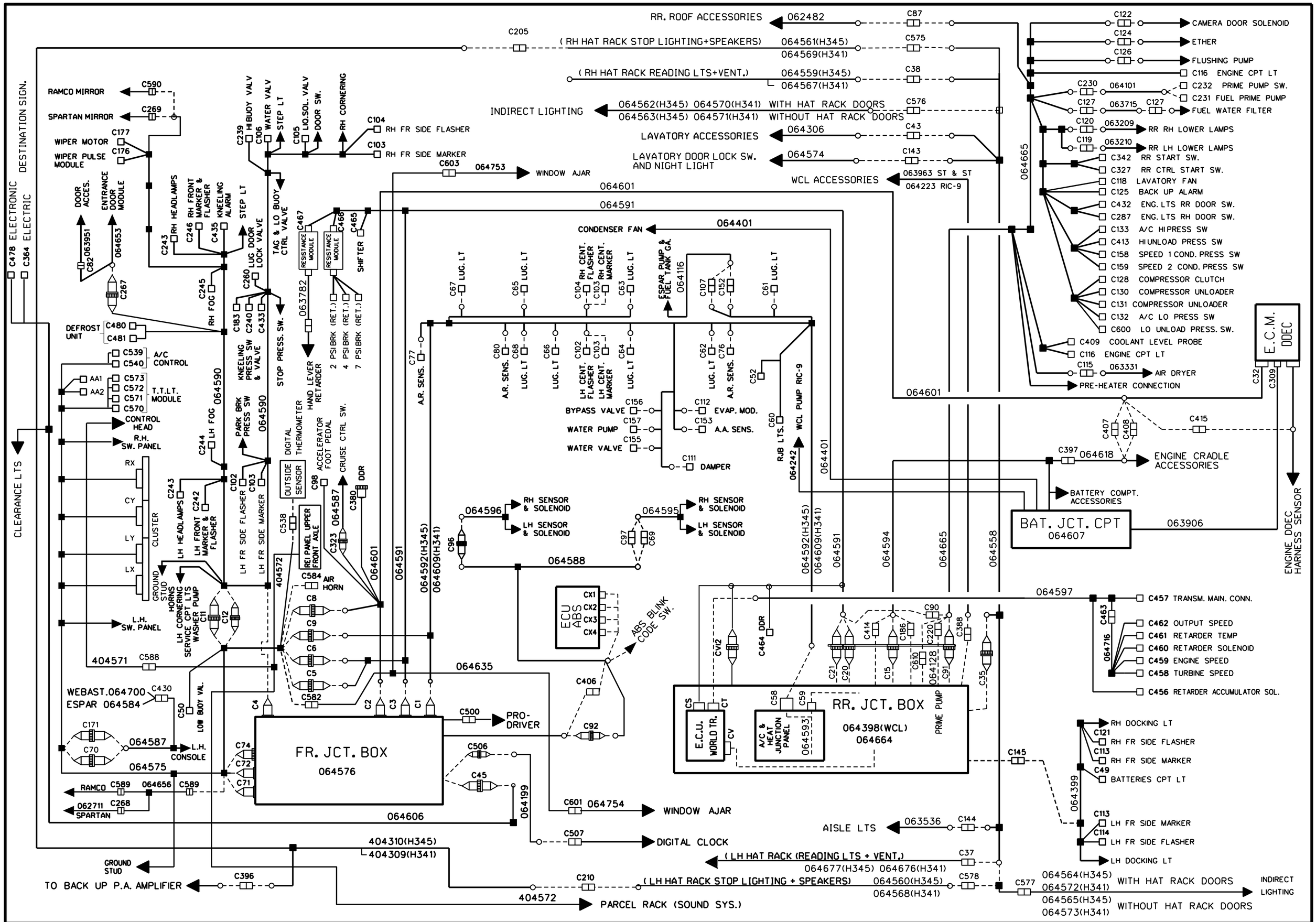

PREVOST	WIRING DIAGRAM	NO: D060902	PAGE: C	REVISION 05

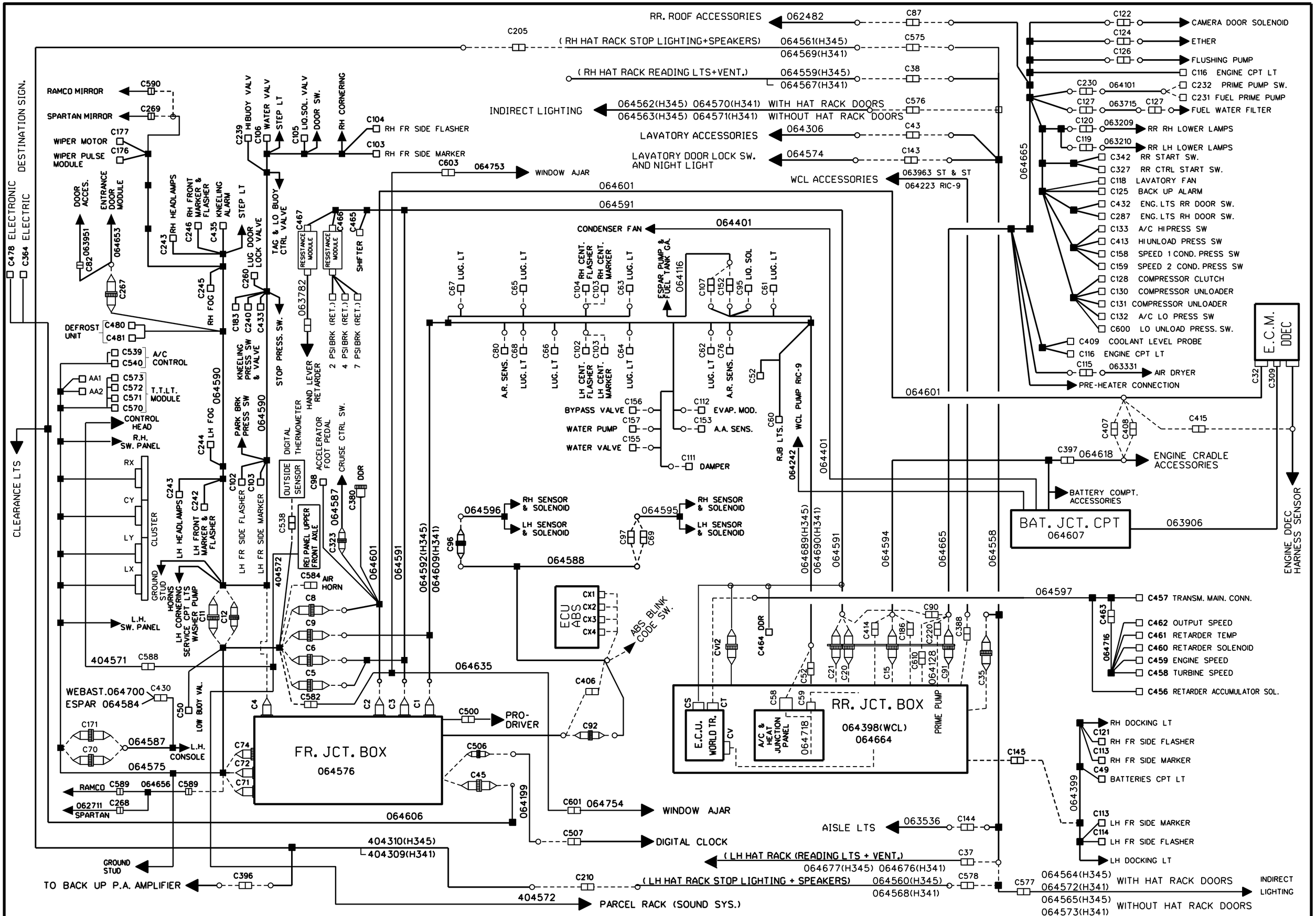

PREVOST	WIRING DIAGRAM	NO: D060902	PAGE: C	REVISION 06

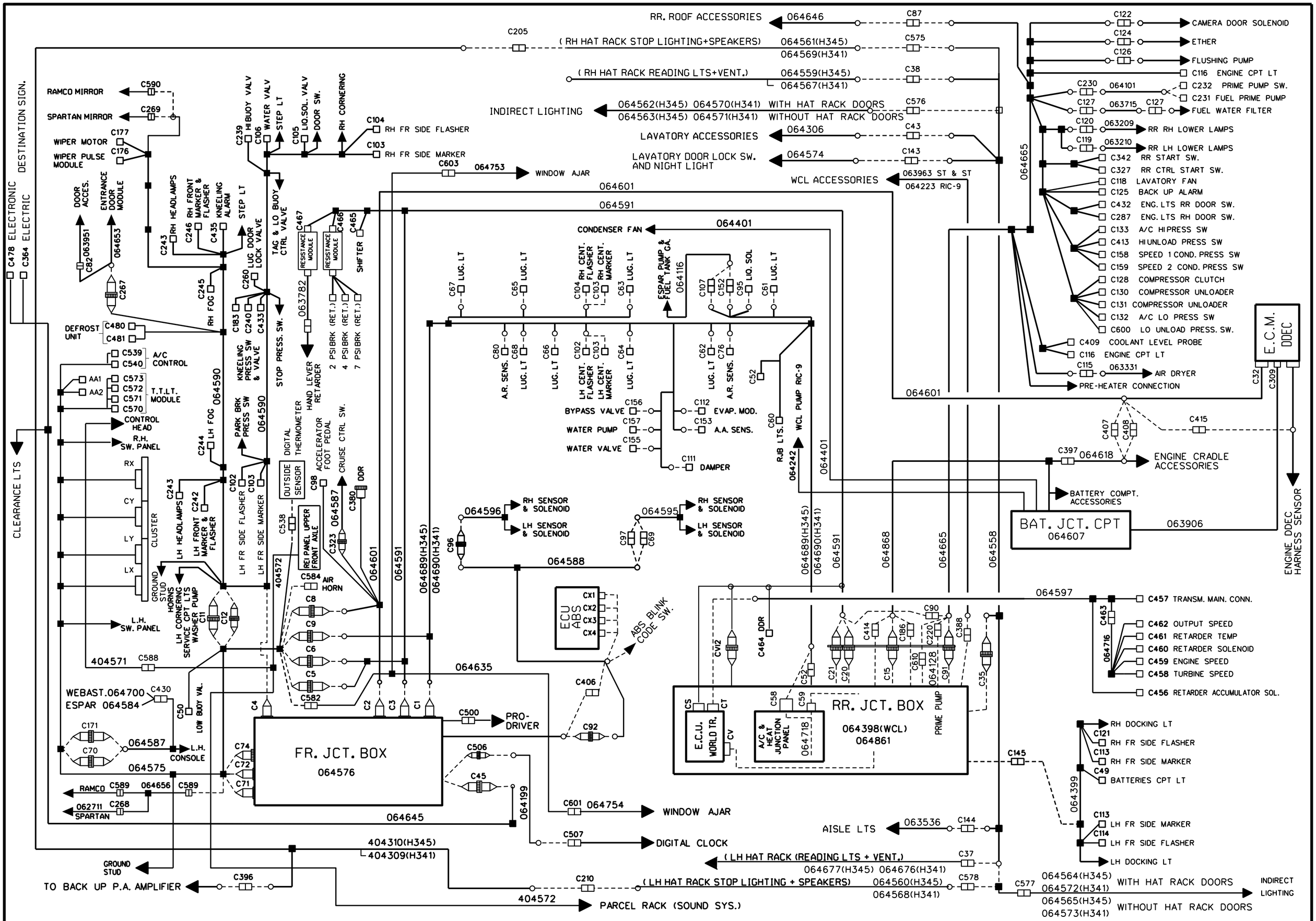

PREVOST	WIRING DIAGRAM	NO: D060902	PAGE: C	REVISION 09

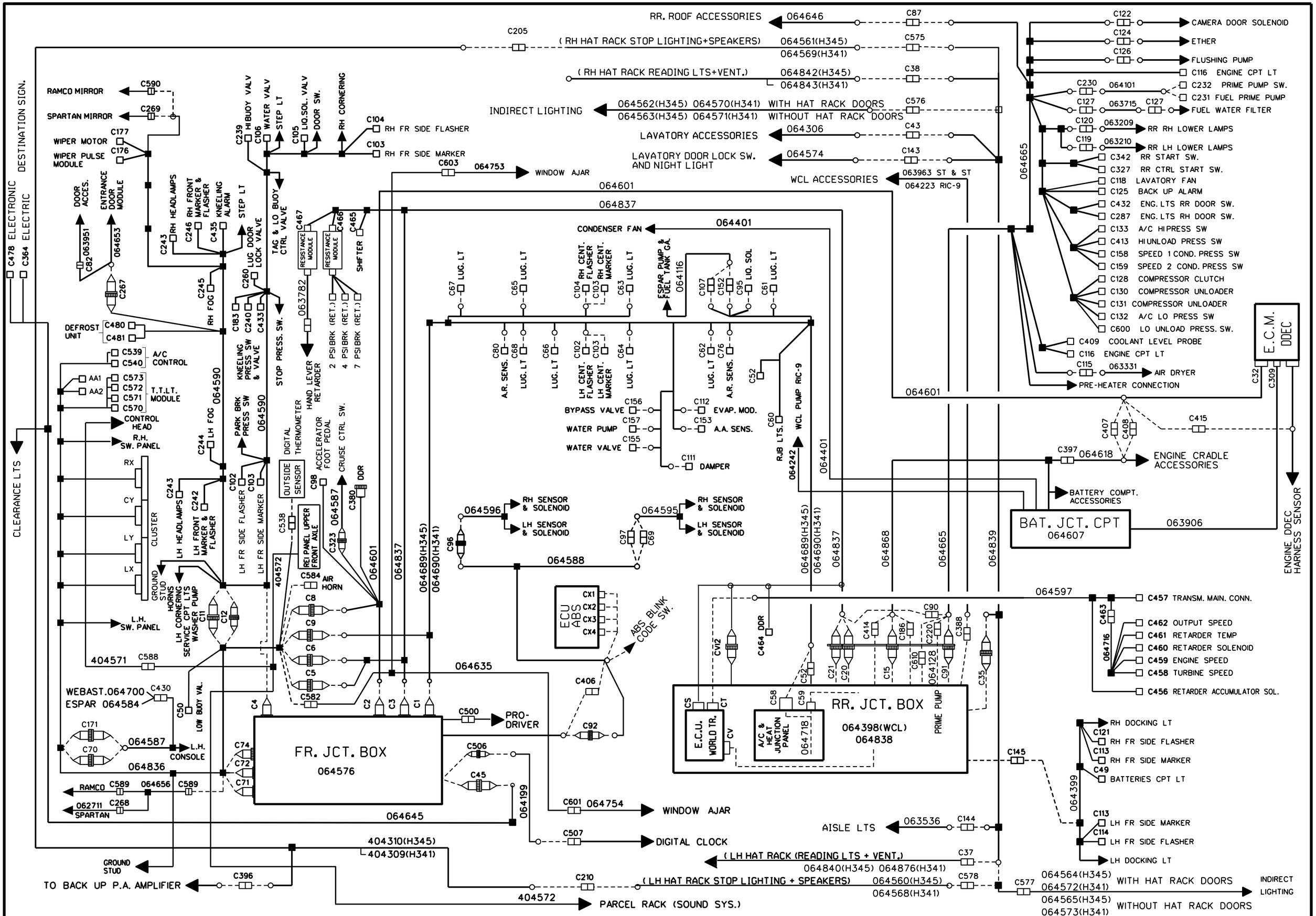

PREVOST	WIRING DIAGRAM	NO: D060902	PAGE: C	REVISION 10

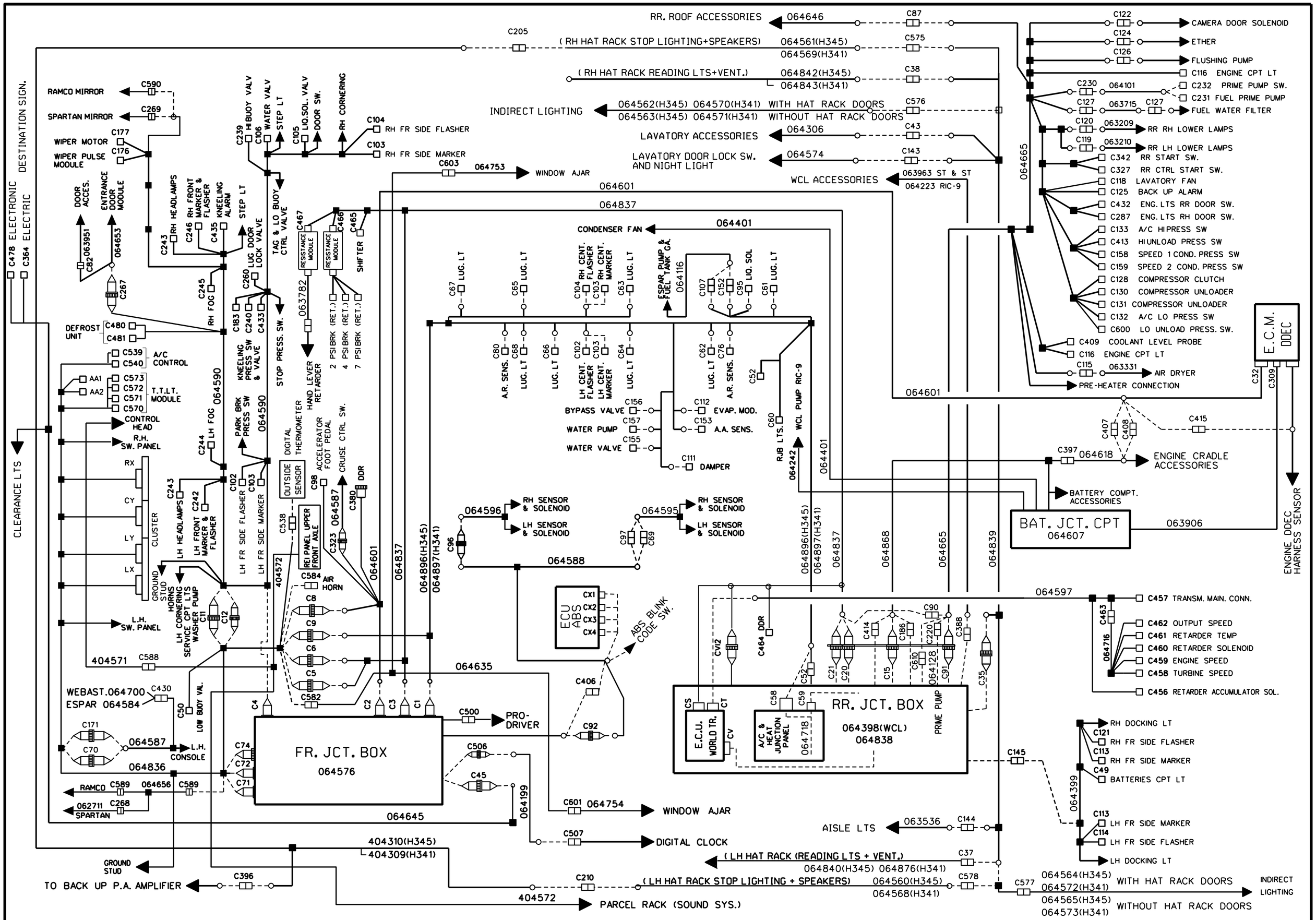

PREVOST	WIRING DIAGRAM	NO: D060902	PAGE: C	REVISION 11

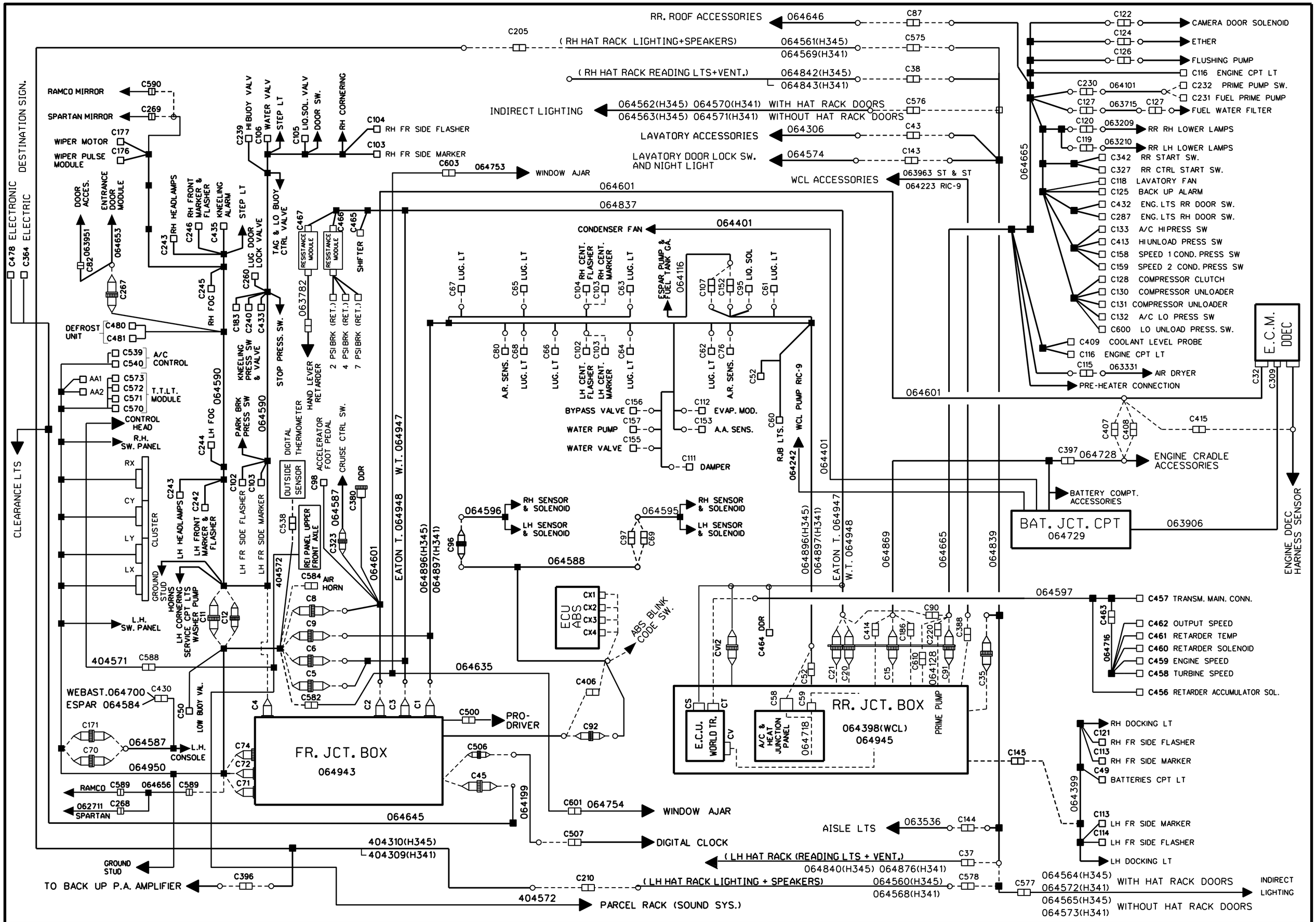

PREVOST	WIRING DIAGRAM	NO: D060902	PAGE: C	REVISION 16

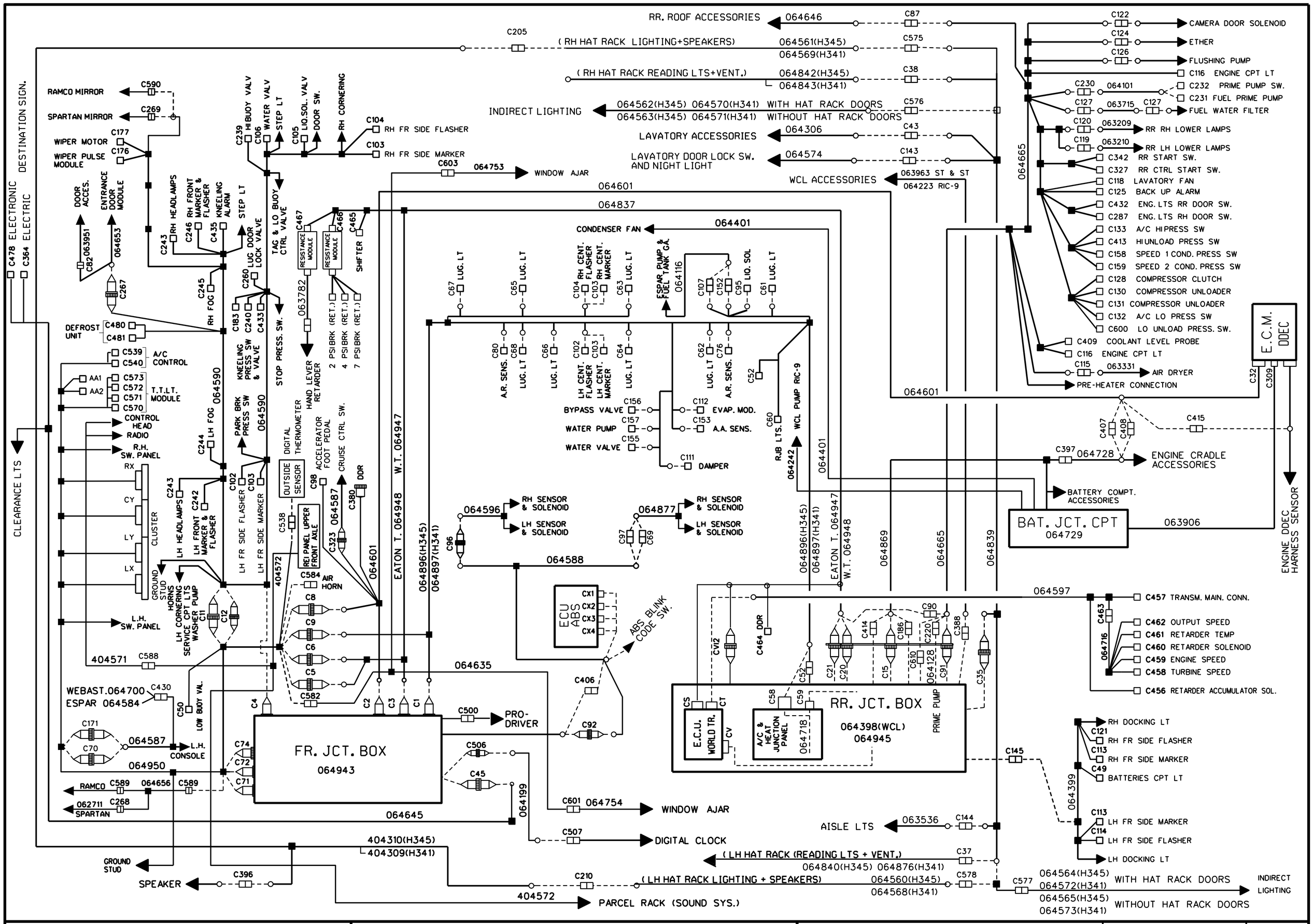

PREVOST	WIRING DIAGRAM	NO: D060902	PAGE: C	REVISION 17

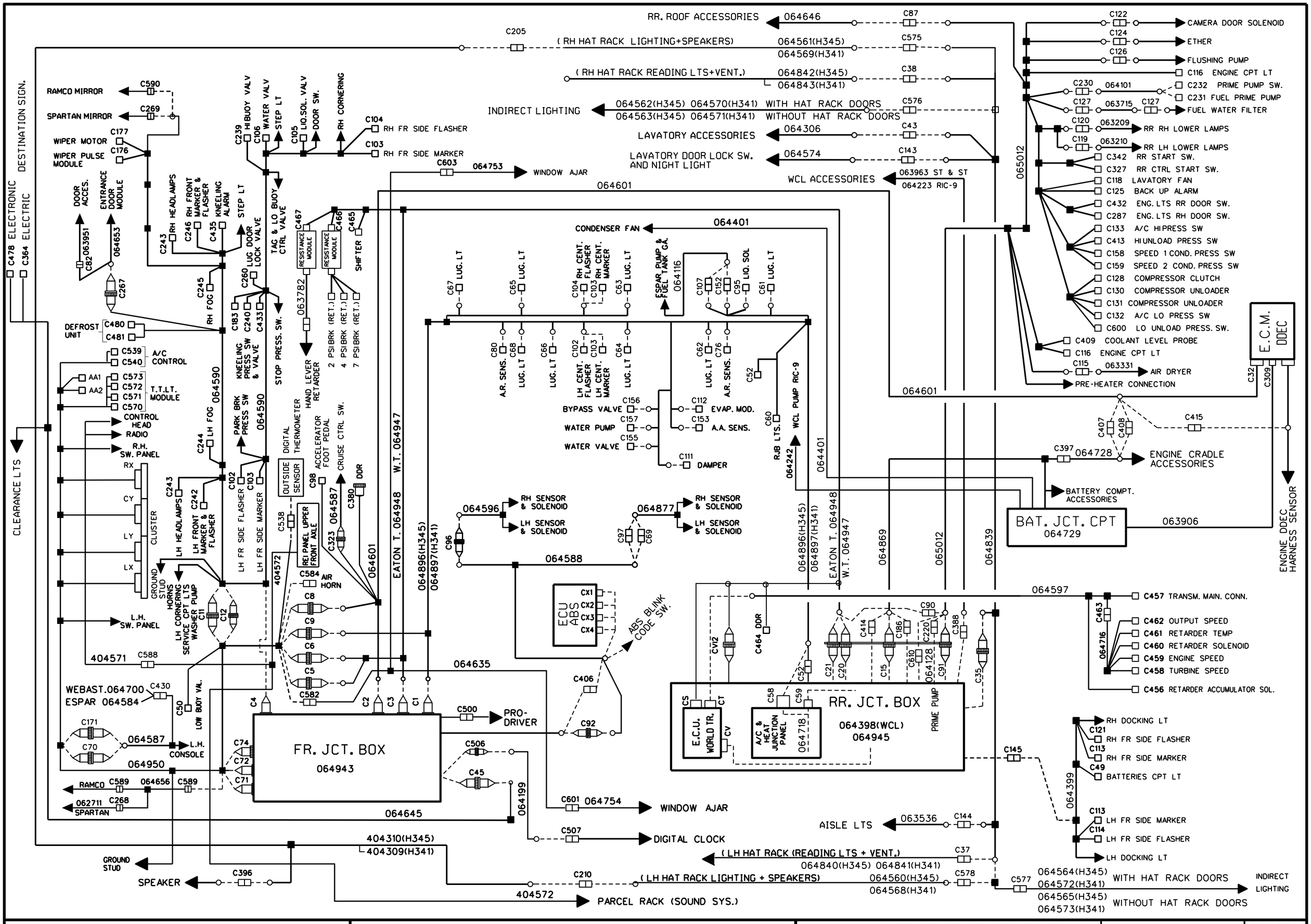

PREVOST	WIRING DIAGRAM	NO: D060902	PAGE: C	REVISION 20

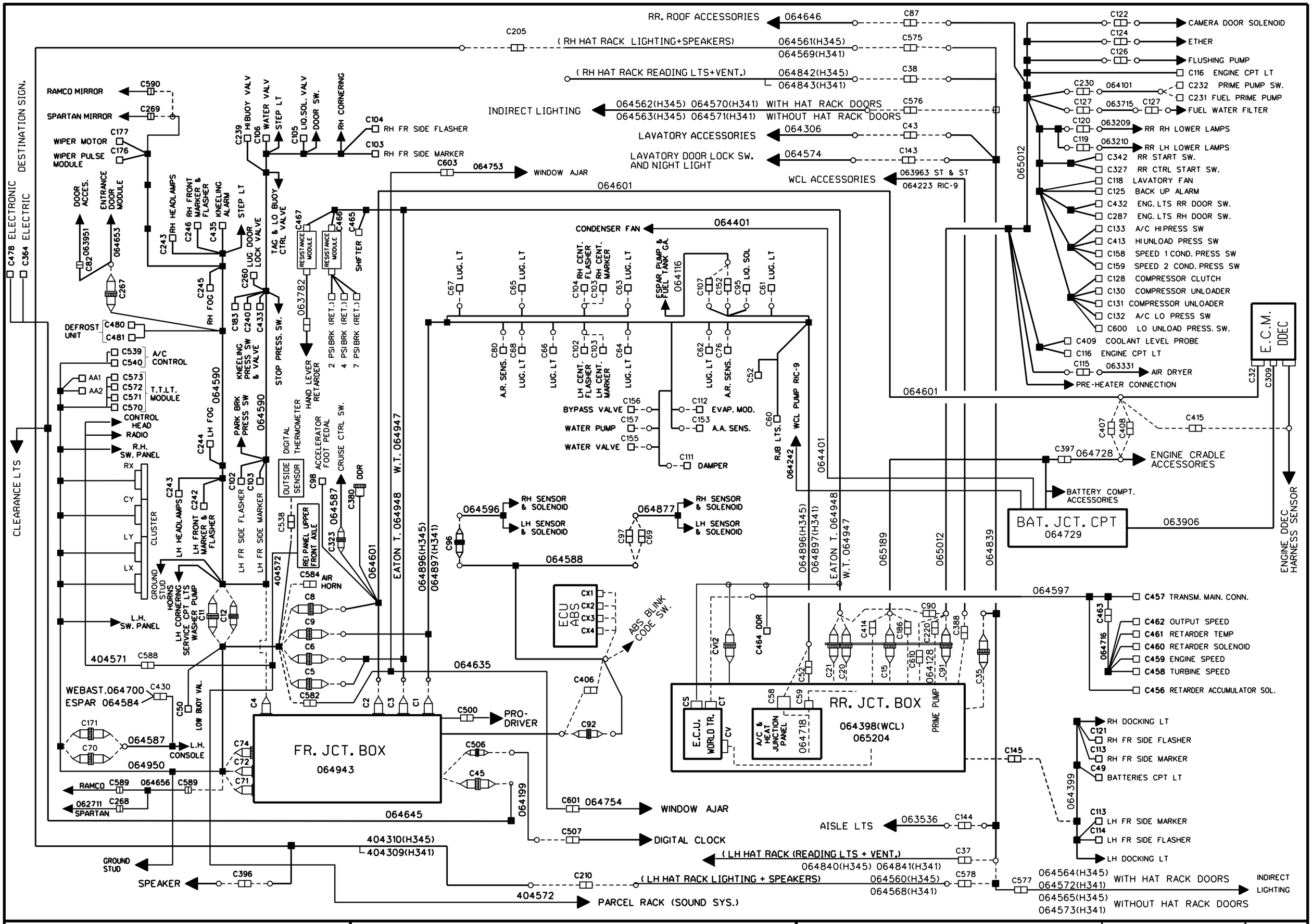

PREVOST	WIRING DIAGRAM	NO: D060902	PAGE: C	REVISION 01

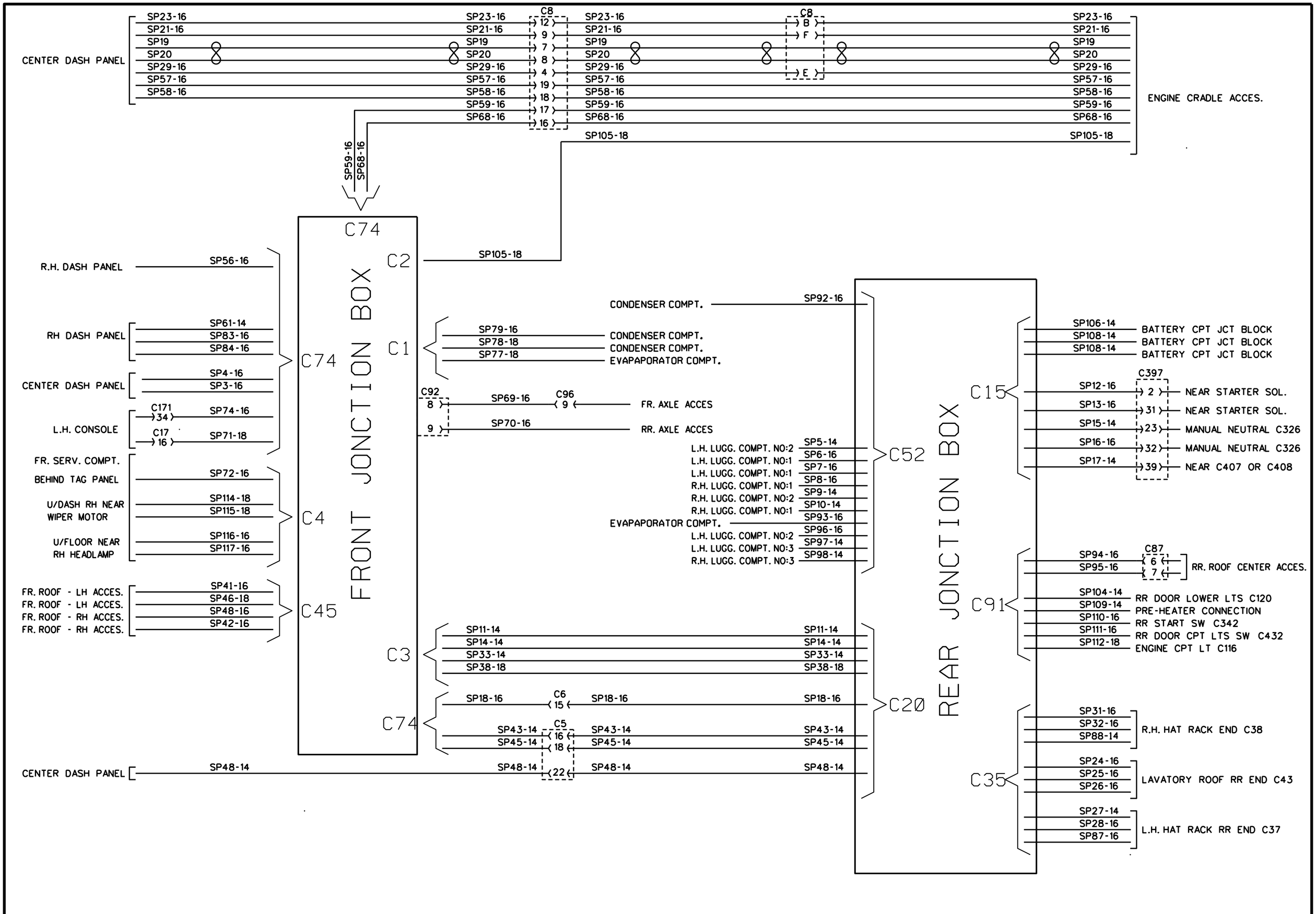

PREVOST	WIRING DIAGRAM	NO: D060902	PAGE: D	REVISION 00

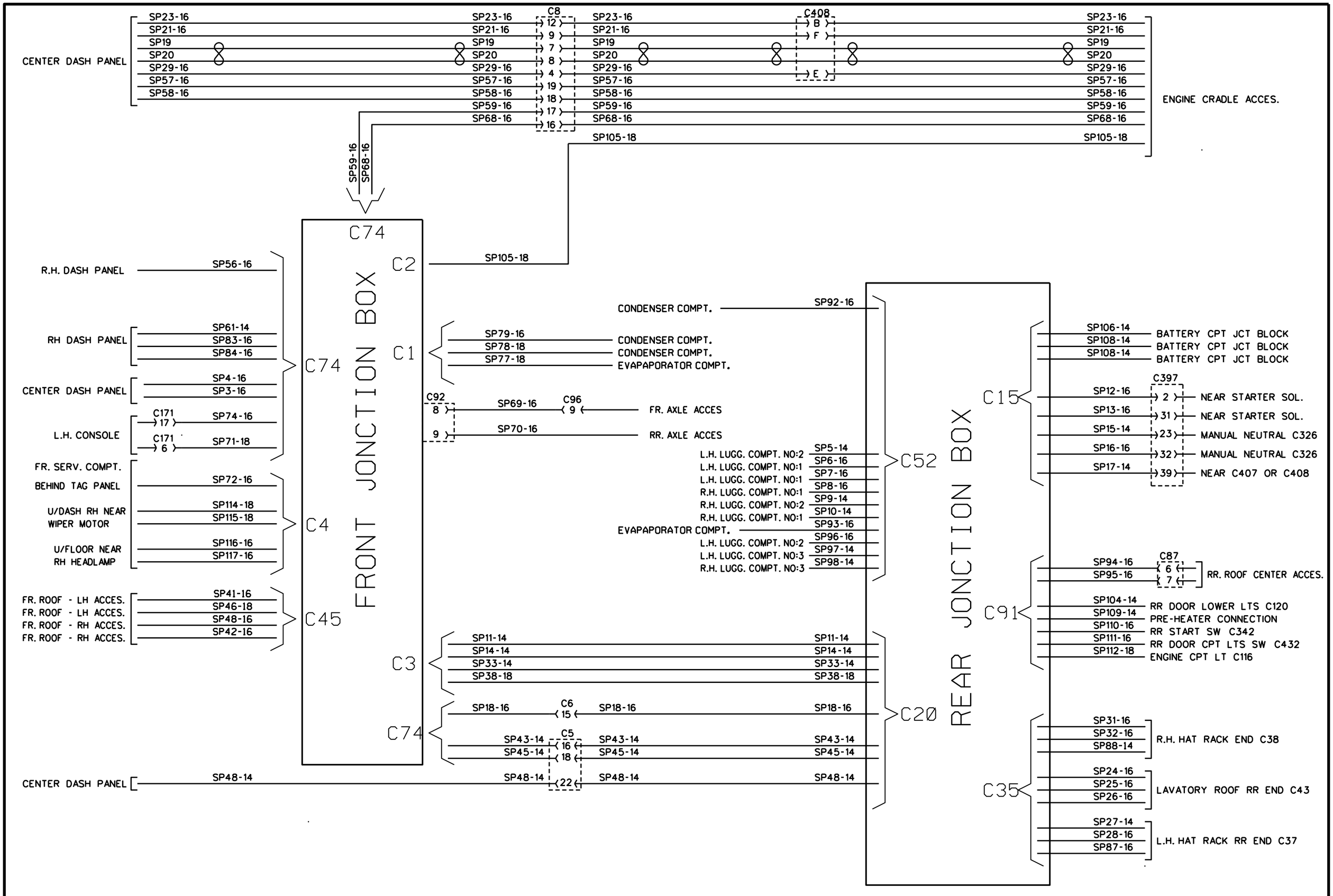

PREVOST	WIRING DIAGRAM	NO: D060902	PAGE: D	REVISION 01

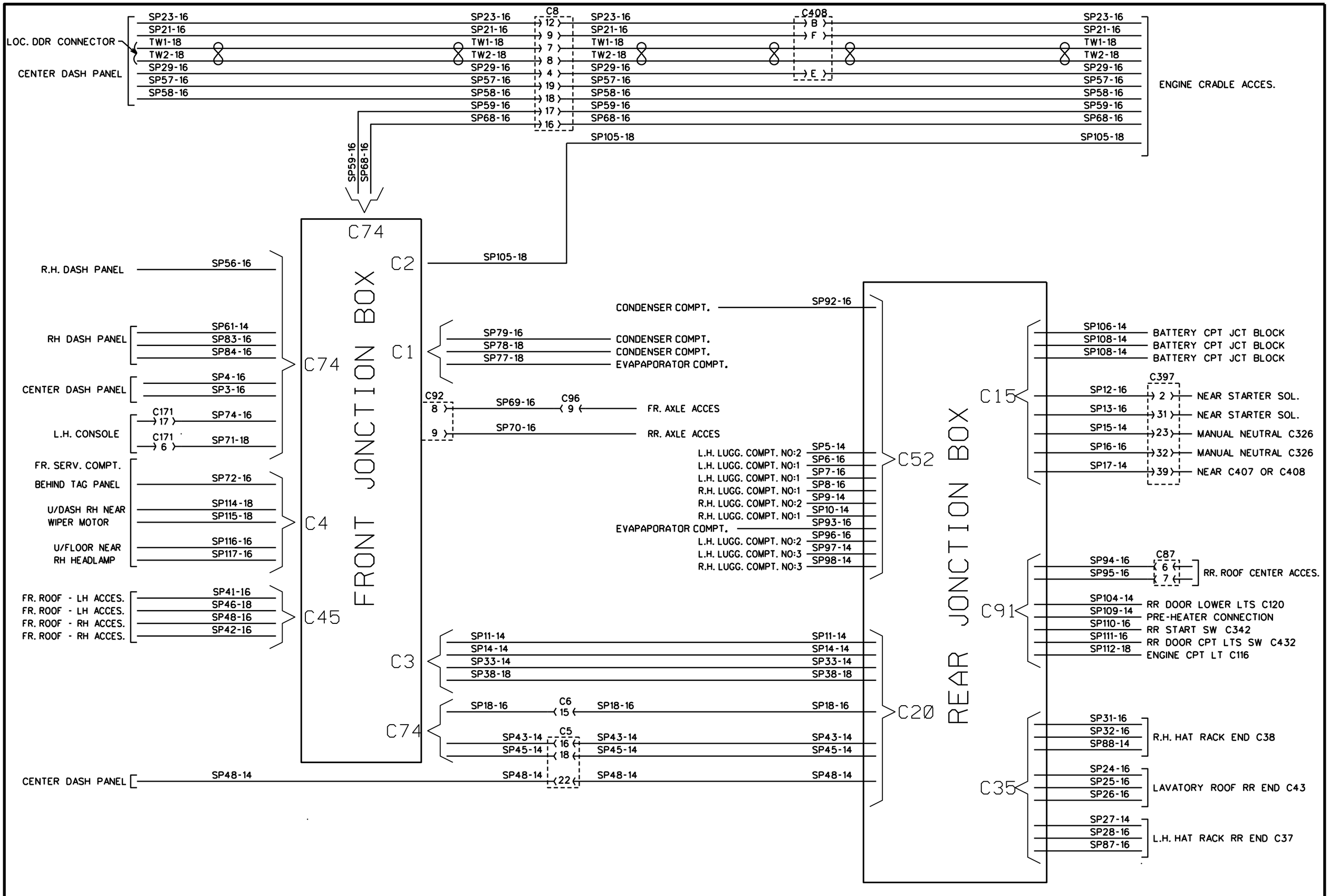

PREVOST	WIRING DIAGRAM	NO: D060902	PAGE: D	REVISION 17

CIRCUIT NUMBER CODE

No.	DESCRIPTION
B A	INTERIOR LTS-110V FLUORESCENT
B B	INTERIOR LTS-110V FLUORESCENT
D 1	SOUND SYSTEM-FR RH SPEAKER
D 2	SOUND SYSTEM-FR RH SPEAKER
D 3	SOUND SYSTEM-FR RH SPEAKER
D 4	SOUND SYSTEM-RR RH SPEAKER
D 5	SOUND SYSTEM-RR RH SPEAKER
D 6	SOUND SYSTEM-RR RH SPEAKER
D 7	SOUND SYSTEM-RR RH SPEAKER
D 8	SOUND SYSTEM-RR RH SPEAKER
D 3 4	SOUND SYSTEM-RR RH SPEAKER
D 6 7	SOUND SYSTEM-RR RH SPEAKER
G 1	SOUND SYSTEM-FR LH SPEAKER
G 2	SOUND SYSTEM-FR LH SPEAKER
G 3	SOUND SYSTEM-FR LH SPEAKER
G 4	SOUND SYSTEM-RR LH SPEAKER
G 5	SOUND SYSTEM-RR LH SPEAKER
G 6	SOUND SYSTEM-RR LH SPEAKER
G 7	SOUND SYSTEM-RR LH SPEAKER
G 8	SOUND SYSTEM-RR LH SPEAKER
G 3 4	SOUND SYSTEM-RR LH SPEAKER
G 6 7	SOUND SYSTEM-RR LH SPEAKER
L 1 A	INTERIOR LTS-110V FLUORESCENT
L 1 B	INTERIOR LTS-110V FLUORESCENT
L 2 A	INTERIOR LTS-110V FLUORESCENT
L 2 B	INTERIOR LTS-110V FLUORESCENT
L 8	ENG. BLK & WATER TANK-HEATER
L 9	ENG. BLK & WATER TANK-HEATER
L 0	110V RECEPTACLE- 110V FLUOR.
L 1	110V RECEPTACLE- 110V FLUOR.
L 2	110V RECEPTACLE- 110V FLUOR.
R A	INTERIOR LTS-110V FLUORESCENT
R B	INTERIOR LTS-110V FLUORESCENT
S H 1	SHIELD CHASSIS GRD
S H 2	SHIELD CHASSIS GRD
S H 3	SHIELD CHASSIS GRD
S H 4	SHIELD CHASSIS GRD
S P 2	SPARE-FJB TO FR SERV CPT
S P 3	SPARE-FJB TO CENTER DASH
S P 4	SPARE-FJB TO CENTER DASH
S P 5	SPARE-RJB TO LUGG CPT #2
S P 6	SPARE-RJB TO LUGG CPT #1
S P 7	SPARE-RJB TO LUGG CPT #1
S P 8	SPARE-RJB TO LUGG CPT #1
S P 9	SPARE-RJB TO LUGG CPT #2
S P 10	SPARE-RJB TO LUGG CPT #1
S P 11	SPARE-FJB TO RJB
S P 12	SPARE-RJB TO ENGINE
S P 13	SPARE-RJB TO ENGINE
S P 14	SPARE-FJB TO RJB

No.	DESCRIPTION
S P 15	SPARE-RJB TO ENGINE
S P 16	SPARE-RJB TO ENGINE
S P 17	SPARE-RJB TO ENGINE
S P 18	SPARE-FJB TO RJB
S P 24	SPARE-RJB TO LAVATORY ROOF
S P 25	SPARE-RJB TO LAVATORY ROOF
S P 26	SPARE-RJB TO LAVATORY ROOF
S P 27	SPARE-RJB TO LH HAT RACK
S P 28	SPARE-RJB TO LH HAT RACK
S P 31	SPARE-RJB TO RH HAT RACK
S P 32	SPARE-RJB TO RH HAT RACK
S P 33	SPARE-FJB TO RJB
S P 38	SPARE-FJB TO RJB
S P 43	SPARE-FJB TO RJB
S P 45	SPARE-FJB TO RJB
S P 46	SPARE-RJB TO LH FR ROOF
S P 48	SPARE-RJB TO DASH CENTER PANEL
S P 56	SPARE-ENGINE TO RH SW PANEL
S P 57	SPARE-DASH CENTER PANEL TO ENG.
S P 58	SPARE-DASH CENTER PANEL TO ENG.
S P 59	SPARE-FJB TO ENGINE
S P 61	SPARE-FJB TO DASH RH PANEL
S P 68	SPARE-FJB TO ENGINE
S P 69	SPARE-FJB TO FR AXLE
S P 70	SPARE-FJB TO FR AXLE
S P 71	SPARE-FJB TO RH SW PANEL
S P 72	SPARE-FJB TO FR SERV CPT
S P 74	SPARE-FJB TO LH CONSOLE
S P 77	SPARE-FJB TO EVAPORATOR CPT
S P 78	SPARE-FJB TO CONDENSER CPT
S P 79	SPARE-FJB TO CONDENSER CPT
S P 87	SPARE-RJB TO LH HAT RACK
S P 88	SPARE-RJB TO RH HAT RACK
S P 92	SPARE-RJB TO CONDENSER CPT
S P 93	SPARE-RJB TO EVAPORATOR CPT
S P 94	SPARE-RJB TO RR ROOF
S P 95	SPARE-RJB TO RR ROOF
S P 96	SPARE-RJB TO LUGG CPT #2
S P 97	SPARE-RJB TO LUGG CPT #3
S P 98	SPARE-RJB TO LUGG CPT #3
S P 104	SPARE-RJB TO ENGINE CPT
S P 105	SPARE-FJB TO ENGINE
S P 106	SPARE-RJB TO BATT. CPT.
S P 107	SPARE-RJB TO BATT. CPT.
S P 108	SPARE-RJB TO BATT. CPT.
S P 109	SPARE-RJB TO ENGINE CPT.
S P 110	SPARE-RJB TO ENGINE CPT.
S P 111	SPARE-RJB TO ENGINE CPT.
S P 112	SPARE-RJB TO ENGINE CPT.
S P 114	SPARE-FJB TO U/DASH WIPER

No.	DESCRIPTION
S P 115	SPARE-FJB TO U/DASH WIPER
S P 116	SPARE-FJB TO U/DASH FLOOR
S P 117	SPARE-FJB TO U/DASH FLOOR
W C	A/C & HEAT SYST-EVAP CTR SIGN
Y C	INTERIOR LTS-110V FLUORESCENT
Y D	INTERIOR LTS-110V FLUORESCENT
0	BC - BAT. CPT CHASSIS GRD
0	CONDENSER CPT GRD
0	RS - RR JCT BOX RLY GRD
0	GALLEY GRD
0 A	BC - SHIELD GRD
0 A	RS - RR JCT BOX RLY GRD
0 A	FRS - FR ROOF ACCES. GRD
0 A	RS - LUG. CPT ACCES. GRD
0 A A	RS - VOLTAGE REGULATOR GRD
0 B	EC - ENGINE GRD
0 B	FRS - FR ROOF HEAT WIND GRD
0 B	RS - LUG. CPT ACCES. GRD
0 B E	RJB - BAT. EQUAL. BAT GRD
0 C	EC - STARTER MOTOR GRD
0 C	FS - SERV. CPT ACCES. GRD
0 C	BC - FAN CONDENSER GRD
0 C R	24V DISC. SW. RLY GRD SIGNAL
0 C S	24V DISC. SW. RLY GRD SIGNAL
0 C 1	FS - SERV. CPT ACCES. GRD
0 C 2	FS - SERV. CPT ACCES. GRD
0 C 3	FS - SERV. CPT ACCES. GRD
0 C 4	FS - FJB CPT ACCES. GRD
0 D	BC - FAN CONDENSER GRD
0 D	RS - HAT RACK ACCES. LH GRD
0 D F	RS - RR SIDE FLASH & MARK GRD
0 D R	RS - RJB DOCKING LT RESISTORS
0 E	RS - HAT RACK ACCES. LH GRD
0 F	RS - HAT RACK ACCES. RH GRD
0 G	RS - HAT RACK ACCES. RH GRD
0 H	RS - LAVATORY ACCES. GRD
0 J	FS - LH CONSOLE SW GRD
0 J	RS - RR ROOF ACCES. GRD
0 K	RS - RR ROOF ACCES. GRD
0 K	RS - RJB A/C JCT PANEL GRD
0 L	FS - FR SERVICE CPT LTS GRD
0 L 1	FS - FR SERVICE CPT LTS GRD
0 L 2	FS - FR SERVICE CPT LTS GRD
0 L 3	FS - FJB GRD
0 L 4	FS - FJB GRD
0 L 5	FS - CIGAR LIGHTER
0 L	RS - ENGINE CPT ACCES. GRD
0 L	ENTRANCE DOOR (SEDAN) GRD
0 L H	RS - RR END LAMPS LH GRD
0 M	FS - ELECTRICAL MOTOR GRD

No.	DESCRIPTION
0 M 3	FS - ELECTRICAL MOTOR GRD
0 M 4	FS - ELECTRICAL MOTOR GRD
0 M 5	FS - ELECTRICAL MOTOR GRD
0 M 6	FS - FJB GRD
0 M 7	FS - ELECTRICAL MOTOR GRD
0 M	RS - ENGINE CPT ACCES. GRD
0 M R	24V DISC. SW. RLY GRD SIGNAL
0 M S	24V DISC. SW. RLY GRD SIGNAL
0 N	RS - ENGINE CPT ACCES. GRD
0 P	RS - ENGINE CPT ACCES. GRD
0 R	FS - SOUND SYS. JCT PANEL GRD
0 R	RS - RJB GRD
0 R	RS - ENGINE CPT ACCES. GRD
0 R E	RADIO &CTRL HEAD CHASSIS GRD
0 R H	RS - RR END LAMPS RH GRD
0 S	12 VOLT RUN - GND RELAY
0 S 2	SOUND SYSTEM RADIO GRD
0 S 3	SOUND SYSTEM VIDEO GRD
0 S S	SOUNS SYSTEM BATT. GRD
0 T	FS - DASH ACCES. GRD
0 T 1	FS - DASH ACCES. GRD
0 T 2	FS - DASH ACCES. GRD
0 T 3	FS - DASH ACCES. GRD
0 T 4	FS - DASH ACCES. GRD
0 V	RR JCT BOX CPT GRD STUD
0 VA	BATTERY TO EQUALISER 0V
0 W	FS - WT GND & SHIELD
0 W	RS - RR JCT BOX (WCL) GRD
0 W C	RS - RR JCT BOX GRD (WCL)
0 X	RS - RR JCT BOX GRD
0 Y	ABS FR JCT BOX CPT GRD STUD
0 Y	RR JCT BOX GRD
0 Y 1	ABS FR JCT BOX CPT GRD STUD
0 Z	RR JCT BOX CPT GRD STUD
0 0	FJB & RJB BATT. GRD
0 0 A	FBG - T.T.LT. MODULES BATT. GRD
0 0 Y	FS - ABS MODULLE BATT. GRD
0 0 S S	SOUND SYSTEM BATT. GRD
1	TACHO SYSTEM - RPM SIGNAL +
2 A	A/C & HEAT SYSTEM-COOL 1 SIGN
2 B	A/C & HEAT SYSTEM-COOL SIGN
2 H	A/C & HEAT SYSTEM-HI PRESS SW
2 H L	A/C & HEAT SYSTEM-LO & HI PRESS SW
2 L	A/C & HEAT SYSTEM-LO PRESS SW
4	HOSTESS & PASSENGER CHIME
4 A	HOSTESS & PASSENGER CHIME
4 B	PASSENGER CHIME
4 C	HOSTESS CHIME
5	INTERIOR LTS-AISLE & EMERG. EXIT
5	UPPER WINDSHIELD DEFROSTER

CIRCUIT NUMBER CODE

No.	DESCRIPTION
5 D	UPPER WINDSHIELD DEFROSTER
5 E	UPPER WINDSHIELD DEFROSTER
5 N	INTERIOR LTS-EMERGENCY EXIT
5 N C	SPEED SIGNAL LOWER 5MPH
5 N O	SPEED SIGNAL HIGHER 5MPH
6	INTERIOR LTS-AISLE
7 B	ENTRANCE DOOR (SEDAN)
7 D	ENTRANCE DOOR (SEDAN)
7 D A	ENTRANCE DOOR (SEDAN)
9	INTERIOR LTS-ENGINE CPT
9 A	INTERIOR LTS-ENGINE CPT
9 B	INTERIOR LTS-ENGINE CPT
9 E	INTERIOR LTS-FR SERVICE CPT
9 F	INTERIOR LTS-FR SERVICE CPT
1 0	INTERIOR LTS-LUGGAGE CPT
1 0 A	INTERIOR LTS-LUGGAGE CPT
1 0 B	INTERIOR LTS-LUGGAGE CPT
1 0 D	INTERIOR LTS-LUGGAGE CPT
1 0 F	INTERIOR LTS-LUGGAGE CPT
1 0 H	INTERIOR LTS-LUGGAGE CPT
1 0 K	INTERIOR LTS-LUGGAGE CPT
1 0 R	INTERIOR LTS-LUGGAGE DOOR AJAR
1 1	FR DESTINATION SIGN
1 1 A	FR DESTINATION SIGN
1 1 B	FR DESTINATION SIGN
1 1 C	FR DESTINATION SIGN
1 1 D	FR DESTINATION SIGN
1 1 E	FR DESTINATION SIGN
1 1 K	FR DESTINATION SIGN
1 2	12V BAT ELECTRONIC JCT BLOCK
1 2	BAT CPT 12V BATTERY
1 2 A	FR JCT BOX 12V DISC SW
1 2 A	RR JCT BOX 12V DISC SW
1 2 B	12V BAT ELECTRICAL JCT BLOCK
1 2 B	RR JCT BOX 12V DISC SW
1 2 B	FR JCT BOX 12V DISC SW
1 2 B E	BAT. EQUALIZER MONITOR
1 2 C	FR JCT BOX 12V DISC SW
1 2 C	RR JCT BOX 12V DISC SW
1 2 D	BAT CPT 12V BATTERY
1 2 D T	TTLT MODULE
1 2 E	FR JCT BOX 12V DISC SW
1 2 E	RR JCT BOX 12V DISC SW
1 2 F	BAT CPT 12V FJB & IC
1 2 F	FR JCT BOX 12V DISC SW
1 2 F	RR JCT BOX 12V DISC SW
1 2 G	FR JCT BOX 12V DISC SW
1 2 J	FR JCT BOX 12V DISC SW
1 2 I	12V IGNITION DISTRIBUTION
1 2 I	RR JCT BOX 12V IGNITION

No.	DESCRIPTION
1 2 K	12 VOLT IGN. TTLT & HVAC MODULE
1 2 I A	12V IGNITION DISTRIBUTION
1 2 I A	FR JCT BOX 12V IGNITION
1 2 I B	FR JCT BOX 12V IGNITION
1 2 I F	FR JCT BOX 12V IGNITION
1 2 L X	CLUSTER
1 2 P	LH CONSOLE POWER OUTLET
1 2 R	BAT CPT 12V DISC RLY TO RJB
1 2 R	MEMORY BATTERY RADIO
1 2 S	SOUND SYSTEM 12V RADIO
1 2 S 1	SOUND SYSTEM 12V RADIO
1 2 S 2	SOUND SYSTEM 12V RADIO
1 2 S B	SOUND SYSTEM 12V FEEDING
1 2 S S	SOUND SYSTEM 12V FEEDING
1 2 V A	BATTERY TO EQUALIZER 12V
1 2 V D	12V HOT WIRE DISTRIBUTION
1 2 V F	BAT CPT 12V FJB & IC
1 2 V I	12V IGNITION DISTRIBUTION
1 2 V R	BAT CPT 12V DISC RLY TO RJB
1 2 W	12V BATTERY DDEC III
1 2 W	ENTRANCE DOOR (SEDAN)
1 2 W A	ENTRANCE DOOR (SEDAN)
1 2 X	FR JCT BOX 12V DISC SW
1 2 X 2	FR JCT BOX 12V DISC SW
1 2 Y	FR JCT BOX 12V DISC SW
1 3 A	ALARM & SIGNAL-LO AIR PRIM.
1 3 B	ALARM & SIGNAL-LO AIR SEC.
1 4	LAVATORY-FLUSHING PUMP
1 4 A	LAVATORY-FLUSHING PUMP
1 5	EXTERIOR LTS-MULTI FUNC LEVEL
1 5 A	WIPER & WASHER UPPER WINDSHIELD
1 6	SPEED - SIGNAL +
1 6 A	SPEED - SIGNAL +
1 6 T	SPEED - SIGNAL +
1 7	EXTERIOR LTS-FLASHER UNIT
1 7 A	EXTERIOR LTS-FLASHER UNIT
1 9	DIFFERENTIAL OIL TEMP
2 0	SPEED - SIGNAL -
2 0 T	SPEED - SIGNAL -
2 0 W	SPEED - SIGNAL -
2 1	EXTERIOR LTS-DIRECTIONNAL LH
2 1 A	EXTERIOR LTS-DIRECTIONNAL LH
2 1 B	EXTERIOR LTS-HAZARD
2 1 C	EXTERIOR LTS-CORNERING LH
2 1 H	EXTERIOR LTS-DIRECTIONNAL LH
2 1 K	EXTERIOR LTS-CORNERING
2 1 N	EXTERIOR LTS-CORNERING LH
2 1 P	EXTERIOR LTS-CORNERING LH
2 3	EXTERIOR LTS-DIRECTIONNAL RH
2 3	EXTERIOR LTS-DIRECTIONNAL RH

No.	DESCRIPTION
2 3 A	EXTERIOR LTS-DIRECTIONNAL RH
2 3 B	EXTERIOR LTS-DIRECTIONNAL RH
2 3 C	EXTERIOR LTS-CORNERING RH
2 3 N	EXTERIOR LTS-CORNERING RH
2 3 P	EXTERIOR LTS-CORNERING RH
2 4	BAT CPT 24V BATTERY
2 4	FR JCT BOX 24V DISC SW
2 4 A	BOOSTER BLOCK 24V DISC SW
2 4 A	FR JCT BOX 24V DISC SW
2 4 A	RR JCT BOX 24V DISC SW
2 4 B	24V STARTER RLY FEEDING
2 4 B	FR JCT BOX 24V DISC SW
2 4 B	RR JCT BOX 24V DISC SW
2 4 B C	24 VOLT BATT. CHARGER
2 4 B E	RJB CPT-BAT EQ MONITOR HOT WIRE
2 4 C	FR JCT BOX 24V DISC SW
2 4 C	RR JCT BOX 24V DISC SW
2 4 D	BAT CPT 24V HOT WIRE
2 4 D	FR JCT BOX 24V HOT WIRE
2 4 D	RR JCT BOX 24V HOT WIRE
2 4 D A	A/C JCT BOX 24V HOT WIRE
2 4 E	BAT CPT 24V DISC SW
2 4 E	FR JCT BOX 24V DISC SW
2 4 E	RR JCT BOX 24V DISC SW
2 4 F	FR JCT BOX 24V DISC SW
2 4 F	RR JCT BOX 24V DISC SW
2 4 G	FR JCT BOX 24V DISC SW
2 4 G	RR JCT BOX 24V DISC SW
2 4 H	FR JCT BOX 24V DISC SW
2 4 H	RR JCT BOX 24V DISC SW
2 4 I	FR JCT BOX 24V IGNITION
2 4 I	RR JCT BOX 24V IGNITION
2 4 I A	FR JCT BOX 24V IGNITION
2 4 I A	RR JCT BOX 24V IGNITION
2 4 I B	FR JCT BOX 24V IGNITION
2 4 I B	RR JCT BOX 24V IGNITION
2 4 I C	FR JCT BOX 24V IGNITION
2 4 I F	FJB 24VOLT IGNITION
2 4 P	FR JCT BOX 24V DISC SW
2 4 S	24V DISC SW RLY SIGNAL
2 4 S 1	SOUND SYSTEM 24V AMPLIFIER
2 4 S 2	SOUND SYSTEM 24V AMPLIFIER
2 4 S 3	SOUND SYSTEM 24V VIDEO
2 4 S 4	SOUND SYSTEM 24V VIDEO
2 4 S B	SOUND SYSTEM 24V FEEDING
2 4 S S	SOUND SYSTEM 24V FEEDING
2 4 T	RR JCT BOX 24V DISC SW
2 4 V 2	RR JCT BOX 24V DISC SW
2 4 V 3	RR JCT BOX 24V DISC SW
2 4 V 4	RR JCT BOX 24V DISC SW

No.	DESCRIPTION
2 4 V 5	RR JCT BOX 24V DISC SW
2 4 V D	24V HOT WIRE DISTRIBUTION
2 4 V F	BAT CPT 24V SW TO FJB & IC
2 4 V A	BATTERY TO EQUALIZER 24V
2 4 V I	RR JCT BOX 24V IGNITION
2 4 V R	BAT CPT 24V DISC SW TO RJB
2 4 W	RR JCT BOX 24V DISC SW (WCL)
2 4 W C	BATT.CPT TO HYD. PUMP (WCL)
2 4 W L	24V BATTERY-HYD. PUMP (WCL)
2 5	12VAC GEN RLY ON SIGNAL
2 5	12VAC GEN RLY ON SIGNAL
2 5 A	NOT GENERATOR-WARNING LT
2 5 A	ETHER SWITCH
2 5 B	EXTERIOR LTS-DAYTIME RUN LTS
2 5 F	12 VOLT IGN. DISTRIBUTION
2 6 A	CIGAR LIGHTER
2 6	DRIVER'S WINDOW LIFTER
2 6 B	DRIVER'S WINDOW LIFTER
2 6 C	DRIVER'S WINDOW LIFTER
2 7	LAVATORY-EMERGENCY SONALERT
2 8 A	A/C & HEAT SYSTEM-HI PRESSURE
2 9	A/C & HEAT SYSTEM-DRIVER'S HTR
2 9 A	A/C & HEAT SYSTEM-DRIVER'S HTR
2 9 B	A/C & HEAT SYSTEM-DRIVER'S HTR
2 9 H	HVAC DASH MODULE
3 0 A	GALLEY
3 1 A	A/C & HEAT SYSTEM-UNLOADER
3 1 B	A/C & HEAT SYSTEM-UNLOADER
3 1 B	WIPER & WASHER SYSTEM
3 1 C	WIPER & WASHER SYSTEM
3 1 D	WIPER & WASHER SYSTEM
3 1 E	WIPER & WASHER SYSTEM
3 1 J	WIPER & WASHER SYSTEM
3 1 X	WIPER & WASHER SYSTEM
3 2	EXTERIOR LTS-BACK-UP
3 2 B	EXTERIOR LTS-BACK-UP
3 2 C	BACK-UP PWR & SIGNAL
3 2 D	BACK-UP ALARM
3 5	ENTRANCE DOOR (SEDAN)
3 5 B	ENTRANCE DOOR (SEDAN)
3 5 B B	ENTRANCE DOOR (SEDAN)
3 5 D	ENTRANCE DOOR (SEDAN)
3 6	JACOB BRAKE SYSREM
3 6 A	JACOB BRAKE SYSREM
3 8	INTERIOR LTS-24V FLUORESCENT
3 8 A	INTERIOR LTS-24V FLUORESCENT
3 8 C	INTERIOR LTS-24V FLUORESCENT
3 8 D	INTERIOR LTS-24V FLUORESCENT
3 9	INTERIOR LTS-24V LH CONSOLE SW
3 9 A	INTERIOR LTS-DRIVER"S LTS

CIRCUIT NUMBER CODE

No.	DESCRIPTION
39 P	READING LIGHTS
41	A/C & HEAT SYSTEM-COND FAN MOT
41 A	A/C & HEAT SYSTEM-COND FAN MOT
41 B	A/C & HEAT SYSTEM-COND FAN MOT
42	A/C & HEAT SYSTEM-COND FAN MOT
42 A	A/C & HEAT SYSTEM-COND FAN MOT
43	A/C & HEAT SYSTEM-COND FAN MOT
44	EXTERIOR LTS-FOG
44 A	EXTERIOR LTS-FOG
44 B	EXTERIOR LTS-FOG
44 C	EXTERIOR LTS-FOG & HAZARD
45 B	A/C & HEAT SYSTEM-HEAT SIGN
45 D	A/C & HEAT SYSTEM-WATER VALVE
45 E	A/C & HEAT SYSTEM-HEAT 1 SIGN
45 G	A/C & HEAT SYSTEM-DRIVER'S HTR
45 H	A/C & HEAT SYSTEM-DRIVER'S HTR
45 W	A/C & HEAT SYSTEM-COND. DOOR AJAR
46	EXTERIOR LTS-MARKER
46 A	EXTERIOR LTS-MARKER
46 B	EXTERIOR LTS-MARKER
46 B	EXTERIOR LTS-MARKER
46 C	EXTERIOR LTS-MARKER
47	A/C & HEAT SYSTEM-DRIVER'S HTR
48	ENTRANCE DOOR (SEDAN)
48 A	ENTRANCE DOOR (SEDAN)
49	ENTRANCE DOOR (SEDAN)
49 A	ENTRANCE DOOR (SEDAN)
50	AIR DRYER
52	ALARM & SIGNAL-ELEC. HORN
52 A	ALARM & SIGNAL-ELEC. HORN
52 B	ALARM & SIGNAL- AIR HORN
52 C	ALARM & SIGNAL- AIR HORN
53	ALARM & SIGNAL-ELEC. HORN
53 A	WIPER & WASHER SYSTEM
53 B	WIPER & WASHER SYSTEM
53 C	WIPER & WASHER SYSTEM
53 E	WIPER & WASHER SYSTEM
53 J	WIPER & WASHER SYSTEM
55	EXTERIOR LTS-HI BEAM
57	EXTERIOR LTS-HI BEAM
57 A	A/C & HEAT SYSTEM-WATER PUMP
57 A	EXTERIOR LTS-HI BEAM
57 B	A/C & HEAT SYSTEM-WATER PUMP
57 C	PRE-HEAT WATER HEATER
57 CA	A/C & HEAT SYSTEM-HEAT SIGN
57 CC	A/C & HEAT SYSTEM-HEAT SIGN
58	EXTERIOR LTS-LO BEAM
58 A	EXTERIOR LTS-LO BEAM
58 B	EXTERIOR LTS-LO BEAM
58 E	EXTERIOR LTS-LO BEAM

No.	DESCRIPTION
59 A	JACOB BRAKE SYSTEM
61	EXTERIOR LTS-24V FEED SW
61 A	EXTERIOR LTS-HEAD SIGNAL
62	LAVATORY-OCCUPIED LT
62 A	LAVATORY-FLUOR LT
62 B	LAVATORY-FLUOR LT
62 E	LAVATORY-OCCUP & FLUOR LT
63	EXTERIOR LTS-CLEARANCE
63 A	EXTERIOR LTS-CLEARANCE
63 B	EXTERIOR LTS-CLEARANCE
63 C	EXTERIOR LTS-MARKER SIGNAL
63 D	EXTERIOR LTS-MARKER & TAIL
63 E	EXTERIOR LTS-CLEARANCE
63 F	EXTERIOR LTS-MARKER BLINKER
63 H	EXTERIOR LTS-TAIL
64	DRIVERS FAN
64 B	DRIVERS FAN
64 C	DRIVERS FAN
65	FOOT DAMPER MOTOR
65 A	FOOT DAMPER MOTOR
65 P	PASSENGER REC. DAMPER
65 D	DRIVER REC. DAMPER
66	O_PASS. ON/OFF
67	24 VOLT RUN DISTRIBUTION
67 A	A/C & HEAT SYSTEM
67 B	A/C & HEAT SYSTEM
67 C	HEATING WINDSHIELD
67 K	A/C & HEAT SYSTEM-COND FAN CTR
67 L	A/C & HEAT SYSTEM-COND FAN CTR
67 V	A/C & HEAT SYSTEM-WATER VALVE
68	DASH & DEFROST DAMPER MOTOR
68 A	DASH & DEFROST DAMPER MOTOR
70	INTERIOR LTS-HAT RACK & RR RUN.
72	SUN VISOR-FEEDING
72 A	SUN VISOR-RH
72 B	SUN VISOR-RH
72 C	SUN VISOR-LH
72 D	SUN VISOR-LH
73	LAVATORY-FEEDING
74	INTERIOR LTS-READING RH
74 A	INTERIOR LTS-READING RH
74 D	INTERIOR LTS-READING SIGNAL
75	INTERIOR LTS-READING LH
75 A	INTERIOR LTS-READING LH
76	FUEL TANK GAUGE
76 B	LOW FUEL LT & ETHER COLD START
76 C	LOW FUEL LT
76 P	FUEL PRIME PUMP
76 M	FUEL PRIME PUMP
77	A/C & HEAT SYSTEM-HI PRESSURE

No.	DESCRIPTION
77 A	A/C & HEAT SYSTEM-DRIVER'S HTR
77 B	A/C & HEAT SYSTEM-COMPRESSOR
77 C	A/C & HEAT SYSTEM-COMPRESSOR
77 H	A/C & HEAT SYSTEM-COMPRESSOR
81	EXTERIOR LTS-STOP SW
82	EXTERIOR LTS-STOP SIGNAL
82 A	EXTERIOR LTS-STOP SIGNAL
82 B	EXTERIOR LTS-STOP LTS
82 K	EXTERIOR LTS-STOP PARK BRK
82 L	EXTERIOR LTS-LH STOP
82 R	EXTERIOR LTS-LH STOP
83	ENGINE CTR-KEY SW ACCES SIGN
84	ENGINE CTR-KEY SW ACCES SIGN
85	ENGINE CTR-KEY SWIGNITION SIGN
85	24V IGNITION SIGNAL
85 A	24V IGN DASH INSTRUMENTATION
85 B	ENGINE CTR-24V IGNITION
85 C	PARKING BRAKE SWITCH
85 F	ENGINE CTR-ENGINE CTR SW IGN
85 F	LO AIR SONALERT
85 W	24V IGN ANTI SKID
85 X	24V IGN ANTI SKID
85 Y	ANTI SKID-WARNING LT
86	ENGINE CTR-STARTER SOL SIGN
86 A	ENGINE CTR-STARTER SOL SIGN
88	ENGINE CTR-RR START SIGNAL
89	ENGINE CTR-RR START SIGNAL
90 B	A/C & HEAT SYSTEM-COND FAN MOT
90 B	ENGINE CTR-MAST KEY SW FEED
90 C	A/C & HEAT SYSTEM-COND FAN MOT
90 F	CHARG SYST-VOLTAGE REGUL. "B"
90 H	A/C & HEAT SYSTEM-EVAP FAN MOT
90 J	A/C & HEAT SYSTEM-COND FAN MOT
91	PARKING BRAKE SW SIGNAL
91 A	DDEC-FAST IDLE SIGNAL
91 S	SONALERT PARKING BRAKE
91 W	PARK, BRAKE SW SIGN (WCL)
92	BATTERY EQUALIZER-CHECK BALANCE
93	BATTERY EQUALIZER-CHECK LO/HI
95 A	ENGINE BRAKE & RETARDER SYSTEM
97	TACHOMETER (-)
100	INTERIOR LTS-GENERAL
100 A	INTERIOR LTS-GENERAL
100 B	INTERIOR LTS-GENERAL
101	24V STARTER SOL FEEDING
101	WORLD TRANSM-LO SIGN SOL. LO
102	24V STARTER TO GENERATOR
102	WORLD TRANSM-SOL. GRD 1
102	WORLD TRANSM-SOL. C3
103	LOW BUOY

No.	DESCRIPTION
104	WORLD TRANSM-SOL. FORWARD
105	WORLD TRANSM-RETARDER & SUMP
105 W	WORLD TRANSM-RETARDER & SUMP
106	WORLD TRANSM-OIL LEVEL HI
107	CHARG SYST-VOLTAGE REGUL. "F"
107	WORLD TRANSM-LOCKUP SOL. HI
108	WORLD TRANSM-REM. PWR WAKE UP
109	WORLD TRANSM-RET. SOL. LO
110	ALARM & SIGNAL-WATER TEMP
110	WORLD TRANSM-LOCKUP SOL. LO
111	WORLD TRANSM-SOL. C6
112	WORLD TRANSM-SPARE OUTPUT (+)
113	ALARM & SIGNAL-OIL PRESS
113	WORLD TRANSM-REVERSE WARNING
114	INTERIOR LTS-DASH LT REGUL.
114	WORLD TRANSM-SPARE OUTPUT (-)
114 A	INTERIOR LTS-DASH LT
114 B	INTERIOR LTS-DASH LT REGUL.
114 D	INTERIOR LTS-DASH LT REGUL.
114 E	INTERIOR LTS-DASH LT REGUL.
115	ALARM & SIGNAL-TAG PRESS
115	DDEC III-COOLANT LEVEL
115	WORLD TRANSM-DO NOT SHIFT SIGN
115 C	DDEC III-COOLANT LEVEL
115 W	WORLD TRANSM-DO NOT SHIFT SIGN
116	WORLD TRANSM-LO SIGNAL SOL. HI
116 B	A/C & HEAT SYSTEM-DRIVER'S HTR
117	WORLD TRANSM-SPARE INPUT (-)
117 A	ALARM & SIGNAL-TRANSM OIL TEMP
117 A	ALARM & SIGNAL-TRANSM OIL TEMP
118	WORLD TRANSM-SPARE INPUT (+)
119	WORLD TRANSM-ENG BRK INPUT (+)
120	WORLD TRANSM-SOL. C1
121	WORLD TRANSM-SOL. GRD 2
122	A/C & HEAT SYSTEM-DRIVER'S HTR
122	A/C & HEAT SYSTEM-FRESH AIR
122	WORLD TRANSM-SOL. GRD 4
122 A	A/C & HEAT SYSTEM-FRESH AIR
123	WORLD TRANSM-NEUTRAL START
123 A	ALARM & SIGNAL-FIRE DETECTOR
123 B	ALARM & SIGNAL-FIRE DETECTOR
124	WORLD TRANSM-THROTTLE (HI)
125	WORLD TRANSM-RET. INDICATOR
125	GALLEY LAMP
125 T	GALLEY LAMP
125 W	WORLD TRANSM-RET. INDICATOR
126	KNEELING SYSTEM
126 A	KNEELING SYSTEM
126 B	KNEELING SYSTEM
126 C	KNEELING SYSTEM

CIRCUIT NUMBER CODE

No.	DESCRIPTION
126 D	KNEELING SYSTEM
126 E	KNEELING SYSTEM
126 F	KNEELING SYSTEM
126 G	KNEELING SYSTEM
126 H	KNEELING SYSTEM
126 K	KNEELING SYSTEM
126 P	KNEELING SYSTEM
126 R	KNEELING SYSTEM
126 W	5 MPH N.C. SIGNAL (WCL)
126 S	KNEELING SYSTEM
126 T	KNEELING SYSTEM
127	WORLD TRANSM-LUBE PRESS SW.
127	PRE-HEAT WATER HEATER
127 A	PRE-HEAT WATER HEATER
127 B	PRE-HEAT WATER HEATER
127	WORLD TRANSM-RETARDER FEED SOL.
127 S	PRE-HEAT WATER HEATER
127 W	PRE-HEAT WATER HEATER
128	PRE-HEAT WATER HEATER
128 A	PRE-HEAT WATER HEATER
128 B	PRE-HEAT WATER HEATER
128 W	PRE-HEAT WATER HEATER
128	WORLD TRANSM-SOL. C2
129	PRE-HEAT WATER HEATER
129	WORLD TRANSM-SOL. C5
130	WORLD TRANSM-SOL. GRD 3
131	WORLD TRANSM-SOL. C4
132	WORLD TRANSM-ENG BRK OUTPUT (-)
132 W	WORLD TRANSM-ENG BRK OUTPUT (-)
133	GALLEY-HEAT CONTAINERS
133 A	GALLEY-HEAT CONTAINERS
133 B	GALLEY-HEAT CONTAINERS
133 C	GALLEY-HEAT CONTAINERS
133	WORLD TRANSM-RET. ACTUATOR HI
134	GALLEY-HEAT CONTAINERS
134 A	GALLEY-HEAT CONTAINERS
134	WORLD TRANSM-RET. APPLY SOL. HI
135	A/C & HEAT SYSTEM-AIR SENSOR
135 A	A/C & HEAT SYSTEM-AIR SENSOR
135 D	A/C & HEAT SYSTEM-AIR SENSOR
135 C	A/C & HEAT SYSTEM-AIR SENSOR
135	WORLD TRANSM-ANALOG GRD
135 D	WORLD TRANSM-RETARDER RES MOD
135 C	WORLD TRANSM-RETARDER TEMP
136	GALLEY-ACCESSORIES
136	WORLD TRANSM-ECU POWER
136 V	WORLD TRANSM-12V BATTERY
136 W	WORLD TRANSM-12V BATTERY
136 X	WORLD TRANSM-12V BATTERY
137	WORLD TRANSM-RETARDER

No.	DESCRIPTION
137 A	MIRROR (SPARTAN & RAMCO)
137 B	RR VIEW MIRROR (SPARTAN)
137 C	RR VIEW MIRROR (SPARTAN)
137 D	RR VIEW MIRROR (SPARTAN)
137 E	RR VIEW MIRROR (SPARTAN)
137 G	RR VIEW MIRROR (SPARTAN)
138	ABS SYSTEM
138	WORLD TRANSM-RETARDER TEMP
138 A	ABS SYSTEM
139	ABS SYSTEM
139	WORLD TRANSM-OUTPUT SPEED HI
140	ABS SYSTEM
140	WORLD TRANSM-OUTPUT SPEED LO
141	ABS SYSTEM
141	WORLD TRANSM-ENGINE SPEED HI
142	ABS SYSTEM
142	WORLD TRANSM-SERIAL COM. A
143	ABS SYSTEM
143	WORLD TRANSM-ECU BATTERY GRD
143 A	ABS SYSTEM
143 W	WORLD TRANSM-BATTERY GRD
143 X	WORLD TRANSM-BATTERY GRD
144	ABS SYSTEM
144	WORLD TRANSM-ECU CHASSIS GRD
144 A	ABS SYSTEM
145	ABS SYSTEM
146	ABS SYSTEM
146	WORLD TRANSM-IGNITION SENSE
146 W	WORLD TRANSM-12V IGNITION
146 X	WORLD TRANSM-12V IGNITION
147	ABS SYSTEM
147	ETHER COLD START
147	WORLD TRANSM-OIL TEMP
147 C	ETHER COLD START
148	ABS SYSTEM
148	WORLD TRANSM-OUTPUT SPEED LO
149	ABS SYSTEM
149	WORLD TRANSM-TURBINE SPEED HI
149 A	ABS SYSTEM
150	DDEC III-ECM BATTERY GRD
150	WORLD TRANSM-ENGINE SPEED LO
150 A	DDEC III-ECM BATTERY GRD
151	ABS SYSTEM
151	DDEC III-ECM BATTERY GRD
151	WORLD TRANSM-SERIAL COM. B
151 A	ABS SYSTEM
152	ABS SYSTEM
152 A	ABS SYSTEM
153	ABS SYSTEM
153	WORLD TRANSM-SPARE INPUT (-)

No.	DESCRIPTION
154	ABS SYSTEM
154	WORLD TRANSM-ABS RET. INPUT
155	ABS SYSTEM
155	WORLD TRANSM-SPARE INPUT (-)
156	ABS SYSTEM
156	WORLD TRANSM-THROTTLE POS.
156 A	ABS SYSTEM
157	ABS SYSTEM
157	WORLD TRANSM-SPEEDO SIGNAL
157 A	ABS SYSTEM
157 B	ABS SYSTEM
158	WORLD TRANSM-DIMMER
160	ALARM & SIGNAL-TAG PRESS SW
160	WORLD TRANSM-SER. INTERFACE (-)
161	WORLD TRANSM-SIGNAL GRD
161 B	WORLD TRANSM-SIGNAL GRD
162	WORLD TRANSM-PRESS. SW C3
163	WORLD TRANSM-RETARDER ENABLE
164	WORLD TRANSM-RET. ACTUATOR SIGN
165	A/C & HEAT SYSTEM-TRANSMITER
165	WORLD TRANSM-OIL LEVEL SIGNAL
165 A	A/C & HEAT SYSTEM-TRANSMITER
165 B	A/C & HEAT SYSTEM-TRANSMITER
165 C	A/C & HEAT SYSTEM-TRANSMITER
165 D	A/C & HEAT SYSTEM-TRANSMITER
166 B	A/C & HEAT SYSTEM-EVAP. MOD.
167	A/C & HEAT SYSTEM-TEMP. CTR
167 A	A/C & HEAT SYSTEM-TEMP. CTR
168	A/C & HEAT SYSTEM-HUMIDISTAT
168	WORLD TRANSM-SER. INTERFACE (+)
168 A	A/C & HEAT SYSTEM-HUMIDISTAT
170	LUGGAGE DOOR LOCK
170 C	LUGGAGE DOOR LOCK
170 E	LUGGAGE DOOR LOCK
170 H	LUGGAGE DOOR LOCK
181 A	THERMOMETER INSIDE SENSOR
181 B	THERMOMETER INSIDE SENSOR
181 C	THERMOMETER OUTSIDE SENSOR
181 D	THERMOMETER OUTSIDE SENSOR
197	FUEL WATER FILTER
197 A	FUEL WATER FILTER
197 B	FUEL WATER FILTER
198	FILTER FUEL HEATER
199	AIR FILTER RESTRICTION SENDER
201	WORLD TRANSM-SPARE
202	WORLD TRANSM-SPARE
203	WORLD TRANSM-SPARE
204	WORLD TRANSM-SPARE
205	WORLD TRANSM-SPARE
206	WORLD TRANSM-SPARE

No.	DESCRIPTION
214	WORLD TRANSM-BACK UP SIGNAL
225	LAVATORY FAN
225 A	LAVATORY FAN
231	NEUTRAL SIGNAL GRD
231 A	NEUTRAL COIL RELAY FEED SIGNAL
231 W	NEUTRAL SIGNAL GRD (WCL)
240	DDEC III-ECM 12V FEEDING
241	DDEC III-ECM 12V FEEDING
251 A	DDEC III - DATA LOGGER 12 H.W.
251	DDEC III - PRODRIVER 12V H.W.
253	GALLEY-MICROWAVE
254	GALLEY-12V FRIGO NORCOLD
254 A	GALLEY-FRIGO
255	GALLEY-COFEEMAKER
255 A	GALLEY-COFEEMAKER
257	WINDSHIELD HEATED
257 A	WINDSHIELD HEATED
257 B	WINDSHIELD HEATED
257 C	WINDSHIELD HEATED
257 D	WINDSHIELD HEATED SPARE
257 E	WINDSHIELD HEATED SPARE
258	WINDSHIELD HEATED
258 A	WINDSHIELD HEATED
259	WINDSHIELD HEATED
259 A	WINDSHIELD HEATED
260	WINDOW AJAR
290	FAN CLUTCH RADIATOR
290	FAN CLUTCH RADIATOR
291	FAN CLUTCH RADIATOR SPD 1
292	FAN CLUTCH RADIATOR SPD 2
300	DOOR AJAR MAGN.SW. (WCL)
300 A	POWER SYSTEM SW. (WCL)
300 B	DOOR AJAR ALARM (WCL)
301	POWER SYSTEM SW. (WCL)
302	DOOR AJAR T.T.LT. (WCL)
302 A	DOOR AJAR ALARM SIGN.(WCL)
302 B	DOOR AJAR MAGN.SW. (WCL)
303	REMOTE WALL SW. DWN (WCL)
304	REMOTE WALL SW. UP (WCL)
305	PARK. BRAKE SOL. VALVE (WCL)
305 A	PARK. BRAKE SAFETY SW. (WCL)
306	CONTROL SYSTEM (WCL RICON)
307	CONTROL SYSTEM (WCL RICON)
308	CONTROL SYSTEM (WCL RICON)
309	CONTROL SYSTEM (WCL RICON)
417	DDEC III-LIMIT SPEED GOVERNOR
419	DDEC III-CHECK ENGINE LIGHT
439	DDEC III-12V IGNITION
440	DDEC III-12V IGNITION
440 A	DDEC III-12V IGNITION

CIRCUIT NUMBER CODE

No.	DESCRIPTION	No.	DESCRIPTION	No.	DESCRIPTION	No.	DESCRIPTION
451	DDEC III-A/C FAN CLUTCH						
505	DDEC III-TACHOMETER DRIVE						
509	DDEC III-STOP ENGINE LIGHT						
510	DDEC III-FAST IDLE SIGNAL						
524	DDEC III-ENGINE BRAKE DISABLE						
525	DDEC III-FAST IDLE SIGNAL						
528	DDEC III-STOP ENG. OVERRIDE						
531	DDEC III-CRUISE CLUTCH RELEASE						
540	DDEC III-CRUISE ENABLE LTS.						
541	DDEC III-CRUISE SET SW						
543	DDEC III-CRUISE STOP SW CUT IN						
544	DDEC III-CRUISE ON/OFF SW						
545	DDEC III-CRUISE RESUME SW						
555	DDEC III-FAN CLUTCH SPEED# 1						
556	DDEC III-VEHICLE SPEED (+)						
557	DDEC III-VEHICLE SPEED (-)						
563	DDEC III-FAN CLUTCH SPEED# 2						
564	DDEC III-DIGITAL OUTPUT						
565	DDEC III-ENGINE BRAKE ACTIVE						
583	DDEC III-ENGINE BRAKE 4 CYL.						
900	DDEC III-DATA LINK (+)						
901	DDEC III-DATA LINK (-)						
908	DDEC III-HYDRAULIC PWM#1 OUTPUT						
916	DDEC III-SENSOR SUPPLY (5VDC)						
952	DDEC III-SENSOR RETURN						
953	DDEC III-BATTERY GRD						
979	DDEC III-ENGINE BRAKE 2 CYL.						

CIRCUIT NUMBER CODE

No.	DESCRIPTION
B A	INTERIOR LTS-110V FLUORESCENT
B B	INTERIOR LTS-110V FLUORESCENT
D 1	SOUND SYSTEM-FR RH SPEAKER
D 2	SOUND SYSTEM-FR RH SPEAKER
D 3	SOUND SYSTEM-FR RH SPEAKER
D 4	SOUND SYSTEM-RR RH SPEAKER
D 5	SOUND SYSTEM-RR RH SPEAKER
D 6	SOUND SYSTEM-RR RH SPEAKER
D 7	SOUND SYSTEM-RR RH SPEAKER
D 8	SOUND SYSTEM-RR RH SPEAKER
D 3 4	SOUND SYSTEM-RR RH SPEAKER
D 6 7	SOUND SYSTEM-RR RH SPEAKER
G 1	SOUND SYSTEM-FR LH SPEAKER
G 2	SOUND SYSTEM-FR LH SPEAKER
G 3	SOUND SYSTEM-FR LH SPEAKER
G 4	SOUND SYSTEM-RR LH SPEAKER
G 5	SOUND SYSTEM-RR LH SPEAKER
G 6	SOUND SYSTEM-RR LH SPEAKER
G 7	SOUND SYSTEM-RR LH SPEAKER
G 8	SOUND SYSTEM-RR LH SPEAKER
G 3 4	SOUND SYSTEM-RR LH SPEAKER
G 6 7	SOUND SYSTEM-RR LH SPEAKER
L 1 A	INTERIOR LTS-110V FLUORESCENT
L 1 B	INTERIOR LTS-110V FLUORESCENT
L 2 A	INTERIOR LTS-110V FLUORESCENT
L 2 B	INTERIOR LTS-110V FLUORESCENT
L 8	ENG. BLK & WATER TANK-HEATER
L 9	ENG. BLK & WATER TANK-HEATER
L 0	110V RECEPTACLE- 110V FLUOR.
L 1	110V RECEPTACLE- 110V FLUOR.
L 2	110V RECEPTACLE- 110V FLUOR.
R A	INTERIOR LTS-110V FLUORESCENT
R B	INTERIOR LTS-110V FLUORESCENT
S H 1	SHIELD CHASSIS GRD
S H 2	SHIELD CHASSIS GRD
S H 3	SHIELD CHASSIS GRD
S H 4	SHIELD CHASSIS GRD
S P 2	SPARE-FJB TO FR SERV CPT
S P 3	SPARE-FJB TO CENTER DASH
S P 4	SPARE-FJB TO CENTER DASH
S P 5	SPARE-RJB TO LUGG CPT #2
S P 6	SPARE-RJB TO LUGG CPT #1
S P 7	SPARE-RJB TO LUGG CPT #1
S P 8	SPARE-RJB TO LUGG CPT #1
S P 9	SPARE-RJB TO LUGG CPT #2
S P 10	SPARE-RJB TO LUGG CPT #1
S P 11	SPARE-FJB TO RJB
S P 12	SPARE-RJB TO ENGINE
S P 13	SPARE-RJB TO ENGINE
S P 14	SPARE-FJB TO RJB

No.	DESCRIPTION
S P 15	SPARE-RJB TO ENGINE
S P 16	SPARE-RJB TO ENGINE
S P 17	SPARE-RJB TO ENGINE
S P 18	SPARE-FJB TO RJB
S P 24	SPARE-RJB TO LAVATORY ROOF
S P 25	SPARE-RJB TO LAVATORY ROOF
S P 26	SPARE-RJB TO LAVATORY ROOF
S P 27	SPARE-RJB TO LH HAT RACK
S P 28	SPARE-RJB TO LH HAT RACK
S P 31	SPARE-RJB TO RH HAT RACK
S P 32	SPARE-RJB TO RH HAT RACK
S P 33	SPARE-FJB TO RJB
S P 38	SPARE-FJB TO RJB
S P 43	SPARE-FJB TO RJB
S P 45	SPARE-FJB TO RJB
S P 46	SPARE-RJB TO LH FR ROOF
S P 48	SPARE-RJB TO DASH CENTER PANEL
S P 56	SPARE-ENGINE TO RH SW PANEL
S P 57	SPARE-DASH CENTER PANEL TO ENG.
S P 58	SPARE-DASH CENTER PANEL TO ENG.
S P 59	SPARE-FJB TO ENGINE
S P 61	SPARE-FJB TO DASH RH PANEL
S P 68	SPARE-FJB TO ENGINE
S P 69	SPARE-FJB TO FR AXLE
S P 70	SPARE-FJB TO FR AXLE
S P 71	SPARE-FJB TO RH SW PANEL
S P 72	SPARE-FJB TO FR SERV CPT
S P 74	SPARE-FJB TO LH CONSOLE
S P 77	SPARE-FJB TO EVAPORATOR CPT
S P 78	SPARE-FJB TO CONDENSER CPT
S P 79	SPARE-FJB TO CONDENSER CPT
S P 87	SPARE-RJB TO LH HAT RACK
S P 88	SPARE-RJB TO RH HAT RACK
S P 92	SPARE-RJB TO CONDENSER CPT
S P 93	SPARE-RJB TO EVAPORATOR CPT
S P 94	SPARE-RJB TO RR ROOF
S P 95	SPARE-RJB TO RR ROOF
S P 96	SPARE-RJB TO LUGG CPT #2
S P 97	SPARE-RJB TO LUGG CPT #3
S P 98	SPARE-RJB TO LUGG CPT #3
S P 104	SPARE-RJB TO ENGINE CPT
S P 105	SPARE-FJB TO ENGINE
S P 106	SPARE-RJB TO BATT. CPT.
S P 107	SPARE-RJB TO BATT. CPT.
S P 108	SPARE-RJB TO BATT. CPT.
S P 109	SPARE-RJB TO ENGINE CPT.
S P 110	SPARE-RJB TO ENGINE CPT.
S P 111	SPARE-RJB TO ENGINE CPT.
S P 112	SPARE-RJB TO ENGINE CPT.
S P 114	SPARE-FJB TO U/DASH WIPER

No.	DESCRIPTION
S P 115	SPARE-FJB TO U/DASH WIPER
S P 116	SPARE-FJB TO U/DASH FLOOR
S P 117	SPARE-FJB TO U/DASH FLOOR
W C	A/C & HEAT SYST-EVAP CTR SIGN
Y C	INTERIOR LTS-110V FLUORESCENT
Y D	INTERIOR LTS-110V FLUORESCENT
0	BC - BAT. CPT CHASSIS GRD
0	CONDENSER CPT GRD
0	RS - RR JCT BOX RLY GRD
0	GALLEY GRD
0 A	BC - SHIELD GRD
0 A	RS - RR JCT BOX RLY GRD
0 A	FRS - FR ROOF ACCES. GRD
0 A	RS - LUG. CPT ACCES. GRD
0 A A	RS - VOLTAGE REGULATOR GRD
0 B	EC - ENGINE GRD
0 B	FRS - FR ROOF HEAT WIND GRD
0 B	RS - LUG. CPT ACCES. GRD
0 B E	RJB - BAT. EQUAL. BAT GRD
0 C	EC - STARTER MOTOR GRD
0 C	FS - SERV. CPT ACCES. GRD
0 C	BC - FAN CONDENSER GRD
0 C R	24V DISC. SW. RLY GRD SIGNAL
0 C S	24V DISC. SW. RLY GRD SIGNAL
0 C 1	FS - SERV. CPT ACCES. GRD
0 C 2	FS - SERV. CPT ACCES. GRD
0 C 3	FS - SERV. CPT ACCES. GRD
0 C 4	FS - FJB CPT ACCES. GRD
0 D	BC - FAN CONDENSER GRD
0 D	RS - HAT RACK ACCES. LH GRD
0 D F	RS - RR SIDE FLASH & MARK GRD
0 D R	RS - RJB DOCKING LT RESISTORS
0 E	RS - HAT RACK ACCES. LH GRD
0 E A	EATON TRANSMISSION GRD
0 F	RS - HAT RACK ACCES. RH GRD
0 G	RS - HAT RACK ACCES. RH GRD
0 H	RS - LAVATORY ACCES. GRD
0 J	FS - LH CONSOLE SW GRD
0 J	RS - RR ROOF ACCES. GRD
0 K	RS - RR ROOF ACCES. GRD
0 K	RS - RJB A/C JCT PANEL GRD
0 L	FS - FR SERVICE CPT LTS GRD
0 L 1	FS - FR SERVICE CPT LTS GRD
0 L 2	FS - FR SERVICE CPT LTS GRD
0 L 3	FS - FJB GRD
0 L 4	FS - FJB GRD
0 L 5	FS - CIGAR LIGHTER
0 L	RS - ENGINE CPT ACCES. GRD
0 L	ENTRANCE DOOR (SEDAN) GRD
0 L H	RS - RR END LAMPS LH GRD

No.	DESCRIPTION
0 M	FS - ELECTRICAL MOTOR GRD
0 M 3	FS - ELECTRICAL MOTOR GRD
0 M 4	FS - ELECTRICAL MOTOR GRD
0 M 5	FS - ELECTRICAL MOTOR GRD
0 M 6	FS - FJB GRD
0 M 7	FS - ELECTRICAL MOTOR GRD
0 M	RS - ENGINE CPT ACCES. GRD
0 M R	24V DISC. SW. RLY GRD SIGNAL
0 M S	24V DISC. SW. RLY GRD SIGNAL
0 N	RS - ENGINE CPT ACCES. GRD
0 P	RS - ENGINE CPT ACCES. GRD
0 R	FS - SOUND SYS. JCT PANEL GRD
0 R	RS - RJB GRD
0 R	RS - ENGINE CPT ACCES. GRD
0 R E	RADIO &CTRL HEAD CHASSIS GRD
0 R H	RS - RR END LAMPS RH GRD
0 S	12 VOLT RUN - GND RELAY
0 S 2	SOUND SYSTEM RADIO GRD
0 S 3	SOUND SYSTEM VIDEO GRD
0 S S	SOUNS SYSTEM BATT. GRD
0 T	FS - DASH ACCES. GRD
0 T 1	FS - DASH ACCES. GRD
0 T 2	FS - DASH ACCES. GRD
0 T 3	FS - DASH ACCES. GRD
0 T 4	FS - DASH ACCES. GRD
0 V	RR JCT BOX CPT GRD STUD
0 VA	BATTERY TO EQUALISER 0V
0 W	FS - WT GND & SHIELD
0 W	RS - RR JCT BOX (WCL) GRD
0 W C	RS - RR JCT BOX GRD (WCL)
0 X	RS - RR JCT BOX GRD
0 Y	ABS FR JCT BOX CPT GRD STUD
0 Y	RR JCT BOX GRD
0 Y 1	ABS FR JCT BOX CPT GRD STUD
0 Z	RR JCT BOX CPT GRD STUD
0 0	FJB & RJB BATT. GRD
0 0 A	FBG - T.T.LT. MODULES BATT. GRD
0 0 Y	FS - ABS MODULLE BATT. GRD
0 0 S S	SOUND SYSTEM BATT. GRD
1	TACHO SYSTEM - RPM SIGNAL +
2 A	A/C & HEAT SYSTEM-COOL 1 SIGN
2 B	A/C & HEAT SYSTEM-COOL SIGN
2 B B	A/C & HEAT SYSTEM-COOL SIGN
2 H	A/C & HEAT SYSTEM-HI PRESS SW
2 H L	A/C & HEAT SYSTEM-LO & HI PRESS SW
2 L	A/C & HEAT SYSTEM-LO PRESS SW
4	HOSTESS & PASSENGER CHIME
4 A	HOSTESS & PASSENGER CHIME
4 B	PASSENGER CHIME
4 C	HOSTESS CHIME

CIRCUIT NUMBER CODE

No.	DESCRIPTION
5	INTERIOR LTS-AISLE & EMERG. EXIT
5	UPPER WINDSHIELD DEFROSTER
5 D	UPPER WINDSHIELD DEFROSTER
5 E	UPPER WINDSHIELD DEFROSTER
5 N	INTERIOR LTS-EMERGENCY EXIT
5 NC	SPEED SIGNAL LOWER 5MPH
5 NO	SPEED SIGNAL HIGHER 5MPH
6	INTERIOR LTS-AISLE
7 B	ENTRANCE DOOR (SEDAN)
7 D	ENTRANCE DOOR (SEDAN)
7 DA	ENTRANCE DOOR (SEDAN)
9	INTERIOR LTS-ENGINE CPT
9 A	INTERIOR LTS-ENGINE CPT
9 B	INTERIOR LTS-ENGINE CPT
9 E	INTERIOR LTS-FR SERVICE CPT
9 F	INTERIOR LTS-FR SERVICE CPT
1 0	INTERIOR LTS-LUGGAGE CPT
1 0 A	INTERIOR LTS-LUGGAGE CPT
1 0 B	INTERIOR LTS-LUGGAGE CPT
1 0 D	INTERIOR LTS-LUGGAGE CPT
1 0 F	INTERIOR LTS-LUGGAGE CPT
1 0 H	INTERIOR LTS-LUGGAGE CPT
1 0 K	INTERIOR LTS-LUGGAGE CPT
1 0 R	INTERIOR LTS-LUGGAGE DOOR AJAR
1 1	FR DESTINATION SIGN
1 1 A	FR DESTINATION SIGN
1 1 B	FR DESTINATION SIGN
1 1 C	FR DESTINATION SIGN
1 1 D	FR DESTINATION SIGN
1 1 E	FR DESTINATION SIGN
1 1 K	FR DESTINATION SIGN
1 2	12V BAT ELECTRONIC JCT BLOCK
1 2	BAT CPT 12V BATTERY
1 2 A	FR JCT BOX 12V DISC SW
1 2 A	RR JCT BOX 12V DISC SW
1 2 B	12V BAT ELECTRICAL JCT BLOCK
1 2 B	RR JCT BOX 12V DISC SW
1 2 B	FR JCT BOX 12V DISC SW
1 2 BE	BAT. EQUALIZER MONITOR
1 2 C	FR JCT BOX 12V DISC SW
1 2 C	RR JCT BOX 12V HOT WIRE
1 2 CE	RR JCT BOX 12V HOT WIRE
1 2 D	BAT CPT 12V BATTERY
1 2 DT	TTLT MODULE
1 2 E	FR JCT BOX 12V DISC SW
1 2 E	RR JCT BOX 12V DISC SW
1 2 F	BAT CPT 12V FJB & IC
1 2 F	FR JCT BOX 12V DISC SW
1 2 F	RR JCT BOX 12V DISC SW
1 2 G	FR JCT BOX 12V DISC SW

No.	DESCRIPTION
1 2 J	FR JCT BOX 12V DISC SW
1 2 I	12V IGNITION DISTRIBUTION
1 2 I	RR JCT BOX 12V IGNITION
1 2 K	12 VOLT IGN. TTLT & HVAC MODULE
1 2 IA	12V IGNITION DISTRIBUTION
1 2 IA	FR JCT BOX 12V IGNITION
1 2 IB	FR JCT BOX 12V IGNITION
1 2 IF	FR JCT BOX 12V IGNITION
1 2 LX	CLUSTER (12V HOT WIRE)
1 2 P	LH CONSOLE POWER OUTLET
1 2 R	BAT CPT 12V DISC RLY TO RJB
1 2 R	MEMORY BATTERY RADIO
1 2 S	SOUND SYSTEM 12V RADIO
1 2 S1	SOUND SYSTEM 12V RADIO
1 2 S2	SOUND SYSTEM 12V RADIO
1 2 SB	SOUND SYSTEM 12V FEEDING
1 2 SS	SOUND SYSTEM 12V FEEDING
1 2 VA	BATTERY TO EQUALIZER 12V
1 2 VD	12V HOT WIRE DISTRIBUTION
1 2 VF	BAT CPT 12V FJB & IC
1 2 VI	12V IGNITION DISTRIBUTION
1 2 VR	BAT CPT 12V DISC RLY TO RJB
1 2 W	12V BATTERY DDEC III
1 2 W	ENTRANCE DOOR (SEDAN)
1 2 WA	ENTRANCE DOOR (SEDAN)
1 2 X	FR JCT BOX 12V DISC SW
1 2 X2	FR JCT BOX 12V DISC SW
1 2 Y	FR JCT BOX 12V DISC SW
1 3 A	ALARM & SIGNAL-LO AIR PRIM.
1 3 B	ALARM & SIGNAL-LO AIR SEC.
1 4	LAVATORY-FLUSHING PUMP
1 4 A	LAVATORY-FLUSHING PUMP
1 5	EXTERIOR LTS-MULTI FUNC LEVEL
1 5 A	WIPER & WASHER UPPER WINDSHIELD
1 6	SPEED - SIGNAL +
1 6 A	SPEED - SIGNAL +
1 6 T	SPEED - SIGNAL +
1 7	EXTERIOR LTS-FLASHER UNIT
1 7 A	EXTERIOR LTS-FLASHER UNIT
1 9	DIFFERENTIAL OIL TEMP
2 0	SPEED - SIGNAL -
2 0 T	SPEED - SIGNAL -
2 0 W	SPEED - SIGNAL -
2 1	EXTERIOR LTS-DIRECTIONNAL LH
2 1 A	EXTERIOR LTS-DIRECTIONNAL LH
2 1 B	EXTERIOR LTS-HAZARD
2 1 C	EXTERIOR LTS-CORNERING LH
2 1 H	EXTERIOR LTS-DIRECTIONNAL LH
2 1 K	EXTERIOR LTS-CORNERING
2 1 N	EXTERIOR LTS-CORNERING LH

No.	DESCRIPTION
2 1 P	EXTERIOR LTS-CORNERING LH
2 3	EXTERIOR LTS-DIRECTIONNAL RH
2 3	EXTERIOR LTS-DIRECTIONNAL RH
2 3 A	EXTERIOR LTS-DIRECTIONNAL RH
2 3 B	EXTERIOR LTS-DIRECTIONNAL RH
2 3 C	EXTERIOR LTS-CORNERING RH
2 3 N	EXTERIOR LTS-CORNERING RH
2 3 P	EXTERIOR LTS-CORNERING RH
2 4	BAT CPT 24V BATTERY
2 4	FR JCT BOX 24V DISC SW
2 4 A	BOOSTER BLOCK 24V DISC SW
2 4 A	FR JCT BOX 24V DISC SW
2 4 A	RR JCT BOX 24V DISC SW
2 4 B	24V STARTER RLY FEEDING
2 4 B	FR JCT BOX 24V DISC SW
2 4 B	RR JCT BOX 24V DISC SW
2 4 BC	24 VOLT BATT. CHARGER
2 4 BE	RJB CPT-BAT EQ MONITOR HOT WIRE
2 4 C	FR JCT BOX 24V DISC SW
2 4 C	RR JCT BOX 24V DISC SW
2 4 D	BAT CPT 24V HOT WIRE
2 4 D	FR JCT BOX 24V HOT WIRE
2 4 D	RR JCT BOX 24V HOT WIRE
2 4 DA	A/C JCT BOX 24V HOT WIRE
2 4 E	BAT CPT 24V DISC SW
2 4 E	FR JCT BOX 24V DISC SW
2 4 E	RR JCT BOX 24V DISC SW
2 4 F	FR JCT BOX 24V DISC SW
2 4 F	RR JCT BOX 24V DISC SW
2 4 G	FR JCT BOX 24V DISC SW
2 4 G	RR JCT BOX 24V DISC SW
2 4 H	FR JCT BOX 24V DISC SW
2 4 H	RR JCT BOX 24V DISC SW
2 4 I	FR JCT BOX 24V IGNITION
2 4 I	RR JCT BOX 24V IGNITION
2 4 IA	FR JCT BOX 24V IGNITION
2 4 IA	RR JCT BOX 24V IGNITION
2 4 IB	FR JCT BOX 24V IGNITION
2 4 IB	RR JCT BOX 24V IGNITION
2 4 IC	FR JCT BOX 24V IGNITION
2 4 IF	FJB 24VOLT IGNITION
2 4 P	FR JCT BOX 24V DISC SW
2 4 S	24V DISC SW RLY SIGNAL
2 4 S1	SOUND SYSTEM 24V AMPLIFIER
2 4 S2	SOUND SYSTEM 24V AMPLIFIER
2 4 S3	SOUND SYSTEM 24V VIDEO
2 4 S4	SOUND SYSTEM 24V VIDEO
2 4 SB	SOUND SYSTEM 24V FEEDING
2 4 SS	SOUND SYSTEM 24V FEEDING
2 4 T	RR JCT BOX 24V DISC SW

No.	DESCRIPTION
2 4 V2	RR JCT BOX 24V DISC SW
2 4 V3	RR JCT BOX 24V DISC SW
2 4 V4	RR JCT BOX 24V DISC SW
2 4 V5	RR JCT BOX 24V DISC SW
2 4 VD	24V HOT WIRE DISTRIBUTION
2 4 VF	BAT CPT 24V SW TO FJB & IC
2 4 VA	BATTERY TO EQUALIZER 24V
2 4 VI	RR JCT BOX 24V IGNITION
2 4 VR	BAT CPT 24V DISC SW TO RJB
2 4 W	RR JCT BOX 24V DISC SW (WCL)
2 4 WC	BATT.CPT TO HYD. PUMP (WCL)
2 4 WL	24V BATTERY-HYD. PUMP (WCL)
2 5	12VAC GEN RLY ON SIGNAL
2 5	12VAC GEN RLY ON SIGNAL
2 5 A	NOT GENERATOR-WARNING LT
2 5 A	ETHER SWITCH
2 5 B	EXTERIOR LTS-DAYTIME RUN LTS
2 5 F	12 VOLT IGN. DISTRIBUTION
2 6 A	CIGAR LIGHTER
2 6	DRIVER'S WINDOW LIFTER
2 6 B	DRIVER'S WINDOW LIFTER
2 6 C	DRIVER'S WINDOW LIFTER
2 7	LAVATORY-EMERGENCY SONALERT
2 8 A	A/C & HEAT SYSTEM-HI PRESSURE
2 9	A/C & HEAT SYSTEM-DRIVER'S HTR
2 9 A	A/C & HEAT SYSTEM-DRIVER'S HTR
2 9 B	A/C & HEAT SYSTEM-DRIVER'S HTR
2 9 H	HVAC DASH MODULE
3 0 A	GALLEY
3 1 A	A/C & HEAT SYSTEM-UNLOADER
3 1 B	A/C & HEAT SYSTEM-UNLOADER
3 1 B	WIPER & WASHER SYSTEM
3 1 C	WIPER & WASHER SYSTEM
3 1 D	WIPER & WASHER SYSTEM
3 1 E	WIPER & WASHER SYSTEM
3 1 J	WIPER & WASHER SYSTEM
3 1 X	WIPER & WASHER SYSTEM
3 2	EXTERIOR LTS-BACK-UP
3 2 B	EXTERIOR LTS-BACK-UP
3 2 C	BACK-UP PWR & SIGNAL
3 2 D	BACK-UP ALARM
3 5	ENTRANCE DOOR (SEDAN)
3 5 B	ENTRANCE DOOR (SEDAN)
3 5 BB	ENTRANCE DOOR (SEDAN)
3 5 D	ENTRANCE DOOR (SEDAN)
3 6	JACOB BRAKE SYSREM
3 6 A	JACOB BRAKE SYSREM
3 8	INTERIOR LTS-24V FLUORESCENT
3 8 A	INTERIOR LTS-24V FLUORESCENT
3 8 C	INTERIOR LTS-24V FLUORESCENT

CIRCUIT NUMBER CODE

No.	DESCRIPTION
3 8 D	INTERIOR LTS-24V FLUORESCENT
3 9	INTERIOR LTS-24V LH CONSOLE SW
3 9 A	INTERIOR LTS-DRIVER"S LTS
3 9 P	READING LIGHTS
4 1	A/C & HEAT SYSTEM-COND FAN MOT
4 1 A	A/C & HEAT SYSTEM-COND FAN MOT
4 1 B	A/C & HEAT SYSTEM-COND FAN MOT
4 2	A/C & HEAT SYSTEM-COND FAN MOT
4 2 A	A/C & HEAT SYSTEM-COND FAN MOT
4 3	A/C & HEAT SYSTEM-COND FAN MOT
4 4	EXTERIOR LTS-FOG
4 4 A	EXTERIOR LTS-FOG
4 4 B	EXTERIOR LTS-FOG
4 4 C	EXTERIOR LTS-FOG & HAZARD
4 5 B	A/C & HEAT SYSTEM-HEAT SIGN
4 5 D	A/C & HEAT SYSTEM-WATER VALVE
4 5 E	A/C & HEAT SYSTEM-HEAT 1 SIGN
4 5 G	A/C & HEAT SYSTEM-DRIVER'S HTR
4 5 H	A/C & HEAT SYSTEM-DRIVER'S HTR
4 5 W	A/C & HEAT SYSTEM-COND. DOOR AJAR
4 6	EXTERIOR LTS-MARKER
4 6 A	EXTERIOR LTS-MARKER
4 6 B	EXTERIOR LTS-MARKER
4 6 B	EXTERIOR LTS-MARKER
4 6 C	EXTERIOR LTS-MARKER
4 7	A/C & HEAT SYSTEM-DRIVER'S HTR
4 8	ENTRANCE DOOR (SEDAN)
4 8 A	ENTRANCE DOOR (SEDAN)
4 9	ENTRANCE DOOR (SEDAN)
4 9 A	ENTRANCE DOOR (SEDAN)
5 0	AIR DRYER
5 2	ALARM & SIGNAL-ELEC. HORN
5 2 A	ALARM & SIGNAL-ELEC. HORN
5 2 B	ALARM & SIGNAL- AIR HORN
5 2 C	ALARM & SIGNAL- AIR HORN
5 3	ALARM & SIGNAL-ELEC. HORN
5 3 A	WIPER & WASHER SYSTEM
5 3 B	WIPER & WASHER SYSTEM
5 3 C	WIPER & WASHER SYSTEM
5 3 E	WIPER & WASHER SYSTEM
5 3 J	WIPER & WASHER SYSTEM
5 5	EXTERIOR LTS-HI BEAM
5 7	EXTERIOR LTS-HI BEAM
5 7 A	A/C & HEAT SYSTEM-WATER PUMP
5 7 A	EXTERIOR LTS-HI BEAM
5 7 B	A/C & HEAT SYSTEM-WATER PUMP
5 7 C	PRE-HEAT WATER HEATER
5 7 CA	A/C & HEAT SYSTEM-HEAT SIGN
5 7 CC	A/C & HEAT SYSTEM-HEAT SIGN
5 8	EXTERIOR LTS-LO BEAM

No.	DESCRIPTION
5 8 A	EXTERIOR LTS-LO BEAM
5 8 B	EXTERIOR LTS-LO BEAM
5 8 E	EXTERIOR LTS-LO BEAM
5 9 A	JACOB BRAKE SYSTEM
6 1	EXTERIOR LTS-24V FEED SW
6 1 A	EXTERIOR LTS-HEAD SIGNAL
6 2	LAVATORY-OCCUPIED LT
6 2 A	LAVATORY-FLUOR LT
6 2 B	LAVATORY-FLUOR LT
6 2 E	LAVATORY-OCCUP & FLUOR LT
6 3	EXTERIOR LTS-CLEARANCE
6 3 A	EXTERIOR LTS-CLEARANCE
6 3 B	EXTERIOR LTS-CLEARANCE
6 3 C	EXTERIOR LTS-MARKER SIGNAL
6 3 D	EXTERIOR LTS-MARKER & TAIL
6 3 E	EXTERIOR LTS-CLEARANCE
6 3 F	EXTERIOR LTS-MARKER BLINKER
6 3 H	EXTERIOR LTS-TAIL
6 4	DRIVERS FAN
6 4 B	DRIVERS FAN
6 4 C	DRIVERS FAN
6 5	FOOT DAMPER MOTOR
6 5 A	FOOT DAMPER MOTOR
6 5 P	PASSENGER REC. DAMPER
6 5 D	DRIVER REC. DAMPER
6 6	O_PASS. ON/OFF
6 7	24 VOLT RUN DISTRIBUTION
6 7 A	A/C & HEAT SYSTEM
6 7 B	A/C & HEAT SYSTEM
6 7 C	HEATING WINDSHIELD
6 7 K	A/C & HEAT SYSTEM-COND FAN CTR
6 7 L	A/C & HEAT SYSTEM-COND FAN CTR
6 7 V	A/C & HEAT SYSTEM-WATER VALVE
6 8	DASH & DEFROST DAMPER MOTOR
6 8 A	DASH & DEFROST DAMPER MOTOR
7 0	INTERIOR LTS-HAT RACK & RR RUN.
7 2	SUN VISOR-FEEDING
7 2 A	SUN VISOR-RH
7 2 B	SUN VISOR-RH
7 2 C	SUN VISOR-LH
7 2 D	SUN VISOR-LH
7 3	LAVATORY-FEEDING
7 4	INTERIOR LTS-READING RH
7 4 A	INTERIOR LTS-READING RH
7 4 D	INTERIOR LTS-READING SIGNAL
7 5	INTERIOR LTS-READING LH
7 5 A	INTERIOR LTS-READING LH
7 6	FUEL TANK GAUGE
7 6 B	LOW FUEL LT & ETHER COLD START
7 6 C	LOW FUEL LT

No.	DESCRIPTION
7 6 P	FUEL PRIME PUMP
7 6 M	FUEL PRIME PUMP
7 7	A/C & HEAT SYSTEM-HI PRESSURE
7 7 A	A/C & HEAT SYSTEM-DRIVER'S HTR
7 7 B	A/C & HEAT SYSTEM-COMPRESSOR
7 7 C	A/C & HEAT SYSTEM-COMPRESSOR
7 7 H	A/C & HEAT SYSTEM-COMPRESSOR
8 1	EXTERIOR LTS-STOP SW
8 2	EXTERIOR LTS-STOP SIGNAL
8 2 A	EXTERIOR LTS-STOP SIGNAL
8 2 B	EXTERIOR LTS-STOP LTS
8 2 K	EXTERIOR LTS-STOP PARK BRK
8 2 L	EXTERIOR LTS-LH STOP
8 2 R	EXTERIOR LTS-LH STOP
8 3	ENGINE CTR-KEY SW ACCES SIGN
8 4	ENGINE CTR-KEY SW ACCES SIGN
8 5	ENGINE CTR-KEY SWIGNITION SIGN
8 5	24V IGNITION SIGNAL
8 5 A	24V IGN DASH INSTRUMENTATION
8 5 B	ENGINE CTR-24V IGNITION
8 5 C	PARKING BRAKE SWITCH
8 5 F	ENGINE CTR-ENGINE CTR SW IGN
8 5 F	LO AIR SONALERT
8 5 W	24V IGN ANTI SKID
8 5 X	24V IGN ANTI SKID
8 5 Y	ANTI SKID-WARNING LT
8 6	ENGINE CTR-STARTER SOL SIGN
8 6 A	ENGINE CTR-STARTER SOL SIGN
8 8	ENGINE CTR-RR START SIGNAL
8 9	ENGINE CTR-RR START SIGNAL
9 0 B	A/C & HEAT SYSTEM-COND FAN MOT
9 0 B	ENGINE CTR-MAST KEY SW FEED
9 0 C	A/C & HEAT SYSTEM-COND FAN MOT
9 0 F	CHARG SYST-VOLTAGE REGUL. "B"
9 0 H	A/C & HEAT SYSTEM-EVAP FAN MOT
9 0 J	A/C & HEAT SYSTEM-COND FAN MOT
9 1	PARKING BRAKE SW SIGNAL
9 1 A	DDEC-FAST IDLE SIGNAL
9 1 S	SONALERT PARKING BRAKE
9 1 W	PARK, BRAKE SW SIGN (WCL)
9 2	BATTERY EQUALIZER-CHECK BALANCE
9 3	BATTERY EQUALIZER-CHECK LO/HI
9 5 A	ENGINE BRAKE & RETARDER SYSTEM
9 7	TACHOMETER (-)
1 0 0	INTERIOR LTS-GENERAL
1 0 0 A	INTERIOR LTS-GENERAL
1 0 0 B	INTERIOR LTS-GENERAL
1 0 1	24V STARTER SOL FEEDING
1 0 1	WORLD TRANSM-LO SIGN SOL. LO
1 0 2	24V STARTER TO GENERATOR

No.	DESCRIPTION
1 0 2	WORLD TRANSM-SOL. GRD 1
1 0 2	WORLD TRANSM-SOL. C3
1 0 3	LOW BUOY
1 0 4	WORLD TRANSM-SOL. FORWARD
1 0 5	WORLD TRANSM-RETARDER & SUMP
1 0 5 W	WORLD TRANSM-RETARDER & SUMP
1 0 6	WORLD TRANSM-OIL LEVEL HI
1 0 7	CHARG SYST-VOLTAGE REGUL. "F"
1 0 7	WORLD TRANSM-LOCKUP SOL. HI
1 0 8	WORLD TRANSM-REM. PWR WAKE UP
1 0 9	WORLD TRANSM-RET. SOL. LO
1 1 0	ALARM & SIGNAL-WATER TEMP
1 1 0	WORLD TRANSM-LOCKUP SOL. LO
1 1 1	WORLD TRANSM-SOL. C6
1 1 2	WORLD TRANSM-SPARE OUTPUT (+)
1 1 3	ALARM & SIGNAL-OIL PRESS
1 1 3	WORLD TRANSM-REVERSE WARNING
1 1 4	INTERIOR LTS-DASH LT REGUL.
1 1 4	WORLD TRANSM-SPARE OUTPUT (-)
1 1 4 A	INTERIOR LTS-DASH LT
1 1 4 B	INTERIOR LTS-DASH LT REGUL.
1 1 4 D	INTERIOR LTS-DASH LT REGUL.
1 1 4 E	INTERIOR LTS-DASH LT REGUL.
1 1 5	ALARM & SIGNAL-TAG PRESS
1 1 5	DDEC III-COOLANT LEVEL
1 1 5	WORLD TRANSM-DO NOT SHIFT SIGN
1 1 5 C	DDEC III-COOLANT LEVEL
1 1 5 W	WORLD TRANSM-DO NOT SHIFT SIGN
1 1 6	WORLD TRANSM-LO SIGNAL SOL. HI
1 1 6 B	A/C & HEAT SYSTEM-DRIVER'S HTR
1 1 7	WORLD TRANSM-SPARE INPUT (-)
1 1 7 A	ALARM & SIGNAL-TRANSM OIL TEMP
1 1 7 A	ALARM & SIGNAL-TRANSM OIL TEMP
1 1 8	WORLD TRANSM-SPARE INPUT (+)
1 1 9	WORLD TRANSM-ENG BRK INPUT (+)
1 2 0	WORLD TRANSM-SOL. C1
1 2 1	WORLD TRANSM-SOL. GRD 2
1 2 2	A/C & HEAT SYSTEM-DRIVER'S HTR
1 2 2	A/C & HEAT SYSTEM-FRESH AIR
1 2 2	WORLD TRANSM-SOL. GRD 4
1 2 2 A	A/C & HEAT SYSTEM-FRESH AIR
1 2 3	WORLD TRANSM-NEUTRAL START
1 2 3 A	ALARM & SIGNAL-FIRE DETECTOR
1 2 3 B	ALARM & SIGNAL-FIRE DETECTOR
1 2 4	WORLD TRANSM-THROTTLE (HI)
1 2 5	WORLD TRANSM-RET. INDICATOR
1 2 5	GALLEY LAMP
1 2 5 T	GALLEY LAMP
1 2 5 W	WORLD TRANSM-RET. INDICATOR
1 2 6	KNEELING SYSTEM

CIRCUIT NUMBER CODE

No.	DESCRIPTION
126 A	KNEELING SYSTEM
126 B	KNEELING SYSTEM
126 C	KNEELING SYSTEM
126 D	KNEELING SYSTEM
126 E	KNEELING SYSTEM
126 F	KNEELING SYSTEM
126 G	KNEELING SYSTEM
126 H	KNEELING SYSTEM
126 K	KNEELING SYSTEM
126 P	KNEELING SYSTEM
126 R	KNEELING SYSTEM
126 W	5 MPH N.C. SIGNAL (WCL)
126 S	KNEELING SYSTEM
126 T	KNEELING SYSTEM
127	WORLD TRANSM-LUBE PRESS SW.
127	PRE-HEAT WATER HEATER
127 A	PRE-HEAT WATER HEATER
127 B	PRE-HEAT WATER HEATER
127	WORLD TRANSM-RETARDER FEED SOL.
127 S	PRE-HEAT WATER HEATER
127 W	PRE-HEAT WATER HEATER
128	PRE-HEAT WATER HEATER
128 A	PRE-HEAT WATER HEATER
128 B	PRE-HEAT WATER HEATER
128 W	PRE-HEAT WATER HEATER
128	WORLD TRANSM-SOL. C2
129	PRE-HEAT WATER HEATER
129	WORLD TRANSM-SOL. C5
130	WORLD TRANSM-SOL. GRD 3
131	WORLD TRANSM-SOL. C4
132	WORLD TRANSM-ENG BRK OUTPUT (-)
132 W	WORLD TRANSM-ENG BRK OUTPUT (-)
133	GALLEY-HEAT CONTAINERS
133 A	GALLEY-HEAT CONTAINERS
133 B	GALLEY-HEAT CONTAINERS
133 C	GALLEY-HEAT CONTAINERS
133	WORLD TRANSM-RET. ACTUATOR HI
134	GALLEY-HEAT CONTAINERS
134 A	GALLEY-HEAT CONTAINERS
134	WORLD TRANSM-RET. APPLY SOL. HI
135	A/C & HEAT SYSTEM-AIR SENSOR
135 A	A/C & HEAT SYSTEM-AIR SENSOR
135 D	A/C & HEAT SYSTEM-AIR SENSOR
135 C	A/C & HEAT SYSTEM-AIR SENSOR
135	WORLD TRANSM-ANALOG GRD
135 D	WORLD TRANSM-RETARDER RES MOD
135 C	WORLD TRANSM-RETARDER TEMP
136	GALLEY-ACCESSORIES
136	WORLD TRANSM-ECU POWER
136 V	WORLD TRANSM-12V BATTERY

No.	DESCRIPTION
136 W	WORLD TRANSM-12V BATTERY
136 X	WORLD TRANSM-12V BATTERY
137	WORLD TRANSM-RETARDER
137 A	MIRROR (SPARTAN & RAMCO)
137 B	RR VIEW MIRROR (SPARTAN)
137 C	RR VIEW MIRROR (SPARTAN)
137 D	RR VIEW MIRROR (SPARTAN)
137 E	RR VIEW MIRROR (SPARTAN)
137 G	RR VIEW MIRROR (SPARTAN)
138	ABS SYSTEM
138	WORLD TRANSM-RETARDER TEMP
138 A	ABS SYSTEM
139	ABS SYSTEM
139	WORLD TRANSM-OUTPUT SPEED HI
140	ABS SYSTEM
140	WORLD TRANSM-OUTPUT SPEED LO
141	ABS SYSTEM
141	WORLD TRANSM-ENGINE SPEED HI
142	ABS SYSTEM
142	WORLD TRANSM-SERIAL COM. A
143	ABS SYSTEM
143	WORLD TRANSM-ECU BATTERY GRD
143 A	ABS SYSTEM
143 W	WORLD TRANSM-BATTERY GRD
144	ABS SYSTEM
144	WORLD TRANSM-ECU CHASSIS GRD
144 A	ABS SYSTEM
145	ABS SYSTEM
146	ABS SYSTEM
146 A	TRANSMISSION-12V IGNITION
146	WORLD TRANSM-IGNITION SENSE
146 W	WORLD TRANSM-12V IGNITION
146 X	WORLD TRANSM-12V IGNITION
147	ABS SYSTEM
147	ETHER COLD START
147	WORLD TRANSM-OIL TEMP
147 C	ETHER COLD START
148	ABS SYSTEM
148	WORLD TRANSM-OUTPUT SPEED LO
149	ABS SYSTEM
149	WORLD TRANSM-TURBINE SPEED HI
149 A	ABS SYSTEM
150	DDEC III-ECM BATTERY GRD
150	WORLD TRANSM-ENGINE SPEED LO
150 A	DDEC III-ECM BATTERY GRD
151	ABS SYSTEM
151	DDEC III-ECM BATTERY GRD
151	WORLD TRANSM-SERIAL COM. B
151 A	ABS SYSTEM
152	ABS SYSTEM

No.	DESCRIPTION
152 A	ABS SYSTEM
153	ABS SYSTEM
153	WORLD TRANSM-SPARE INPUT (-)
154	ABS SYSTEM
154	WORLD TRANSM-ABS RET. INPUT
155	ABS SYSTEM
155	WORLD TRANSM-SPARE INPUT (-)
156	ABS SYSTEM
156	WORLD TRANSM-THROTTLE POS.
156 A	ABS SYSTEM
157	ABS SYSTEM
157	WORLD TRANSM-SPEEDO SIGNAL
157 A	ABS SYSTEM
157 B	ABS SYSTEM
157 D	A.T.C. SYSTEM
157 E	A.T.C. SYSTEM
158	WORLD TRANSM-DIMMER
160	ALARM & SIGNAL-TAG PRESS SW
160	WORLD TRANSM-SER. INTERFACE (-)
161	WORLD TRANSM-SIGNAL GRD
161 B	WORLD TRANSM-SIGNAL GRD
162	WORLD TRANSM-PRESS. SW C3
163	WORLD TRANSM-RETARDER ENABLE
164	WORLD TRANSM-RET. ACTUATOR SIGN
165	A/C & HEAT SYSTEM-TRANSMITER
165	WORLD TRANSM-OIL LEVEL SIGNAL
165 A	A/C & HEAT SYSTEM-TRANSMITER
165 B	A/C & HEAT SYSTEM-TRANSMITER
165 C	A/C & HEAT SYSTEM-TRANSMITER
165 D	A/C & HEAT SYSTEM-TRANSMITER
166 B	A/C & HEAT SYSTEM-EVAP. MOD.
167	A/C & HEAT SYSTEM-TEMP. CTR
167 A	A/C & HEAT SYSTEM-TEMP. CTR
168	A/C & HEAT SYSTEM-HUMIDISTAT
168	WORLD TRANSM-SER. INTERFACE (+)
168 A	A/C & HEAT SYSTEM-HUMIDISTAT
170	LUGGAGE DOOR LOCK
170 C	LUGGAGE DOOR LOCK
170 E	LUGGAGE DOOR LOCK
170 H	LUGGAGE DOOR LOCK
181 A	THERMOMETER INSIDE SENSOR
181 B	THERMOMETER INSIDE SENSOR
181 C	THERMOMETER OUTSIDE SENSOR
181 D	THERMOMETER OUTSIDE SENSOR
197	FUEL WATER FILTER
197 A	FUEL WATER FILTER
197 B	FUEL WATER FILTER
198	FILTER FUEL HEATER
199	AIR FILTER RESTRICTION SENDER
201	WORLD TRANSM-SPARE

No.	DESCRIPTION
202	WORLD TRANSM-SPARE
203	WORLD TRANSM-SPARE
204	WORLD TRANSM-SPARE
205	WORLD TRANSM-SPARE
206	WORLD TRANSM-SPARE
214	WORLD TRANSM-BACK UP SIGNAL
225	LAVATORY FAN
225 A	LAVATORY FAN
231	NEUTRAL SIGNAL GRD
231 A	NEUTRAL COIL RELAY FEED SIGNAL
231 W	NEUTRAL SIGNAL GRD (WCL)
240	DDEC III-ECM 12V FEEDING
241	DDEC III-ECM 12V FEEDING
251 A	DDEC III - DATA LOGGER 12 H.W.
251	DDEC III - PRODRIVER 12V H.W.
253	GALLEY-MICROWAVE
254	GALLEY-12V FRIGO NORCOLD
254 A	GALLEY-FRIGO
255	GALLEY-COFEEMAKER
255 A	GALLEY-COFEEMAKER
257	WINDSHIELD HEATED
257 A	WINDSHIELD HEATED
257 B	WINDSHIELD HEATED
257 C	WINDSHIELD HEATED
257 D	WINDSHIELD HEATED SPARE
257 E	WINDSHIELD HEATED SPARE
258	WINDSHIELD HEATED
258 A	WINDSHIELD HEATED
259	WINDSHIELD HEATED
259 A	WINDSHIELD HEATED
260	WINDOW AJAR
290	FAN CLUTCH RADIATOR
290	FAN CLUTCH RADIATOR
291	FAN CLUTCH RADIATOR SPD 1
292	FAN CLUTCH RADIATOR SPD 2
300	DOOR AJAR MAGN.SW. (WCL)
300 A	POWER SYSTEM SW. (WCL)
300 B	DOOR AJAR ALARM (WCL)
301	POWER SYSTEM SW. (WCL)
302	DOOR AJAR T.T.LT. (WCL)
302 A	DOOR AJAR ALARM SIGN.(WCL)
302 B	DOOR AJAR MAGN.SW. (WCL)
303	REMOTE WALL SW. DWN (WCL)
304	REMOTE WALL SW. UP (WCL)
305	PARK. BRAKE SOL. VALVE (WCL)
305 A	PARK. BRAKE SAFETY SW. (WCL)
306	CONTROL SYSTEM (WCL RICON)
307	CONTROL SYSTEM (WCL RICON)
308	CONTROL SYSTEM (WCL RICON)
309	CONTROL SYSTEM (WCL RICON)

CIRCUIT NUMBER CODE

No.	DESCRIPTION
310	EATON TRANSMISSION
311	EATON TRANSMISSION
312	EATON TRANSMISSION
313	EATON TRANSMISSION
314	EATON TRANSMISSION
315	EATON TRANSMISSIOM
316	EATON TRANSMISSION - EPL
317	EATON TRANSMISSION
318	EATON TRANSMISSION
319	EATON TRANSMISSION
320	EATON TRANSMISSION
321	EATON TRANSMISSION
322	EATON TRANSMISSIION
323	EATON TRANSMISSION
324	EATON TRANSMISSION
325	EATON TRANSMISSION
326	EATON TRANSMISSION
327	EATON TRANSMISSION
328	EATON TRANSMISSION
329	EATON TRANSMISSION
330	EATON TRANSMISSION - EPL
331	EATON TRANSMISSION - EPL
332	EATON TRANSMISSION
333	EATON TRANSMISSION - 12V BATTERY
417	DDEC III-LIMIT SPEED GOVERNOR
419	DDEC III-CHECK ENGINE LIGHT
439	DDEC III-12V IGNITION
440	DDEC III-12V IGNITION
440A	DDEC III-12V IGNITION
451	DDEC III-A/C FAN CLUTCH
505	DDEC III-TACHOMETER DRIVE
509	DDEC III-STOP ENGINE LIGHT
510	DDEC III-FAST IDLE SIGNAL
524	DDEC III-ENGINE BRAKE DISABLE
525	DDEC III-FAST IDLE SIGNAL
528	DDEC III-STOP ENG. OVERRIDE
531	DDEC III-CRUISE CLUTCH RELEASE
540	DDEC III-CRUISE ENABLE LTS.
541	DDEC III-CRUISE SET SW
543	DDEC III-CRUISE STOP SW CUT IN
544	DDEC III-CRUISE ON/OFF SW
545	DDEC III-CRUISE RESUME SW
555	DDEC III-FAN CLUTCH SPEED# 1
556	DDEC III-VEHICLE SPEED (+)
557	DDEC III-VEHICLE SPEED (-)
563	DDEC III-FAN CLUTCH SPEED# 2
564	DDEC III-DIGITAL OUTPUT
565	DDEC III-ENGINE BRAKE ACTIVE
583	DDEC III-ENGINE BRAKE 4 CYL.
900	DDEC III-DATA LINK (+)

No.	DESCRIPTION
901	DDEC III-DATA LINK (-)
908	DDEC III-HYDRAULIC PWM#1 OUTPUT
916	DDEC III-SENSOR SUPPLY (5VDC)
925	J1939-HIGH
926	J1939-LOW
927	J1939-SHIELD
952	DDEC III-SENSOR RETURN
953	DDEC III-BATTERY GRD
979	DDEC III-ENGINE BRAKE 2 CYL.

No.	DESCRIPTION

No.	DESCRIPTION

CIRCUIT NUMBER CODE

No.	DESCRIPTION
B A	INTERIOR LTS-110V FLUORESCENT
B B	INTERIOR LTS-110V FLUORESCENT
D 1	SOUND SYSTEM-FR RH SPEAKER
D 2	SOUND SYSTEM-FR RH SPEAKER
D 3	SOUND SYSTEM-FR RH SPEAKER
D 4	SOUND SYSTEM-RR RH SPEAKER
D 5	SOUND SYSTEM-RR RH SPEAKER
D 6	SOUND SYSTEM-RR RH SPEAKER
D 7	SOUND SYSTEM-RR RH SPEAKER
D 8	SOUND SYSTEM-RR RH SPEAKER
D 3 4	SOUND SYSTEM-RR RH SPEAKER
D 6 7	SOUND SYSTEM-RR RH SPEAKER
G 1	SOUND SYSTEM-FR LH SPEAKER
G 2	SOUND SYSTEM-FR LH SPEAKER
G 3	SOUND SYSTEM-FR LH SPEAKER
G 4	SOUND SYSTEM-RR LH SPEAKER
G 5	SOUND SYSTEM-RR LH SPEAKER
G 6	SOUND SYSTEM-RR LH SPEAKER
G 7	SOUND SYSTEM-RR LH SPEAKER
G 8	SOUND SYSTEM-RR LH SPEAKER
G 3 4	SOUND SYSTEM-RR LH SPEAKER
G 6 7	SOUND SYSTEM-RR LH SPEAKER
L 1 A	INTERIOR LTS-110V FLUORESCENT
L 1 B	INTERIOR LTS-110V FLUORESCENT
L 2 A	INTERIOR LTS-110V FLUORESCENT
L 2 B	INTERIOR LTS-110V FLUORESCENT
L 8	ENG. BLK & WATER TANK-HEATER
L 9	ENG. BLK & WATER TANK-HEATER
L 0	110V RECEPTACLE- 110V FLUOR.
L 1	110V RECEPTACLE- 110V FLUOR.
L 2	110V RECEPTACLE- 110V FLUOR.
R A	INTERIOR LTS-110V FLUORESCENT
R B	INTERIOR LTS-110V FLUORESCENT
S H 1	SHIELD CHASSIS GRD
S H 2	SHIELD CHASSIS GRD
S H 3	SHIELD CHASSIS GRD
S H 4	SHIELD CHASSIS GRD
S P 2	SPARE-FJB TO FR SERV CPT
S P 3	SPARE-FJB TO CENTER DASH
S P 4	SPARE-FJB TO CENTER DASH
S P 5	SPARE-RJB TO LUGG CPT #2
S P 6	SPARE-RJB TO LUGG CPT #1
S P 7	SPARE-RJB TO LUGG CPT #1
S P 8	SPARE-RJB TO LUGG CPT #1
S P 9	SPARE-RJB TO LUGG CPT #2
S P 10	SPARE-RJB TO LUGG CPT #1
S P 11	SPARE-FJB TO RJB
S P 12	SPARE-RJB TO ENGINE
S P 13	SPARE-RJB TO ENGINE
S P 14	SPARE-FJB TO RJB

No.	DESCRIPTION
S P 15	SPARE-RJB TO ENGINE
S P 16	SPARE-RJB TO ENGINE
S P 17	SPARE-RJB TO ENGINE
S P 18	SPARE-FJB TO RJB
S P 24	SPARE-RJB TO LAVATORY ROOF
S P 25	SPARE-RJB TO LAVATORY ROOF
S P 26	SPARE-RJB TO LAVATORY ROOF
S P 27	SPARE-RJB TO LH HAT RACK
S P 28	SPARE-RJB TO LH HAT RACK
S P 31	SPARE-RJB TO RH HAT RACK
S P 32	SPARE-RJB TO RH HAT RACK
S P 33	SPARE-FJB TO RJB
S P 38	SPARE-FJB TO RJB
S P 43	SPARE-FJB TO RJB
S P 45	SPARE-FJB TO RJB
S P 46	SPARE-RJB TO LH FR ROOF
S P 48	SPARE-RJB TO DASH CENTER PANEL
S P 56	SPARE-ENGINE TO RH SW PANEL
S P 57	SPARE-DASH CENTER PANEL TO ENG.
S P 58	SPARE-DASH CENTER PANEL TO ENG.
S P 59	SPARE-FJB TO ENGINE
S P 61	SPARE-FJB TO DASH RH PANEL
S P 68	SPARE-FJB TO ENGINE
S P 69	SPARE-FJB TO FR AXLE
S P 70	SPARE-FJB TO FR AXLE
S P 71	SPARE-FJB TO RH SW PANEL
S P 72	SPARE-FJB TO FR SERV CPT
S P 74	SPARE-FJB TO LH CONSOLE
S P 77	SPARE-FJB TO EVAPORATOR CPT
S P 78	SPARE-FJB TO CONDENSER CPT
S P 79	SPARE-FJB TO CONDENSER CPT
S P 87	SPARE-RJB TO LH HAT RACK
S P 88	SPARE-RJB TO RH HAT RACK
S P 92	SPARE-RJB TO CONDENSER CPT
S P 93	SPARE-RJB TO EVAPORATOR CPT
S P 94	SPARE-RJB TO RR ROOF
S P 95	SPARE-RJB TO RR ROOF
S P 96	SPARE-RJB TO LUGG CPT #2
S P 97	SPARE-RJB TO LUGG CPT #3
S P 98	SPARE-RJB TO LUGG CPT #3
S P 104	SPARE-RJB TO ENGINE CPT
S P 105	SPARE-FJB TO ENGINE
S P 106	SPARE-RJB TO BATT. CPT.
S P 107	SPARE-RJB TO BATT. CPT.
S P 108	SPARE-RJB TO BATT. CPT.
S P 109	SPARE-RJB TO ENGINE CPT.
S P 110	SPARE-RJB TO ENGINE CPT.
S P 111	SPARE-RJB TO ENGINE CPT.
S P 112	SPARE-RJB TO ENGINE CPT.
S P 114	SPARE-FJB TO U/DASH WIPER

No.	DESCRIPTION
S P 115	SPARE-FJB TO U/DASH WIPER
S P 116	SPARE-FJB TO U/DASH FLOOR
S P 117	SPARE-FJB TO U/DASH FLOOR
W C	A/C & HEAT SYST-EVAP CTR SIGN
Y C	INTERIOR LTS-110V FLUORESCENT
Y D	INTERIOR LTS-110V FLUORESCENT
0	BC - BAT. CPT CHASSIS GRD
0	CONDENSER CPT GRD
0	RS - RR JCT BOX RLY GRD
0	GALLEY GRD
0 A	BC - SHIELD GRD
0 A	RS - RR JCT BOX RLY GRD
0 A	FRS - FR ROOF ACCES. GRD
0 A	RS - LUG. CPT ACCES. GRD
0 A A	RS - VOLTAGE REGULATOR GRD
0 B	EC - ENGINE GRD
0 B	FRS - FR ROOF HEAT WIND GRD
0 B	RS - LUG. CPT ACCES. GRD
0 B E	RJB - BAT. EQUAL. BAT GRD
0 C	EC - STARTER MOTOR GRD
0 C	FS - SERV. CPT ACCES. GRD
0 C	BC - FAN CONDENSER GRD
0 C R	24V DISC. SW. RLY GRD SIGNAL
0 C S	24V DISC. SW. RLY GRD SIGNAL
0 C 1	FS - SERV. CPT ACCES. GRD
0 C 2	FS - SERV. CPT ACCES. GRD
0 C 3	FS - SERV. CPT ACCES. GRD
0 C 4	FS - FJB CPT ACCES. GRD
0 D	BC - FAN CONDENSER GRD
0 D	RS - HAT RACK ACCES. LH GRD
0 D F	RS - RR SIDE FLASH & MARK GRD
0 D R	RS - RJB DOCKING LT RESISTORS
0 E	RS - HAT RACK ACCES. LH GRD
0 E A	EATON TRANSMISSION GRD
0 F	RS - HAT RACK ACCES. RH GRD
0 G	RS - HAT RACK ACCES. RH GRD
0 H	RS - LAVATORY ACCES. GRD
0 J	FS - LH CONSOLE SW GRD
0 J	RS - RR ROOF ACCES. GRD
0 K	RS - RR ROOF ACCES. GRD
0 K	RS - RJB A/C JCT PANEL GRD
0 L	FS - FR SERVICE CPT LTS GRD
0 L 1	FS - FR SERVICE CPT LTS GRD
0 L 2	FS - FR SERVICE CPT LTS GRD
0 L 3	FS - FJB GRD
0 L 4	FS - FJB GRD
0 L 5	FS - CIGAR LIGHTER
0 L	RS - ENGINE CPT ACCES. GRD
0 L	ENTRANCE DOOR (SEDAN) GRD
0 L H	RS - RR END LAMPS LH GRD

No.	DESCRIPTION
0 M	FS - ELECTRICAL MOTOR GRD
0 M 3	FS - ELECTRICAL MOTOR GRD
0 M 4	FS - ELECTRICAL MOTOR GRD
0 M 5	FS - ELECTRICAL MOTOR GRD
0 M 6	FS - FJB GRD
0 M 7	FS - ELECTRICAL MOTOR GRD
0 M	RS - ENGINE CPT ACCES. GRD
0 M R	24V DISC. SW. RLY GRD SIGNAL
0 M S	24V DISC. SW. RLY GRD SIGNAL
0 N	RS - ENGINE CPT ACCES. GRD
0 P	RS - ENGINE CPT ACCES. GRD
0 R	FS - SOUND SYS. JCT PANEL GRD
0 R	RS - RJB GRD
0 R	RS - ENGINE CPT ACCES. GRD
0 R E	RADIO &CTRL HEAD CHASSIS GRD
0 R H	RS - RR END LAMPS RH GRD
0 S	12 VOLT RUN - GND RELAY
0 S A	EC-BOSCH ALT. GROUND
0 S 2	SOUND SYSTEM RADIO GRD
0 S 3	SOUND SYSTEM VIDEO GRD
0 S S	SOUNS SYSTEM BATT. GRD
0 T	FS - DASH ACCES. GRD
0 T 1	FS - DASH ACCES. GRD
0 T 2	FS - DASH ACCES. GRD
0 T 3	FS - DASH ACCES. GRD
0 T 4	FS - DASH ACCES. GRD
0 V	RR JCT BOX CPT GRD STUD
0 V A	BATTERY TO EQUALISER 0V
0 W	FS - WT GND & SHIELD
0 W	RS - RR JCT BOX (WCL) GRD
0 W C	RS - RR JCT BOX GRD (WCL)
0 X	RS - RR JCT BOX GRD
0 Y	ABS FR JCT BOX CPT GRD STUD
0 Y	RR JCT BOX GRD
0 Y 1	ABS FR JCT BOX CPT GRD STUD
0 Z	RR JCT BOX CPT GRD STUD
0 0	FJB & RJB BATT. GRD
0 0 A	FBG - T.T.LT. MODULES BATT. GRD
0 0 Y	FS - ABS MODULLE BATT. GRD
0 0 S S	SOUND SYSTEM BATT. GRD
1	TACHO SYSTEM - RPM SIGNAL +
2 A	A/C & HEAT SYSTEM-COOL 1 SIGN
2 B	A/C & HEAT SYSTEM-COOL SIGN
2 B B	A/C & HEAT SYSTEM-COOL SIGN
2 H	A/C & HEAT SYSTEM-HI PRESS SW
2 H L	A/C & HEAT SYSTEM-LO & HI PRESS SW
2 L	A/C & HEAT SYSTEM-LO PRESS SW
4	HOSTESS & PASSENGER CHIME
4 A	HOSTESS & PASSENGER CHIME
4 B	PASSENGER CHIME

CIRCUIT NUMBER CODE

No.	DESCRIPTION
4 C	HOSTESS CHIME
5	INTERIOR LTS-AISLE & EMERG. EXIT
5	UPPER WINDSHIELD DEFROSTER
5 D	UPPER WINDSHIELD DEFROSTER
5 E	UPPER WINDSHIELD DEFROSTER
5 N	INTERIOR LTS-EMERGENCY EXIT
5 N C	SPEED SIGNAL LOWER 5MPH
5 N O	SPEED SIGNAL HIGHER 5MPH
6	INTERIOR LTS-AISLE
7 B	ENTRANCE DOOR (SEDAN)
7 D	ENTRANCE DOOR (SEDAN)
7 D A	ENTRANCE DOOR (SEDAN)
9	INTERIOR LTS-ENGINE CPT
9 A	INTERIOR LTS-ENGINE CPT
9 B	INTERIOR LTS-ENGINE CPT
9 E	INTERIOR LTS-FR SERVICE CPT
9 F	INTERIOR LTS-FR SERVICE CPT
1 0	INTERIOR LTS-LUGGAGE CPT
1 0 A	INTERIOR LTS-LUGGAGE CPT
1 0 B	INTERIOR LTS-LUGGAGE CPT
1 0 D	INTERIOR LTS-LUGGAGE CPT
1 0 F	INTERIOR LTS-LUGGAGE CPT
1 0 H	INTERIOR LTS-LUGGAGE CPT
1 0 K	INTERIOR LTS-LUGGAGE CPT
1 0 R	INTERIOR LTS-LUGGAGE DOOR AJAR
1 1	FR DESTINATION SIGN
1 1 A	FR DESTINATION SIGN
1 1 B	FR DESTINATION SIGN
1 1 C	FR DESTINATION SIGN
1 1 D	FR DESTINATION SIGN
1 1 E	FR DESTINATION SIGN
1 1 K	FR DESTINATION SIGN
1 2	12V BAT ELECTRONIC JCT BLOCK
1 2	BAT CPT 12V BATTERY
1 2 A	FR JCT BOX 12V DISC SW
1 2 A	RR JCT BOX 12V DISC SW
1 2 B	12V BAT ELECTRICAL JCT BLOCK
1 2 B	RR JCT BOX 12V DISC SW
1 2 B	FR JCT BOX 12V DISC SW
1 2 B E	BAT. EQUALIZER MONITOR
1 2 C	FR JCT BOX 12V DISC SW
1 2 C	RR JCT BOX 12V HOT WIRE
1 2 C E	RR JCT BOX 12V HOT WIRE
1 2 D	BAT CPT 12V BATTERY
1 2 D T	TTLT MODULE
1 2 E	FR JCT BOX 12V DISC SW
1 2 E	RR JCT BOX 12V DISC SW
1 2 F	BAT CPT 12V FJB & IC
1 2 F	FR JCT BOX 12V DISC SW
1 2 F	RR JCT BOX 12V DISC SW

No.	DESCRIPTION
1 2 G	FR JCT BOX 12V DISC SW
1 2 H	12 V IGNITION D.T.RUN LIGHT
1 2 J	FR JCT BOX 12V DISC SW
1 2 I	12V IGNITION DISTRIBUTION
1 2 I	RR JCT BOX 12V IGNITION
1 2 K	12 VOLT IGN. TTLT & HVAC MODULE
1 2 I A	12V IGNITION DISTRIBUTION
1 2 I A	FR JCT BOX 12V IGNITION
1 2 I B	FR JCT BOX 12V IGNITION
1 2 I F	FR JCT BOX 12V IGNITION
1 2 L X	CLUSTER (12V HOT WIRE)
1 2 P	LH CONSOLE POWER OUTLET
1 2 R	BAT CPT 12V DISC RLY TO RJB
1 2 R	MEMORY BATTERY RADIO
1 2 S	SOUND SYSTEM 12V RADIO
1 2 S 1	SOUND SYSTEM 12V RADIO
1 2 S 2	SOUND SYSTEM 12V RADIO
1 2 S B	SOUND SYSTEM 12V FEEDING
1 2 S S	SOUND SYSTEM 12V FEEDING
1 2 V A	BATTERY TO EQUALIZER 12V
1 2 V D	12V HOT WIRE DISTRIBUTION
1 2 V F	BAT CPT 12V FJB & IC
1 2 V I	12V IGNITION DISTRIBUTION
1 2 V R	BAT CPT 12V DISC RLY TO RJB
1 2 W	12V BATTERY DDEC III
1 2 W	ENTRANCE DOOR (SEDAN)
1 2 W A	ENTRANCE DOOR (SEDAN)
1 2 X	FR JCT BOX 12V DISC SW
1 2 X 2	FR JCT BOX 12V DISC SW
1 2 Y	FR JCT BOX 12V DISC SW
1 3 A	ALARM & SIGNAL-LO AIR PRIM.
1 3 B	ALARM & SIGNAL-LO AIR SEC.
1 4	LAVATORY-FLUSHING PUMP
1 4 A	LAVATORY-FLUSHING PUMP
1 5	EXTERIOR LTS-MULTI FUNC LEVEL
1 5 A	WIPER & WASHER UPPER WINDSHIELD
1 6	SPEED - SIGNAL +
1 6 A	SPEED - SIGNAL +
1 6 T	SPEED - SIGNAL +
1 7	EXTERIOR LTS-FLASHER UNIT
1 7 A	EXTERIOR LTS-FLASHER UNIT
1 9	DIFFERENTIAL OIL TEMP
2 0	SPEED - SIGNAL -
2 0 T	SPEED - SIGNAL -
2 0 W	SPEED - SIGNAL -
2 1	EXTERIOR LTS-DIRECTIONNAL LH
2 1 A	EXTERIOR LTS-DIRECTIONNAL LH
2 1 B	EXTERIOR LTS-HAZARD
2 1 C	EXTERIOR LTS-CORNERING LH
2 1 H	EXTERIOR LTS-DIRECTIONNAL LH

No.	DESCRIPTION
2 1 K	EXTERIOR LTS-CORNERING
2 1 N	EXTERIOR LTS-CORNERING LH
2 1 P	EXTERIOR LTS-CORNERING LH
2 3	EXTERIOR LTS-DIRECTIONNAL RH
2 3	EXTERIOR LTS-DIRECTIONNAL RH
2 3 A	EXTERIOR LTS-DIRECTIONNAL RH
2 3 B	EXTERIOR LTS-DIRECTIONNAL RH
2 3 C	EXTERIOR LTS-CORNERING RH
2 3 N	EXTERIOR LTS-CORNERING RH
2 3 P	EXTERIOR LTS-CORNERING RH
2 4	BAT CPT 24V BATTERY
2 4	FR JCT BOX 24V DISC SW
2 4 A	BOOSTER BLOCK 24V DISC SW
2 4 A	FR JCT BOX 24V DISC SW
2 4 A	RR JCT BOX 24V DISC SW
2 4 B	24V STARTER RLY FEEDING
2 4 B	FR JCT BOX 24V DISC SW
2 4 B	RR JCT BOX 24V DISC SW
2 4 B C	24 VOLT BATT. CHARGER
2 4 B E	RJB CPT-BAT EQ MONITOR HOT WIRE
2 4 C	FR JCT BOX 24V DISC SW
2 4 C	RR JCT BOX 24V DISC SW
2 4 D	BAT CPT 24V HOT WIRE
2 4 D	FR JCT BOX 24V HOT WIRE
2 4 D	RR JCT BOX 24V HOT WIRE
2 4 D A	A/C JCT BOX 24V HOT WIRE
2 4 E	BAT CPT 24V DISC SW
2 4 E	FR JCT BOX 24V DISC SW
2 4 E	RR JCT BOX 24V DISC SW
2 4 F	FR JCT BOX 24V DISC SW
2 4 F	RR JCT BOX 24V DISC SW
2 4 G	FR JCT BOX 24V DISC SW
2 4 G	RR JCT BOX 24V DISC SW
2 4 H	FR JCT BOX 24V DISC SW
2 4 H	RR JCT BOX 24V DISC SW
2 4 I	FR JCT BOX 24V IGNITION
2 4 I	RR JCT BOX 24V IGNITION
2 4 I A	FR JCT BOX 24V IGNITION
2 4 I A	RR JCT BOX 24V IGNITION
2 4 I B	FR JCT BOX 24V IGNITION
2 4 I B	RR JCT BOX 24V IGNITION
2 4 I C	FR JCT BOX 24V IGNITION
2 4 I F	FJB 24VOLT IGNITION
2 4 P	FR JCT BOX 24V DISC SW
2 4 S	24V DISC SW RLY SIGNAL
2 4 S 1	SOUND SYSTEM 24V AMPLIFIER
2 4 S 2	SOUND SYSTEM 24V AMPLIFIER
2 4 S 3	SOUND SYSTEM 24V VIDEO
2 4 S 4	SOUND SYSTEM 24V VIDEO
2 4 S B	SOUND SYSTEM 24V FEEDING

No.	DESCRIPTION
2 4 S S	SOUND SYSTEM 24V FEEDING
2 4 T	RR JCT BOX 24V DISC SW
2 4 V 2	RR JCT BOX 24V DISC SW
2 4 V 3	RR JCT BOX 24V DISC SW
2 4 V 4	RR JCT BOX 24V DISC SW
2 4 V 5	RR JCT BOX 24V DISC SW
2 4 V D	24V HOT WIRE DISTRIBUTION
2 4 V F	BAT CPT 24V SW TO FJB & IC
2 4 V A	BATTERY TO EQUALIZER 24V
2 4 V I	RR JCT BOX 24V IGNITION
2 4 V R	BAT CPT 24V DISC SW TO RJB
2 4 W	RR JCT BOX 24V DISC SW (WCL)
2 4 W C	BATT.CPT TO HYD. PUMP (WCL)
2 4 W L	24V BATTERY-HYD. PUMP (WCL)
2 5 A 1	PRE-EXITATION ALT. BOSCH #1
2 5 A 2	PRE-EXITATION ALT. BOSCH #2
2 5 A	T.T. LT. ALTERNATOR #1
2 5 B	12 VOLTS IGN. ALT. SIGNAL MODULE
2 5 D	12 V. ENGINE RUN / HVAC SYSTEM
2 5 F	12 VOLT IGN. DISTRIBUTION
2 5 H	24 VOLT IGN. ALT. BOSCH
2 5 K	T.T. LT. ALTERNATOR #2
2 6 A	CIGAR LIGHTER
2 6	DRIVER'S WINDOW LIFTER
2 6 B	DRIVER'S WINDOW LIFTER
2 6 C	DRIVER'S WINDOW LIFTER
2 7	LAVATORY-EMERGENCY SONALERT
2 8 A	A/C & HEAT SYSTEM-HI PRESSURE
2 9	A/C & HEAT SYSTEM-DRIVER'S HTR
2 9 A	A/C & HEAT SYSTEM-DRIVER'S HTR
2 9 B	A/C & HEAT SYSTEM-DRIVER'S HTR
2 9 H	HVAC DASH MODULE
3 0 A	GALLEY
3 1 A	A/C & HEAT SYSTEM-UNLOADER
3 1 B	A/C & HEAT SYSTEM-UNLOADER
3 1 B	WIPER & WASHER SYSTEM
3 1 C	WIPER & WASHER SYSTEM
3 1 D	WIPER & WASHER SYSTEM
3 1 E	WIPER & WASHER SYSTEM
3 1 J	WIPER & WASHER SYSTEM
3 1 X	WIPER & WASHER SYSTEM
3 2	EXTERIOR LTS-BACK-UP
3 2 B	EXTERIOR LTS-BACK-UP
3 2 C	BACK-UP PWR & SIGNAL
3 2 D	BACK-UP ALARM
3 5	ENTRANCE DOOR (SEDAN)
3 5 B	ENTRANCE DOOR (SEDAN)
3 5 B B	ENTRANCE DOOR (SEDAN)
3 5 D	ENTRANCE DOOR (SEDAN)
3 6	JACOB BRAKE SYSREM

CIRCUIT NUMBER CODE

No.	DESCRIPTION
3 6 A	JACOB BRAKE SYSREM
3 8	INTERIOR LTS-24V FLUORESCENT
3 8 A	INTERIOR LTS-24V FLUORESCENT
3 8 C	INTERIOR LTS-24V FLUORESCENT
3 8 D	INTERIOR LTS-24V FLUORESCENT
3 9	INTERIOR LTS-24V LH CONSOLE SW
3 9 A	INTERIOR LTS-DRIVER"S LTS
3 9 P	READING LIGHTS
4 1	A/C & HEAT SYSTEM-COND FAN MOT
4 1 A	A/C & HEAT SYSTEM-COND FAN MOT
4 1 B	A/C & HEAT SYSTEM-COND FAN MOT
4 2	A/C & HEAT SYSTEM-COND FAN MOT
4 2 A	A/C & HEAT SYSTEM-COND FAN MOT
4 3	HAT RACK FAN
4 3 A	HAT RACK FAN
4 3 B	HAT RACK FAN
4 3 D	HAT RACK FAN
4 3 E	HAT RACK FAN
4 3 F	HAT RACK FAN
4 3 G	HAT RACK FAN
4 4	EXTERIOR LTS-FOG
4 4 A	EXTERIOR LTS-FOG
4 4 B	EXTERIOR LTS-FOG
4 4 C	EXTERIOR LTS-FOG & HAZARD
4 5 B	A/C & HEAT SYSTEM-HEAT SIGN
4 5 D	A/C & HEAT SYSTEM-WATER VALVE
4 5 E	A/C & HEAT SYSTEM-HEAT 1 SIGN
4 5 G	A/C & HEAT SYSTEM-DRIVER'S HTR
4 5 H	A/C & HEAT SYSTEM-DRIVER'S HTR
4 5 W	A/C & HEAT SYSTEM-COND. DOOR AJAR
4 6	EXTERIOR LTS-MARKER
4 6 A	EXTERIOR LTS-MARKER
4 6 B	EXTERIOR LTS-MARKER
4 6 B	EXTERIOR LTS-MARKER
4 6 C	EXTERIOR LTS-MARKER
4 7	A/C & HEAT SYSTEM-DRIVER'S HTR
4 8	ENTRANCE DOOR (SEDAN)
4 8 A	ENTRANCE DOOR (SEDAN)
4 9	ENTRANCE DOOR (SEDAN)
4 9 A	ENTRANCE DOOR (SEDAN)
5 0	AIR DRYER
5 2	ALARM & SIGNAL-ELEC. HORN
5 2 A	ALARM & SIGNAL-ELEC. HORN
5 2 B	ALARM & SIGNAL- AIR HORN
5 2 C	ALARM & SIGNAL- AIR HORN
5 3	ALARM & SIGNAL-ELEC. HORN
5 3 A	WIPER & WASHER SYSTEM
5 3 B	WIPER & WASHER SYSTEM
5 3 C	WIPER & WASHER SYSTEM
5 3 E	WIPER & WASHER SYSTEM

No.	DESCRIPTION
5 3 J	WIPER & WASHER SYSTEM
5 5	EXTERIOR LTS-HI BEAM
5 7	EXTERIOR LTS-HI BEAM
5 7 A	A/C & HEAT SYSTEM-WATER PUMP
5 7 A	EXTERIOR LTS-HI BEAM
5 7 B	A/C & HEAT SYSTEM-WATER PUMP
5 7 C	PRE-HEAT WATER HEATER
5 7 C A	A/C & HEAT SYSTEM-HEAT SIGN
5 7 C C	A/C & HEAT SYSTEM-HEAT SIGN
5 8	EXTERIOR LTS-LO BEAM
5 8 A	EXTERIOR LTS-LO BEAM
5 8 B	EXTERIOR LTS-LO BEAM
5 8 E	EXTERIOR LTS-LO BEAM
5 9 A	JACOB BRAKE SYSTEM
6 1	EXTERIOR LTS-24V FEED SW
6 1 A	EXTERIOR LTS-HEAD SIGNAL
6 2	LAVATORY-OCCUPIED LT
6 2 A	LAVATORY-FLUOR LT
6 2 B	LAVATORY-FLUOR LT
6 2 E	LAVATORY-OCCUP & FLUOR LT
6 3	EXTERIOR LTS-CLEARANCE
6 3 A	EXTERIOR LTS-CLEARANCE
6 3 B	EXTERIOR LTS-CLEARANCE
6 3 C	EXTERIOR LTS-MARKER SIGNAL
6 3 D	EXTERIOR LTS-MARKER & TAIL
6 3 E	EXTERIOR LTS-CLEARANCE
6 3 F	EXTERIOR LTS-MARKER BLINKER
6 3 H	EXTERIOR LTS-TAIL
6 4	DRIVERS FAN
6 4 B	DRIVERS FAN
6 4 C	DRIVERS FAN
6 5	FOOT DAMPER MOTOR
6 5 A	FOOT DAMPER MOTOR
6 5 P	PASSENGER REC. DAMPER
6 5 D	DRIVER REC. DAMPER
6 6	O_PASS. ON/OFF
6 7	24 VOLT RUN DISTRIBUTION
6 7 A	A/C & HEAT SYSTEM
6 7 B	A/C & HEAT SYSTEM
6 7 C	HEATING WINDSHIELD
6 7 K	A/C & HEAT SYSTEM-COND FAN CTR
6 7 L	A/C & HEAT SYSTEM-COND FAN CTR
6 7 V	A/C & HEAT SYSTEM-WATER VALVE
6 8	DASH & DEFROST DAMPER MOTOR
6 8 A	DASH & DEFROST DAMPER MOTOR
7 0	INTERIOR LTS-HAT RACK & RR RUN.
7 2	SUN VISOR-FEEDING
7 2 A	SUN VISOR-RH
7 2 B	SUN VISOR-RH
7 2 C	SUN VISOR-LH

No.	DESCRIPTION
7 2 D	SUN VISOR-LH
7 3	LAVATORY-FEEDING
7 4	INTERIOR LTS-READING RH
7 4 A	INTERIOR LTS-READING RH
7 4 D	INTERIOR LTS-READING SIGNAL
7 5	INTERIOR LTS-READING LH
7 5 A	INTERIOR LTS-READING LH
7 6	FUEL TANK GAUGE
7 6 B	LOW FUEL LT & ETHER COLD START
7 6 C	LOW FUEL LT
7 6 P	FUEL PRIME PUMP
7 6 M	FUEL PRIME PUMP
7 7	A/C & HEAT SYSTEM-HI PRESSURE
7 7 A	A/C & HEAT SYSTEM-DRIVER'S HTR
7 7 B	A/C & HEAT SYSTEM-COMPRESSOR
7 7 C	A/C & HEAT SYSTEM-COMPRESSOR
7 7 H	A/C & HEAT SYSTEM-COMPRESSOR
8 1	EXTERIOR LTS-STOP SW
8 2	EXTERIOR LTS-STOP SIGNAL
8 2 A	EXTERIOR LTS-STOP SIGNAL
8 2 B	EXTERIOR LTS-STOP LTS
8 2 K	EXTERIOR LTS-STOP PARK BRK
8 2 L	EXTERIOR LTS-LH STOP
8 2 R	EXTERIOR LTS-LH STOP
8 3	ENGINE CTR-KEY SW ACCES SIGN
8 4	ENGINE CTR-KEY SW ACCES SIGN
8 5	ENGINE CTR-KEY SWIGNITION SIGN
8 5	24V IGNITION SIGNAL
8 5 A	24V IGN DASH INSTRUMENTATION
8 5 B	ENGINE CTR-24V IGNITION
8 5 C	PARKING BRAKE SWITCH
8 5 F	ENGINE CTR-ENGINE CTR SW IGN
8 5 F	LO AIR SONALERT
8 5 W	24V IGN ANTI SKID
8 5 X	24V IGN ANTI SKID
8 5 Y	ANTI SKID-WARNING LT
8 6	ENGINE CTR-STARTER SOL SIGN
8 6 A	ENGINE CTR-STARTER SOL SIGN
8 8	ENGINE CTR-RR START SIGNAL
8 9	ENGINE CTR-RR START SIGNAL
9 0 B	A/C & HEAT SYSTEM-COND FAN MOT
9 0 B	ENGINE CTR-MAST KEY SW FEED
9 0 C	A/C & HEAT SYSTEM-COND FAN MOT
9 0 F	CHARG SYST-VOLTAGE REGUL. "B"
9 0 H	A/C & HEAT SYSTEM-EVAP FAN MOT
9 0 J	A/C & HEAT SYSTEM-COND FAN MOT
9 1	PARKING BRAKE SW SIGNAL
9 1 A	DDEC-FAST IDLE SIGNAL
9 1 S	SONALERT PARKING BRAKE
9 1 W	PARK, BRAKE SW SIGN (WCL)

No.	DESCRIPTION
9 2	BATTERY EQUALIZER-CHECK BALANCE
9 3	BATTERY EQUALIZER-CHECK LO/HI
9 5 A	ENGINE BRAKE & RETARDER SYSTEM
9 7	TACHOMETER (-)
1 0 0	INTERIOR LTS-GENERAL
1 0 0 A	INTERIOR LTS-GENERAL
1 0 0 B	INTERIOR LTS-GENERAL
1 0 1	24V STARTER SOL FEEDING
1 0 1	WORLD TRANSM-LO SIGN SOL. LO
1 0 2	WORLD TRANSM-SOL. SUPPLY
1 0 2 A	24V STARTER TO BOSCH ALTERNATOR
1 0 3	LOW BUOY
1 0 4	WORLD TRANSM-SOL. FORWARD
1 0 5	WORLD TRANSM-RETARDER & SUMP
1 0 5 W	WORLD TRANSM-RETARDER & SUMP
1 0 6	WORLD TRANSM-OIL LEVEL HI
1 0 7	WORLD TRANSM-LOCKUP SOL. HI
1 0 8	WORLD TRANSM-REM. PWR WAKE UP
1 0 9	WORLD TRANSM-RET. SOL. LO
1 1 0	ALARM & SIGNAL-WATER TEMP
1 1 0	WORLD TRANSM-LOCKUP SOL. LO
1 1 1	WORLD TRANSM-SOL. C6
1 1 2	WORLD TRANSM-SPARE OUTPUT (+)
1 1 3	ALARM & SIGNAL-OIL PRESS
1 1 3	WORLD TRANSM-REVERSE WARNING
1 1 4	INTERIOR LTS-DASH LT REGUL.
1 1 4	WORLD TRANSM-SPARE OUTPUT (-)
1 1 4 A	INTERIOR LTS-DASH LT
1 1 4 B	INTERIOR LTS-DASH LT REGUL.
1 1 4 D	INTERIOR LTS-DASH LT REGUL.
1 1 4 E	INTERIOR LTS-DASH LT REGUL.
1 1 5	ALARM & SIGNAL-TAG PRESS
1 1 5	DDEC III-COOLANT LEVEL
1 1 5	WORLD TRANSM-DO NOT SHIFT SIGN
1 1 5 C	DDEC III-COOLANT LEVEL
1 1 5 W	WORLD TRANSM-DO NOT SHIFT SIGN
1 1 6	WORLD TRANSM-LO SIGNAL SOL. HI
1 1 6 B	A/C & HEAT SYSTEM-DRIVER'S HTR
1 1 7	WORLD TRANSM-SPARE INPUT (-)
1 1 7 A	ALARM & SIGNAL-TRANSM OIL TEMP
1 1 7 A	ALARM & SIGNAL-TRANSM OIL TEMP
1 1 8	WORLD TRANSM-SPARE INPUT (+)
1 1 9	WORLD TRANSM-ENG BRK INPUT (+)
1 2 0	WORLD TRANSM-SOL. C1
1 2 1	WORLD TRANSM-SOL. GRD 2
1 2 2	A/C & HEAT SYSTEM-DRIVER'S HTR
1 2 2	A/C & HEAT SYSTEM-FRESH AIR
1 2 2	WORLD TRANSM-SOL. GRD 4
1 2 2 A	A/C & HEAT SYSTEM-FRESH AIR
1 2 3	WORLD TRANSM-NEUTRAL START

CIRCUIT NUMBER CODE

No.	DESCRIPTION
123 A	ALARM & SIGNAL-FIRE DETECTOR
123 B	ALARM & SIGNAL-FIRE DETECTOR
124	WORLD TRANSM-THROTTLE (HI)
125	WORLD TRANSM-RET. INDICATOR
125	GALLEY LAMP
125 T	GALLEY LAMP
125 W	WORLD TRANSM-RET. INDICATOR
126	KNEELING SYSTEM
126 A	KNEELING SYSTEM
126 B	KNEELING SYSTEM
126 C	KNEELING SYSTEM
126 D	KNEELING SYSTEM
126 E	KNEELING SYSTEM
126 F	KNEELING SYSTEM
126 G	KNEELING SYSTEM
126 H	KNEELING SYSTEM
126 K	KNEELING SYSTEM
126 P	KNEELING SYSTEM
126 R	KNEELING SYSTEM
126 W	5 MPH N.C. SIGNAL (WCL)
126 S	KNEELING SYSTEM
126 T	KNEELING SYSTEM
127	WORLD TRANSM-LUBE PRESS SW.
127	PRE-HEAT WATER HEATER
127 A	PRE-HEAT WATER HEATER
127 B	PRE-HEAT WATER HEATER
127	WORLD TRANSM-RETARDER FEED SOL.
127 S	PRE-HEAT WATER HEATER
127 W	PRE-HEAT WATER HEATER
128	PRE-HEAT WATER HEATER
128 A	PRE-HEAT WATER HEATER
128 B	PRE-HEAT WATER HEATER
128 W	PRE-HEAT WATER HEATER
128	WORLD TRANSM-SOL. C2
129	PRE-HEAT WATER HEATER
129	WORLD TRANSM-SOL. C5
130	WORLD TRANSM-SOL. GRD 3
131	WORLD TRANSM-SOL. C4
132	WORLD TRANSM-ENG BRK OUTPUT (-)
132 W	WORLD TRANSM-ENG BRK OUTPUT (-)
133	GALLEY-HEAT CONTAINERS
133 A	GALLEY-HEAT CONTAINERS
133 B	GALLEY-HEAT CONTAINERS
133 C	GALLEY-HEAT CONTAINERS
133	WORLD TRANSM-RET. ACTUATOR HI
134	GALLEY-HEAT CONTAINERS
134 A	GALLEY-HEAT CONTAINERS
134	WORLD TRANSM-RET. APPLY SOL. HI
135	A/C & HEAT SYSTEM-AIR SENSOR
135 A	A/C & HEAT SYSTEM-AIR SENSOR

No.	DESCRIPTION
135 D	A/C & HEAT SYSTEM-AIR SENSOR
135 C	A/C & HEAT SYSTEM-AIR SENSOR
135	WORLD TRANSM-ANALOG GRD
135 D	WORLD TRANSM-RETARDER RES MOD
135 C	WORLD TRANSM-RETARDER TEMP
136	GALLEY-ACCESSORIES
136	WORLD TRANSM-ECU POWER
136 V	WORLD TRANSM-12V BATTERY
136 W	WORLD TRANSM-12V BATTERY
136 X	WORLD TRANSM-12V BATTERY
137	WORLD TRANSM-RETARDER
137 A	MIRROR (SPARTAN & RAMCO)
137 B	RR VIEW MIRROR (SPARTAN)
137 C	RR VIEW MIRROR (SPARTAN)
137 D	RR VIEW MIRROR (SPARTAN)
137 E	RR VIEW MIRROR (SPARTAN)
137 G	RR VIEW MIRROR (SPARTAN)
138	ABS SYSTEM
138	WORLD TRANSM-RETARDER TEMP
138 A	ABS SYSTEM
139	ABS SYSTEM
139	WORLD TRANSM-OUTPUT SPEED HI
140	ABS SYSTEM
140	WORLD TRANSM-OUTPUT SPEED LO
141	ABS SYSTEM
141	WORLD TRANSM-ENGINE SPEED HI
142	ABS SYSTEM
142	WORLD TRANSM-SERIAL COM. A
143	ABS SYSTEM
143	WORLD TRANSM-ECU BATTERY GRD
143 A	ABS SYSTEM
143 W	WORLD TRANSM-BATTERY GRD
144	ABS SYSTEM
144	WORLD TRANSM-ECU CHASSIS GRD
144 A	ABS SYSTEM
145	ABS SYSTEM
146	ABS SYSTEM
146 A	TRANSMISSION-12V IGNITION
146	WORLD TRANSM-IGNITION SENSE
146 W	WORLD TRANSM-12V IGNITION
146 X	WORLD TRANSM-12V IGNITION
147	ABS SYSTEM
147	WORLD TRANSM-OIL TEMP
147 A	ETHER COLD START & D.R.L.
147 C	ETHER COLD START
148	ABS SYSTEM
148	WORLD TRANSM-OUTPUT SPEED LO
149	ABS SYSTEM
149	WORLD TRANSM-TURBINE SPEED HI
149 A	ABS SYSTEM

No.	DESCRIPTION
150	DDEC III-ECM BATTERY GRD
150	WORLD TRANSM-ENGINE SPEED LO
150 A	DDEC III-ECM BATTERY GRD
151	ABS SYSTEM
151	DDEC III-ECM BATTERY GRD
151	WORLD TRANSM-SERIAL COM. B
151 A	ABS SYSTEM
152	ABS SYSTEM
152 A	ABS SYSTEM
153	ABS SYSTEM
153	WORLD TRANSM-SPARE INPUT (-)
154	ABS SYSTEM
154	WORLD TRANSM-ABS RET. INPUT
155	ABS SYSTEM
155	WORLD TRANSM-SPARE INPUT (-)
156	ABS SYSTEM
156	WORLD TRANSM-THROTTLE POS.
156 A	ABS SYSTEM
157	ABS SYSTEM
157	WORLD TRANSM-SPEEDO SIGNAL
157 A	ABS SYSTEM
157 B	ABS SYSTEM
157 D	A.T.C. SYSTEM
157 E	A.T.C. SYSTEM
158	WORLD TRANSM-DIMMER
160	ALARM & SIGNAL-TAG PRESS SW
160	WORLD TRANSM-SER. INTERFACE (-)
161	WORLD TRANSM-SIGNAL GRD
161 B	WORLD TRANSM-SIGNAL GRD
162	WORLD TRANSM-PRESS. SW C3
163	WORLD TRANSM-RETARDER ENABLE
164	WORLD TRANSM-RET. ACTUATOR SIGN
165	A/C & HEAT SYSTEM-TRANSMITER
165	WORLD TRANSM-OIL LEVEL SIGNAL
165 A	A/C & HEAT SYSTEM-TRANSMITER
165 B	A/C & HEAT SYSTEM-TRANSMITER
165 C	A/C & HEAT SYSTEM-TRANSMITER
165 D	A/C & HEAT SYSTEM-TRANSMITER
166 B	A/C & HEAT SYSTEM-EVAP. MOD.
167	A/C & HEAT SYSTEM-TEMP. CTR
167 A	A/C & HEAT SYSTEM-TEMP. CTR
168	A/C & HEAT SYSTEM-HUMIDISTAT
168	WORLD TRANSM-SER. INTERFACE (+)
168 A	A/C & HEAT SYSTEM-HUMIDISTAT
170	LUGGAGE DOOR LOCK
170 C	LUGGAGE DOOR LOCK
170 E	LUGGAGE DOOR LOCK
170 H	LUGGAGE DOOR LOCK
181 A	THERMOMETER INSIDE SENSOR
181 B	THERMOMETER INSIDE SENSOR

No.	DESCRIPTION
181 C	THERMOMETER OUTSIDE SENSOR
181 D	THERMOMETER OUTSIDE SENSOR
197	FUEL WATER FILTER
197 A	FUEL WATER FILTER
197 B	FUEL WATER FILTER
198	FILTER FUEL HEATER
199	AIR FILTER RESTRICTION SENDER
201	WORLD TRANSM-SPARE
202	WORLD TRANSM-SPARE
203	WORLD TRANSM-SPARE
204	WORLD TRANSM-SPARE
205	WORLD TRANSM-SPARE
206	WORLD TRANSM-SPARE
214	WORLD TRANSM-BACK UP SIGNAL
225	LAVATORY FAN
225 A	LAVATORY FAN
231	NEUTRAL SIGNAL GRD
231 A	NEUTRAL COIL RELAY FEED SIGNAL
231 W	NEUTRAL SIGNAL GRD (WCL)
240	DDEC III-ECM 12V FEEDING
241	DDEC III-ECM 12V FEEDING
251 A	DDEC III - DATA LOGGER 12 H.W.
251	DDEC III - PRODRIVER 12V H.W.
253	GALLEY-MICROWAVE
254	GALLEY-12V FRIGO NORCOLD
254 A	GALLEY-FRIGO
255	GALLEY-COFEEMAKER
255 A	GALLEY-COFEEMAKER
257	WINDSHIELD HEATED
257 A	WINDSHIELD HEATED
257 B	WINDSHIELD HEATED
257 C	WINDSHIELD HEATED
257 D	WINDSHIELD HEATED SPARE
257 E	WINDSHIELD HEATED SPARE
258	WINDSHIELD HEATED
258 A	WINDSHIELD HEATED
259	WINDSHIELD HEATED
259 A	WINDSHIELD HEATED
260	WINDOW AJAR
290	FAN CLUTCH RADIATOR
290	FAN CLUTCH RADIATOR
291	FAN CLUTCH RADIATOR SPD 1
292	FAN CLUTCH RADIATOR SPD 2
300	DOOR AJAR MAGN.SW. (WCL)
300 A	POWER SYSTEM SW. (WCL)
300 B	DOOR AJAR ALARM (WCL)
301	POWER SYSTEM SW. (WCL)
302	DOOR AJAR T.T.LT. (WCL)
302 A	DOOR AJAR ALARM SIGN.(WCL)
302 B	DOOR AJAR MAGN.SW. (WCL)

CIRCUIT NUMBER CODE

No.	DESCRIPTION
303	REMOTE WALL SW. DWN (WCL)
304	REMOTE WALL SW. UP (WCL)
305	PARK. BRAKE SOL. VALVE (WCL)
305 A	PARK. BRAKE SAFETY SW. (WCL)
306	CONTROL SYSTEM (WCL RICON)
307	CONTROL SYSTEM (WCL RICON)
308	CONTROL SYSTEM (WCL RICON)
309	CONTROL SYSTEM (WCL RICON)
310	EATON TRANSMISSION
311	EATON TRANSMISSION
312	EATON TRANSMISSION
313	EATON TRANSMISSION
314	EATON TRANSMISSION
315	EATON TRANSMISSIOM
316	EATON TRANSMISSION - EPL
317	EATON TRANSMISSION
318	EATON TRANSMISSION
319	EATON TRANSMISSION
320	EATON TRANSMISSION
321	EATON TRANSMISSION
322	EATON TRANSMISSIION
323	EATON TRANSMISSION
324	EATON TRANSMISSION
325	EATON TRANSMISSION
326	EATON TRANSMISSION
327	EATON TRANSMISSION
328	EATON TRANSMISSION
329	EATON TRANSMISSION
330	EATON TRANSMISSION - EPL
331	EATON TRANSMISSION - EPL
332	EATON TRANSMISSION
333	EATON TRANSMISSION - 12V BATTERY
417	DDEC III-LIMIT SPEED GOVERNOR
419	DDEC III-CHECK ENGINE LIGHT
439	DDEC III-12V IGNITION
440	DDEC III-12V IGNITION
440 A	DDEC III-12V IGNITION
451	DDEC III-A/C FAN CLUTCH
505	DDEC III-TACHOMETER DRIVE
509	DDEC III-STOP ENGINE LIGHT
510	DDEC III-FAST IDLE SIGNAL
524	DDEC III-ENGINE BRAKE DISABLE
525	DDEC III-FAST IDLE SIGNAL
528	DDEC III-STOP ENG. OVERRIDE
531	DDEC III-CRUISE CLUTCH RELEASE
540	DDEC III-CRUISE ENABLE LTS.
541	DDEC III-CRUISE SET SW
543	DDEC III-CRUISE STOP SW CUT IN
544	DDEC III-CRUISE ON/OFF SW
545	DDEC III-CRUISE RESUME SW

No.	DESCRIPTION
555	DDEC III-FAN CLUTCH SPEED# 1
556	DDEC III-VEHICLE SPEED (+)
557	DDEC III-VEHICLE SPEED (-)
563	DDEC III-FAN CLUTCH SPEED# 2
564	DDEC III-DIGITAL OUTPUT
565	DDEC III-ENGINE BRAKE ACTIVE
583	DDEC III-ENGINE BRAKE 4 CYL.
900	DDEC III-DATA LINK (+)
901	DDEC III-DATA LINK (-)
908	DDEC III-HYDRAULIC PWM#1 OUTPUT
916	DDEC III-SENSOR SUPPLY (5VDC)
925	J1939-HIGH
926	J1939-LOW
927	J1939-SHIELD
952	DDEC III-SENSOR RETURN
953	DDEC III-BATTERY GRD
979	DDEC III-ENGINE BRAKE 2 CYL.

No.	DESCRIPTION

No.	DESCRIPTION

CIRCUIT BREAKERS CODE

No.	PAGE	AMP.	#PREV.	LOCATION	FUNCTION
CB 1	2	40A	560703	BAT. CPT.	12V IGNITION
CB 2	1.1	30A	870690	BAT. CPT.	12V HOT WIRE
CB 3	1.1	40A	560703	BAT. CPT.	12V FEED RR. JCT. BOX
CB 4	1.1	40A	560703	BAT. CPT.	12V FEED FR. JCT. BOX
CB 5	1.1	30A	870690	BAT. CPT.	24V HOT WIRE
CB 6	1.1	90A	560298	BAT. CPT.	24V FEED RR. JCT. BOX
CB 7	1.1	90A	560298	BAT. CPT.	24V FEED FR. JCT. BOX
CB 8	1.1	150A	560299	BAT. CPT.	24V EVAPORATOR FAN MOTOR
CB 10	4	8A	561791	FR. JCT. BOX	MASTER KEY SWITCH
CB 16	4	8A	561791	RR. JCT. BOX	ENGINE-RR. CTRL & START SW.
CB 18	4	6A	561790	RR. JCT. BOX	ENGINE-FR. CTRL SW.
CB 19	5	15A	561793	BAT. CPT.	E.C.M. DDEC III 12V POWER
CB 20	5	15A	561793	BAT. CPT.	E.C.M. DDEC III 12V POWER
CB 21	5	6A	561790	BAT. CPT.	E.C.M. DDEC III 12V IGNITION
CB 24	6	20A	561794	BAT. CPT.	WORLD TRANSMISSION 12V POWER
CB 26	9.3	10A	561792	RR. JCT. BOX	BACK-UP LTS
CB 27	7	8A	561791	FR. JCT. BOX	24V IGNITION DASH ACCESSORIES
CB 28	7	6A	561790	FR. JCT. BOX	12V IGNITION DASH ACCESSORIES
CB 34	9.3	6A	561792	RR. JCT. BOX	BACK-UP ALARM
CB 35	9.3	15A	561790	FR. JCT. BOX	FOG & HAZARD DASH SW.
CB 37	9.1	6A	561790	FR. JCT. BOX	HEAD & MULTI-FUNCTION LEVEL SW.
CB 38	9.1	10A	561792	FR. JCT. BOX	FR. MARKER LTS
CB 39	9.1	20A	561794	FR. JCT. BOX	CLEARANCE & IDENTIFICATION LTS
CB 40	9.1	8A	561791	FR. JCT. BOX	FR. CLEARANCE & IDENTIFICATION LTS
CB 41	9.1	8A	561791	RR. JCT. BOX	RR. CLEARANCE & IDENTIFICATION LTS
CB 42	9.1	8A	561791	RR. JCT. BOX	RR. TAIL & LICENCE LTS
CB 43	9.1	20A	561794	FR. JCT. BOX	HEADLAMP (HI)
CB 44	9.1	15A	561793	FR. JCT. BOX	HEADLAMP (LO)
CB 45	9.2	10A	561792	FR. JCT. BOX	WIPER CTRL MULTI-FUNCTION LEVEL SW.
CB 46	9.2	20A	561794	FR. JCT. BOX	FLASHER & HAZARD UNIT
CB 48	9.3	6A	561790	FR. JCT. BOX	STOP LTS PRESSURE SW.
CB 49	9.3	15A	561793	RR. JCT. BOX	STOP & CYCLOP LTS
CB 51	10	10A	561792	FR. JCT. BOX	UPPER WIPER CTRL SW.
CB 52	11.1	15A	561793	RR. JCT. BOX	LUGGAGE & DOOR AJAR LTS
CB 57	11.2	8A	561791	FR. JCT. BOX	DASH LTS RHEOSTAT
CB 58	13.1	6A	561790	FR. JCT. BOX	HVAC DASH MODULE
CB 63	11.4	8A	561791	FR. SERVICE.CPT	110V FLUORESCENT LH
CB 64	11.4	8A	561791	FR. SERVICE.CPT	110V FLUORESCENT RH
CB 70	13.1	6A	561790	FR. JCT. BOX	A/C & HEAT SW.
CB 71	13.1	10A	561792	RR. JCT. BOX	A/C & HEAT LOGIC PANEL
CB 72	13.1	10A	561792	RR. JCT. BOX	A/C COMPRESSOR CLUTCH
CB 73	13.1	15A	561793	RR. JCT. BOX	WATER PUMP
CB 77	13.2	40A	560703	BAT. CPT.	CONDENSER FAN MOTOR RH
CB 78	13.2	40A	560703	BAT. CPT.	CONDENSER FAN MOTOR LH
CB 79	13.2	15A	561793	FR. JCT. BOX	DRIVER'S HTR FAN SPEED CTRL MODULE
CB 85	11.2	10A	561790	FR. JCT. BOX	ENTRANCE DOOR (SEDAN) & STEP LTS
CB 93	1.2	30A	870690	BAT. CPT.	SOUND SYSTEM 12V FEEDING
CB 94	1.2	30A	870690	BAT. CPT.	SOUND SYSTEM 12V FEEDING
CB 95	20.1	10A	561792	S.S. JCT. PANEL	SOUND SYSTEM AMPLI
CB 96	20.1	10A	561792	S.S. JCT. PANEL	VIDEO SYSTEM
CB 97	20.1	10A	561792	S.S. JCT. PANEL	SOUND SYSTEM B/U P.A. AMPLI
CB 98	20.1	15A	561793	S.S. JCT. PANEL	SOUND SYSTEM RADIO & CD
CB 99	20.7	15A	561793	S.S. JCT. PANEL	SEAT AUDIO SYSTEM
CB 105	21	6A	561790	FR. JCT. BOX	E.C.U. ABS
CB 106	21	10A	561792	FR. JCT. BOX	E.C.U. ABS
CB 107	21	10A	561792	FR. JCT. BOX	E.C.U. ABS
CB 124	8	6A	561790	RR. JCT. BOX	RADIATOR FAN CLUTCH
CB 126	25.1	150A	560299	BAT. CPT.	WHELL CHAIR LIFT MOTOR PUMP STE.

No.	PAGE	AMP.	#PREV.	LOCATION	FUNCTION
CB 126	25.2	90A	560298	BAT. CPT.	WHELL CHAIR LIFT MOTOR PUMP RICON
CB 127	13.3	15A	561793	RR. JCT. BOX	HAT-RACK FAN L.H.
CB 128	13.3	15A	561793	RR. JCT. BOX	HAT-RACK FAN R.H.
CB 129	7.2	6A	561790	FR. JCT. BOX	CLUSTER
CB 130	28	6A	561790	FR. JCT. BOX	CLUSTER

CIRCUIT BREAKERS CODE

No.	PAGE	AMP.	#PREV.	LOCATION	FUNCTION
CB 1	2	40A	560703	BAT. CPT.	12V IGNITION
CB 2	1.1	40A	870093	BAT. CPT.	12V HOT WIRE
CB 3	1.1	40A	560703	BAT. CPT.	12V FEED RR. JCT. BOX
CB 4	1.1	40A	560703	BAT. CPT.	12V FEED FR. JCT. BOX
CB 5	1.1	30A	870690	BAT. CPT.	24V HOT WIRE
CB 6	1.1	90A	560298	BAT. CPT.	24V FEED RR. JCT. BOX
CB 7	1.1	90A	560298	BAT. CPT.	24V FEED FR. JCT. BOX
CB 8	1.1	150A	560299	BAT. CPT.	24V EVAPORATOR FAN MOTOR
CB 10	4	8A	561791	FR. JCT. BOX	MASTER KEY SWITCH
CB 16	4	8A	561791	RR. JCT. BOX	ENGINE-RR. CTRL & START SW.
CB 18	4	6A	561790	RR. JCT. BOX	ENGINE-FR. CTRL SW.
CB 19	5	15A	561793	BAT. CPT.	E.C.M. DDEC 12V POWER
CB 20	5	15A	561793	BAT. CPT.	E.C.M. DDEC 12V POWER
CB 21	5	6A	561790	BAT. CPT.	E.C.M. DDEC 12V IGNITION
CB 24	6	25A	561794	BAT. CPT.	WORLD TRANSMISSION & EATON 12V POWER
CB 26	9.3	10A	561792	RR. JCT. BOX	BACK-UP LTS
CB 27	7	8A	561791	FR. JCT. BOX	24V IGNITION DASH ACCESSORIES
CB 28	7	6A	561790	FR. JCT. BOX	12V IGNITION DASH ACCESSORIES
CB 34	9.3	6A	561792	RR. JCT. BOX	BACK-UP ALARM
CB 35	9.3	15A	561790	FR. JCT. BOX	FOG & HAZARD DASH SW.
CB 37	9.1	6A	561790	FR. JCT. BOX	HEAD & MULTI-FUNCTION LEVEL SW.
CB 38	9.1	10A	561792	FR. JCT. BOX	FR. MARKER LTS
CB 39	9.1	20A	561794	FR. JCT. BOX	CLEARANCE & IDENTIFICATION LTS
CB 40	9.1	8A	561791	FR. JCT. BOX	FR. CLEARANCE & IDENTIFICATION LTS
CB 41	9.1	8A	561791	RR. JCT. BOX	RR. CLEARANCE & IDENTIFICATION LTS
CB 42	9.1	8A	561791	RR. JCT. BOX	RR. TAIL & LICENCE LTS
CB 43	9.1	20A	561794	FR. JCT. BOX	HEADLAMP (HI)
CB 44	9.1	15A	561793	FR. JCT. BOX	HEADLAMP (LO)
CB 45	9.2	10A	561792	FR. JCT. BOX	WIPER CTRL MULTI-FUNCTION LEVEL SW.
CB 46	9.2	20A	561794	FR. JCT. BOX	FLASHER & HAZARD UNIT
CB 48	9.3	6A	561790	FR. JCT. BOX	STOP LTS PRESSURE SW.
CB 49	9.3	15A	561793	RR. JCT. BOX	STOP & CYCLOP LTS
CB 51	10	10A	561792	FR. JCT. BOX	UPPER WIPER CTRL SW.
CB 52	11.1	15A	561793	RR. JCT. BOX	LUGGAGE & DOOR AJAR LTS
CB 57	11.2	8A	561791	FR. JCT. BOX	DASH LTS RHEOSTAT
CB 58	13.1	6A	561790	FR. JCT. BOX	HVAC DASH MODULE
CB 63	11.4	8A	561791	FR. SERVICE.CPT	110V FLUORESCENT LH
CB 64	11.4	8A	561791	FR. SERVICE.CPT	110V FLUORESCENT RH
CB 70	22.1	6A	561790	FR. JCT. BOX	UPPER HEATING WINDSHIELD SW.
CB 71	13.1	10A	561792	RR. JCT. BOX	A/C & HEAT LOGIC PANEL
CB 72	13.2	10A	561792	RR. JCT. BOX	A/C COMPRESSOR CLUTCH
CB 73	13.2	15A	561793	RR. JCT. BOX	WATER PUMP
CB 77	13.1	40A	870093	BAT. CPT.	CONDENSER FAN MOTOR RH
CB 78	13.1	40A	870093	BAT. CPT.	CONDENSER FAN MOTOR LH
CB 79	13.2	15A	561793	FR. JCT. BOX	DRIVER'S HTR FAN SPEED CTRL MODULE
CB 85	11.2	10A	561790	FR. JCT. BOX	ENTRANCE DOOR (SEDAN) & STEP LTS
CB 93	1.2	30A	870690	BAT. CPT.	SOUND SYSTEM 12V FEEDING
CB 94	1.2	30A	870690	BAT. CPT.	SOUND SYSTEM 12V FEEDING
CB 95	20.1	10A	561792	S.S. JCT. PANEL	SOUND SYSTEM AMPLI
CB 96	20.1	10A	561792	S.S. JCT. PANEL	VIDEO SYSTEM
CB 97	20.1	10A	561792	S.S. JCT. PANEL	SOUND SYSTEM B/U P.A. AMPLI
CB 98	20.1	15A	561793	S.S. JCT. PANEL	SOUND SYSTEM RADIO & CD
CB 99	20.7	15A	561793	S.S. JCT. PANEL	SEAT AUDIO SYSTEM
CB 105	21	6A	561790	FR. JCT. BOX	E.C.U. ABS
CB 106	21	10A	561792	FR. JCT. BOX	E.C.U. ABS
CB 107	21	10A	561792	FR. JCT. BOX	E.C.U. ABS
CB 124	8	6A	561790	RR. JCT. BOX	RADIATOR FAN CLUTCH
CB 126	25.1	150A	560299	BAT. CPT.	WHELL CHAIR LIFT MOTOR PUMP STE.

No.	PAGE	AMP.	#PREV.	LOCATION	FUNCTION
CB 126	25.2	90A	560298	BAT. CPT.	WHELL CHAIR LIFT MOTOR PUMP RICON
CB 127	13.3	15A	561793	RR. JCT. BOX	HAT-RACK FAN L.H.
CB 128	13.3	15A	561793	RR. JCT. BOX	HAT-RACK FAN R.H.
CB 129	7.2	6A	561790	FR. JCT. BOX	CLUSTER
CB 130	28	6A	561790	FR. JCT. BOX	CLUSTER

CIRCUIT BREAKERS CODE

No.	PAGE	AMP.	#PREV.	LOCATION	FUNCTION
CB 1	2	40A	560703	BAT. CPT.	12V IGNITION
CB 2	1.1	40A	870093	BAT. CPT.	12V HOT WIRE
CB 3	1.1	40A	560703	BAT. CPT.	12V FEED RR. JCT. BOX
CB 4	1.1	40A	560703	BAT. CPT.	12V FEED FR. JCT. BOX
CB 5	1.1	30A	870690	BAT. CPT.	24V HOT WIRE
CB 6	1.1	90A	560298	BAT. CPT.	24V FEED RR. JCT. BOX
CB 7	1.1	90A	560298	BAT. CPT.	24V FEED FR. JCT. BOX
CB 8	1.1	150A	560299	BAT. CPT.	24V EVAPORATOR FAN MOTOR
CB 10	4	8A	561791	FR. JCT. BOX	MASTER KEY SWITCH
CB 16	4	8A	561791	RR. JCT. BOX	ENGINE-RR. CTRL & START SW.
CB 18	4	6A	561790	RR. JCT. BOX	ENGINE-FR. CTRL SW.
CB 19	5	15A	561793	BAT. CPT.	E.C.M. DDEC 12V POWER
CB 20	5	15A	561793	BAT. CPT.	E.C.M. DDEC 12V POWER
CB 21	5	10A	561792	RR. JCT. BOX	E.C.M. DDEC and WTEC 12V IGNITION
CB 24	6	25A	561794	BAT. CPT.	WORLD TRANSMISSION & EATON 12V POWER
CB 26	9.3	10A	561792	RR. JCT. BOX	BACK-UP LTS
CB 27	7	8A	561791	FR. JCT. BOX	24V IGNITION DASH ACCESSORIES
CB 28	7	6A	561790	FR. JCT. BOX	12V IGNITION DASH ACCESSORIES
CB 34	9.3	6A	561792	RR. JCT. BOX	BACK-UP ALARM
CB 35	9.3	15A	561790	FR. JCT. BOX	FOG & HAZARD DASH SW.
CB 37	9.1	6A	561790	FR. JCT. BOX	HEAD & MULTI-FUNCTION LEVEL SW.
CB 38	9.1	10A	561792	FR. JCT. BOX	FR. MARKER LTS
CB 39	9.1	20A	561794	FR. JCT. BOX	CLEARANCE & IDENTIFICATION LTS
CB 40	9.1	8A	561791	FR. JCT. BOX	FR. CLEARANCE & IDENTIFICATION LTS
CB 41	9.1	8A	561791	RR. JCT. BOX	RR. CLEARANCE & IDENTIFICATION LTS
CB 42	9.1	8A	561791	RR. JCT. BOX	RR. TAIL & LICENCE LTS
CB 43	9.1	20A	561794	FR. JCT. BOX	HEADLAMP (HI)
CB 44	9.1	15A	561793	FR. JCT. BOX	HEADLAMP (LO)
CB 45	9.2	10A	561792	FR. JCT. BOX	WIPER CTRL MULTI-FUNCTION LEVEL SW.
CB 46	9.2	20A	561794	FR. JCT. BOX	FLASHER & HAZARD UNIT
CB 48	9.3	6A	561790	FR. JCT. BOX	STOP LTS PRESSURE SW.
CB 49	9.3	15A	561793	RR. JCT. BOX	STOP & CYCLOP LTS
CB 51	10	10A	561792	FR. JCT. BOX	UPPER WIPER CTRL SW.
CB 52	11.1	15A	561793	RR. JCT. BOX	LUGGAGE & DOOR AJAR LTS
CB 57	11.2	8A	561791	FR. JCT. BOX	DASH LTS RHEOSTAT
CB 58	13.1	6A	561790	FR. JCT. BOX	HVAC DASH MODULE
CB 63	11.4	8A	561791	FR. SERVICE.CPT	110V FLUORESCENT LH
CB 64	11.4	8A	561791	FR. SERVICE.CPT	110V FLUORESCENT RH
CB 70	22.1	6A	561790	FR. JCT. BOX	UPPER HEATING WINDSHIELD SW.
CB 71	13.1	10A	561792	RR. JCT. BOX	A/C & HEAT LOGIC PANEL
CB 72	13.2	10A	561792	RR. JCT. BOX	A/C COMPRESSOR CLUTCH
CB 73	13.2	15A	561793	RR. JCT. BOX	WATER PUMP
CB 77	13.1	40A	870093	BAT. CPT.	CONDENSER FAN MOTOR RH
CB 78	13.1	40A	870093	BAT. CPT.	CONDENSER FAN MOTOR LH
CB 79	13.2	15A	561793	FR. JCT. BOX	DRIVER'S HTR FAN SPEED CTRL MODULE
CB 85	11.2	10A	561790	FR. JCT. BOX	ENTRANCE DOOR (SEDAN) & STEP LTS
CB 93	1.2	30A	870690	BAT. CPT.	SOUND SYSTEM 12V FEEDING
CB 94	1.2	30A	870690	BAT. CPT.	SOUND SYSTEM 12V FEEDING
CB 95	20.1	10A	561792	S.S. JCT. PANEL	SOUND SYSTEM AMPLI
CB 96	20.1	10A	561792	S.S. JCT. PANEL	VIDEO SYSTEM
CB 97	20.1	10A	561792	S.S. JCT. PANEL	SOUND SYSTEM B/U P.A. AMPLI
CB 98	20.1	15A	561793	S.S. JCT. PANEL	SOUND SYSTEM RADIO & CD
CB 99	20.7	15A	561793	S.S. JCT. PANEL	SEAT AUDIO SYSTEM
CB 105	21	6A	561790	FR. JCT. BOX	E.C.U. ABS
CB 106	21	10A	561792	FR. JCT. BOX	E.C.U. ABS
CB 107	21	10A	561792	FR. JCT. BOX	E.C.U. ABS
CB 124	8	6A	561790	RR. JCT. BOX	RADIATOR FAN CLUTCH
CB 126	25.1	150A	560299	BAT. CPT.	WHELL CHAIR LIFT MOTOR PUMP STE.

No.	PAGE	AMP.	#PREV.	LOCATION	FUNCTION
CB 126	25.2	90A	560298	BAT. CPT.	WHELL CHAIR LIFT MOTOR PUMP RICON
CB 127	13.3	15A	561793	RR. JCT. BOX	HAT-RACK FAN L.H.
CB 128	13.3	15A	561793	RR. JCT. BOX	HAT-RACK FAN R.H.
CB 129	7.2	6A	561790	FR. JCT. BOX	CLUSTER
CB 130	28	6A	561790	FR. JCT. BOX	CLUSTER

CIRCUIT BREAKERS CODE

No.	PAGE	AMP.	#PREV.	LOCATION	FUNCTION
CB 1	2	40A	562686	BAT. CPT.	12V IGNITION
CB 2	1.1	40A	870093	BAT. CPT.	12V HOT WIRE
CB 3	1.1	40A	562686	BAT. CPT.	12V FEED RR. JCT. BOX
CB 4	1.1	70A	562687	BAT. CPT.	12V FEED FR. JCT. BOX
CB 5	1.1	30A	870690	BAT. CPT.	24V HOT WIRE
CB 6	1.1	90A	562683	BAT. CPT.	24V FEED RR. JCT. BOX
CB 7	1.1	90A	562683	BAT. CPT.	24V FEED FR. JCT. BOX
CB 8	1.1	150A	560299	BAT. CPT.	24V EVAPORATOR FAN MOTOR
CB 10	4	8A	561791	FR. JCT. BOX	MASTER KEY SWITCH
CB 16	4	8A	561791	RR. JCT. BOX	ENGINE-RR. CTRL & START SW.
CB 18	4	6A	561790	RR. JCT. BOX	ENGINE-FR. CTRL SW.
CB 19	5	15A	561793	BAT. CPT.	E.C.M. DDEC 12V POWER
CB 20	5	15A	561793	BAT. CPT.	E.C.M. DDEC 12V POWER
CB 21	5	10A	561792	RR. JCT. BOX	E.C.M. DDEC and WTEC 12V IGNITION
CB 24	6	25A	561794	BAT. CPT.	WORLD TRANSMISSION & EATON 12V POWER
CB 26	9.3	10A	561792	RR. JCT. BOX	BACK-UP LTS
CB 27	7	8A	561791	FR. JCT. BOX	24V IGNITION DASH ACCESSORIES
CB 28	7	6A	561790	FR. JCT. BOX	12V IGNITION DASH ACCESSORIES
CB 34	9.3	6A	561792	RR. JCT. BOX	BACK-UP ALARM
CB 35	9.3	15A	561790	FR. JCT. BOX	FOG & HAZARD DASH SW.
CB 37	9.1	6A	561790	FR. JCT. BOX	HEAD & MULTI-FUNCTION LEVEL SW.
CB 38	9.1	10A	561792	FR. JCT. BOX	FR. MARKER LTS
CB 39	9.1	20A	561794	FR. JCT. BOX	CLEARANCE & IDENTIFICATION LTS
CB 40	9.1	8A	561791	FR. JCT. BOX	FR. CLEARANCE & IDENTIFICATION LTS
CB 41	9.1	8A	561791	RR. JCT. BOX	RR. CLEARANCE & IDENTIFICATION LTS
CB 42	9.1	8A	561791	RR. JCT. BOX	RR. TAIL & LICENCE LTS
CB 43	9.1	20A	561794	FR. JCT. BOX	HEADLAMP (HI)
CB 44	9.1	15A	561793	FR. JCT. BOX	HEADLAMP (LO)
CB 45	9.2	10A	561792	FR. JCT. BOX	WIPER CTRL MULTI-FUNCTION LEVEL SW.
CB 46	9.2	20A	561794	FR. JCT. BOX	FLASHER & HAZARD UNIT
CB 48	9.3	6A	561790	FR. JCT. BOX	STOP LTS PRESSURE SW.
CB 49	9.3	15A	561793	RR. JCT. BOX	STOP & CYCLOP LTS
CB 51	10	10A	561792	FR. JCT. BOX	UPPER WIPER CTRL SW.
CB 52	11.1	15A	561793	RR. JCT. BOX	LUGGAGE & DOOR AJAR LTS
CB 57	11.2	8A	561791	FR. JCT. BOX	DASH LTS RHEOSTAT
CB 58	13.1	6A	561790	FR. JCT. BOX	HVAC DASH MODULE
CB 63	11.4	8A	561791	FR. SERVICE.CPT	110V FLUORESCENT LH
CB 64	11.4	8A	561791	FR. SERVICE.CPT	110V FLUORESCENT RH
CB 70	22.1	6A	561790	FR. JCT. BOX	UPPER HEATING WINDSHIELD SW.
CB 71	13.1	10A	561792	RR. JCT. BOX	A/C & HEAT LOGIC PANEL
CB 72	13.2	10A	561792	RR. JCT. BOX	A/C COMPRESSOR CLUTCH
CB 73	13.2	15A	561793	RR. JCT. BOX	WATER PUMP
CB 77	13.1	40A	870093	BAT. CPT.	CONDENSER FAN MOTOR RH
CB 78	13.1	40A	870093	BAT. CPT.	CONDENSER FAN MOTOR LH
CB 79	13.2	15A	561793	FR. JCT. BOX	DRIVER'S HTR FAN SPEED CTRL MODULE
CB 85	11.2	10A	561790	FR. JCT. BOX	ENTRANCE DOOR (SEDAN) & STEP LTS
CB 93	1.2	30A	870690	BAT. CPT.	SOUND SYSTEM 12V FEEDING
CB 94	1.2	30A	870690	BAT. CPT.	SOUND SYSTEM 12V FEEDING
CB 95	20.1	10A	561792	S.S. JCT. PANEL	SOUND SYSTEM AMPLI
CB 96	20.1	10A	561792	S.S. JCT. PANEL	VIDEO SYSTEM
CB 97	20.1	10A	561792	S.S. JCT. PANEL	SOUND SYSTEM B/U P.A. AMPLI
CB 98	20.1	15A	561793	S.S. JCT. PANEL	SOUND SYSTEM RADIO & CD
CB 99	20.7	15A	561793	S.S. JCT. PANEL	SEAT AUDIO SYSTEM
CB 105	21	6A	561790	FR. JCT. BOX	E.C.U. ABS
CB 106	21	10A	561792	FR. JCT. BOX	E.C.U. ABS
CB 107	21	10A	561792	FR. JCT. BOX	E.C.U. ABS
CB 124	8	6A	561790	RR. JCT. BOX	RADIATOR FAN CLUTCH
CB 126	25.1	150A	560299	BAT. CPT.	WHELL CHAIR LIFT MOTOR PUMP STE.

No.	PAGE	AMP.	#PREV.	LOCATION	FUNCTION
CB 126	25.2	90A	560298	BAT. CPT.	WHELL CHAIR LIFT MOTOR PUMP RICON
CB 127	13.3	15A	561793	RR. JCT. BOX	HAT-RACK FAN L.H.
CB 128	13.3	15A	561793	RR. JCT. BOX	HAT-RACK FAN R.H.
CB 129	7.2	6A	561790	FR. JCT. BOX	CLUSTER
CB 130	28	6A	561790	FR. JCT. BOX	CLUSTER

CIRCUIT BREAKERS CODE

No.	PAGE	AMP.	#PREV.	LOCATION	FUNCTION
CB 1	2	40A	562686	BAT. CPT.	12V IGNITION
CB 2	1.1	40A	870093	BAT. CPT.	12V HOT WIRE
CB 3	1.1	40A	562686	BAT. CPT.	12V FEED RR. JCT. BOX
CB 4	1.1	70A	562687	BAT. CPT.	12V FEED FR. JCT. BOX
CB 5	1.1	30A	870690	BAT. CPT.	24V HOT WIRE
CB 6	1.1	90A	562683	BAT. CPT.	24V FEED RR. JCT. BOX
CB 7	1.1	90A	562683	BAT. CPT.	24V FEED FR. JCT. BOX
CB 8	1.1	150A	560299	BAT. CPT.	24V EVAPORATOR FAN MOTOR
CB 10	4	8A	561791	FR. JCT. BOX	MASTER KEY SWITCH
CB 16	4	8A	561791	RR. JCT. BOX	ENGINE-RR. CTRL & START SW.
CB 18	4	6A	561790	RR. JCT. BOX	ENGINE-FR. CTRL SW.
CB 19	5	15A	561793	BAT. CPT.	E.C.M. DDEC 12V POWER
CB 20	5	15A	561793	BAT. CPT.	E.C.M. DDEC 12V POWER
CB 21	5	10A	561792	RR. JCT. BOX	E.C.M. DDEC and WTEC 12V IGNITION
CB 24	6	25A	561794	BAT. CPT.	WORLD TRANSMISSION & EATON 12V POWER
CB 26	9.3	10A	561792	RR. JCT. BOX	BACK-UP LTS
CB 27	7	8A	561791	FR. JCT. BOX	24V IGNITION DASH ACCESSORIES
CB 28	7	6A	561790	FR. JCT. BOX	12V IGNITION DASH ACCESSORIES
CB 34	9.3	6A	561792	RR. JCT. BOX	BACK-UP ALARM
CB 35	9.3	15A	561790	FR. JCT. BOX	FOG & HAZARD DASH SW.
CB 37	9.1	6A	561790	FR. JCT. BOX	HEAD & MULTI-FUNCTION LEVEL SW.
CB 38	9.1	10A	561792	FR. JCT. BOX	FR. MARKER LTS
CB 39	9.1	20A	561794	FR. JCT. BOX	CLEARANCE & IDENTIFICATION LTS
CB 40	9.1	8A	561791	FR. JCT. BOX	FR. CLEARANCE & IDENTIFICATION LTS
CB 41	9.1	8A	561791	RR. JCT. BOX	RR. CLEARANCE & IDENTIFICATION LTS
CB 42	9.1	8A	561791	RR. JCT. BOX	RR. TAIL & LICENCE LTS
CB 43	9.1	20A	561794	FR. JCT. BOX	HEADLAMP (HI)
CB 44	9.1	15A	561793	FR. JCT. BOX	HEADLAMP (LO)
CB 45	9.2	10A	561792	FR. JCT. BOX	WIPER CTRL MULTI-FUNCTION LEVEL SW.
CB 46	9.2	20A	561794	FR. JCT. BOX	FLASHER & HAZARD UNIT
CB 48	9.3	6A	561790	FR. JCT. BOX	STOP LTS PRESSURE SW.
CB 49	9.3	15A	561793	RR. JCT. BOX	STOP & CYCLOP LTS
CB 51	10	10A	561792	FR. JCT. BOX	UPPER WIPER CTRL SW.
CB 52	11.1	15A	561793	RR. JCT. BOX	LUGGAGE & DOOR AJAR LTS
CB 57	11.2	8A	561791	FR. JCT. BOX	DASH LTS RHEOSTAT
CB 58	13.1	6A	561790	FR. JCT. BOX	HVAC DASH MODULE
CB 63	11.4	8A	561791	FR. SERVICE.CPT	110V FLUORESCENT LH
CB 64	11.4	8A	561791	FR. SERVICE.CPT	110V FLUORESCENT RH
CB 70	22.1	6A	561790	FR. JCT. BOX	UPPER HEATING WINDSHIELD SW.
CB 71	13.1	10A	561792	RR. JCT. BOX	A/C & HEAT LOGIC PANEL
CB 72	13.2	10A	561792	RR. JCT. BOX	A/C COMPRESSOR CLUTCH
CB 73	13.2	15A	561793	RR. JCT. BOX	WATER PUMP
CB 77	13.1	40A	870093	BAT. CPT.	CONDENSER FAN MOTOR RH
CB 78	13.1	40A	870093	BAT. CPT.	CONDENSER FAN MOTOR LH
CB 79	13.2	15A	561793	FR. JCT. BOX	DRIVER'S HTR FAN SPEED CTRL MODULE
CB 85	11.2	10A	561790	FR. JCT. BOX	ENTRANCE DOOR (SEDAN) & STEP LTS
CB 93	1.2	30A	870690	BAT. CPT.	SOUND SYSTEM 12V FEEDING
CB 94	1.2	30A	870690	BAT. CPT.	SOUND SYSTEM 12V FEEDING
CB 95	20.1	10A	561792	S.S. JCT. PANEL	SOUND SYSTEM AMPLI
CB 96	20.1	10A	561792	S.S. JCT. PANEL	VIDEO SYSTEM
CB 97	20.1	10A	561792	S.S. JCT. PANEL	SOUND SYSTEM B/U P.A. AMPLI
CB 98	20.1	15A	561793	S.S. JCT. PANEL	SOUND SYSTEM RADIO & CD
CB 99	20.7	15A	561793	S.S. JCT. PANEL	SEAT AUDIO SYSTEM
CB 105	21	6A	561790	FR. JCT. BOX	E.C.U. ABS
CB 106	21	10A	561792	FR. JCT. BOX	E.C.U. ABS
CB 107	21	10A	561792	FR. JCT. BOX	E.C.U. ABS
CB 124	8	6A	561790	RR. JCT. BOX	RADIATOR FAN CLUTCH
CB 126	25.1	150A	560299	BAT. CPT.	WHELL CHAIR LIFT MOTOR PUMP STE.

No.	PAGE	AMP.	#PREV.	LOCATION	FUNCTION
CB 126	25.2	90A	560298	BAT. CPT.	WHELL CHAIR LIFT MOTOR PUMP RICON
CB 127	13.3	15A	561793	RR. JCT. BOX	HAT-RACK FAN L.H.
CB 128	13.3	15A	561793	RR. JCT. BOX	HAT-RACK FAN R.H.
CB 129	7.2	6A	561790	FR. JCT. BOX	CLUSTER
CB 130	28	6A	561790	FR. JCT. BOX	CLUSTER
CB 131	4.2	6A	561790	RR. JCT. BOX	ALT. BOSCH
CB 132	4.2	6A	561790	RR. JCT. BOX	ALT. BOSCH

CONNECTORS CODE

NO	LOCATION	TYPE	CAVITY	#PIN HOUSING	#SOCKET HOUSING	
C X1	FR LH UPPER WHELL CPT-ABS	WABCO	34			X
C X2	FR LH UPPER WHELL CPT-ABS	WABCO	34			X
C X3	FR LH UPPER WHELL CPT-ABS	WABCO				X
C X4	FR LH UPPER WHELL CPT-ABS	WABCO				X
C S	RR JCT BOX ECU WORLD TR.	T & BET				X
C T	RR JCT BOX ECU WORLD TR.	T & BET				X
C V	RR JCT BOX ECU WORLD TR.	T & BET				X
CV I2	RR JCT BOX-WORLD TRANS. SHIFT & RET.					
C 1	FR JCT BOX COMPARTMENT	AMP CPC	14	561585	561584	
C 2	FR JCT BOX COMPARTMENT	AMP CPC	16	561639	561640	
C 3	FR JCT BOX COMPARTMENT	AMP CPC	24	561641	561643	
C 4	FR JCT BOX COMPARTMENT	AMP CPC	37	561644	561646	
C 5	FR SERVICE COMPT.-UNDERNEATH	AMP CPC	37	561644	561646	
C 6	FR SERVICE COMPT.-UNDERNEATH	AMP CPC	16	561639	561640	
C 7						
C 8	FR SERVICE COMPT.-UNDERNEATH	AMP CPC	24	561641	561643	
C 9	FR SERVICE COMPT.-UNDERNEATH	AMP CPC	24	561641	561643	
C 10						
C 11	FR SERVICE COMPARTMENT	AMP CPC	37	561644	561646	
C 12	FR SERVICE COMPARTMENT	AMP CPC	16	561639	561640	
C 13	LH CONSOLE-CTR MIRROR	AMP MNL	6	561552	561515	
C 14	UNDER DASH-LH MIRROR	AMP MNL	9	561661	561662	
C 15	RR JCT BOX	AMP CPC	24	561641	561643	
C 16	LH CONSOLE SW-CRUISE ON OFF	EATON	10	------	562763	
C 17	LH CONSOLE SW-CRUISE RESUME	EATON	10	------	562763	
C 18	LH CONSOLE SW-CRUISE SET	EATON	10	------	562763	
C 19	LH CONSOLE DECEL SW	EATON	10	------	562763	
C 20	RR JCT BOX	AMP CPC	37	561644	561646	
C 21	RR JCT BOX	AMP CPC	24	561641	561643	
C 22						
C 23						
C 24						
C 25						
C 26	HYD & MAN TRANSM.-NEUT.& B/U	PED WP	4	561610	561611	
C 27	HYD & MAN TRANSM.-SPEED SENS.	PED WP	2	561566	561690	
C 28						
C 29						
C 30						
C 31						
C 32	DDEC ENGINE-ECM	PED	30	------	561600	
C 33						
C 34						
C 35	RR JCT BOX	AMP CPC	24	561642	561643	
C 36						
C 37	RR SECTION-LH HAT RACK	MOLEX	6	562507	562503	
C 38	RR SECTION-RH HAT RACK	MOLEX	6	562507	562503	
C 39						
C 40						
C 41	LAVATORY ROOF FLUORESCENT	AMP MNL	2	560900	560898	
C 42	LAVATORY BACK WALL-WTR TANK	AMP MNL	2	560900	560898	
C 43	LAVATORY BACK WALL-ACCES.	AMP MNL	9	561661	561662	
C 44						
C 45	FR JCT BOX COMPARTMENT	AMP CPC	24	561642	561643	
C 46						
C 47	FR SERVICE COMPARTMENT	AMP CPC	16	561694	561695	
C 48						
C 49	BATTERIE COMPT.-LT	AMP MNL	2	561248	561247	
C 50	FR SERVICE COMPT.-LOW BUOY	PED WP	1	561605	561577	
C 51						
C 52	RR JCT BOX	AMP CPC	22	561709	561710	
C 53						
C 54						
C 55	RH SWITCH PANEL	AMP CPC	9	561636	561637	
C 56						
C 57						

NO	LOCATION	TYPE	CAVITY	#PIN HOUSING	#SOCKET HOUSING
C 58	RR JCT BOX AC PANEL	DEUTSCH	24	562280	562283
C 59	RR JCT BOX AC PANEL	AMP CPC	14	561584	561583
C 60	RR JCT BOX COMPT.-LT	AMP MNL	2	561248	561247
C 61	LUGGAGE COMPARTMENT LTS	AMP MNL	2	561248	561247
C 62	LUGGAGE COMPARTMENT LTS	AMP MNL	2	561248	561247
C 63	LUGGAGE COMPARTMENT LTS	AMP MNL	2	561248	561247
C 64	LUGGAGE COMPARTMENT LTS	AMP MNL	2	561248	561247
C 65	LUGGAGE COMPARTMENT LTS	AMP MNL	2	561248	561247
C 66	LUGGAGE COMPARTMENT LTS	AMP MNL	2	561248	561247
C 67	LUGGAGE COMPARTMENT LTS	AMP MNL	2	561248	561247
C 68	LUGGAGE COMPARTMENT LTS	AMP MNL	2	561248	561247
C 69	RR AXLE ACC-INSIDE PVC END	PED WP	6	561568	561578
C 70	LH CONSOLE	AMP CPC	16	561642	561643
C 71	FR JCT BOX COMPARTMENT	AMP CPC	37	561645	561646
C 72	FR JCT BOX COMPARTMENT	AMP CPC	24	561642	561643
C 73	DASH CENTER PANEL	AMP CPC	16	561639	561640
C 74	FR JCT BOX COMPARTMENT	AMP CPC	37	561645	561646
C 75					
C 76	LUGGAGE COMPT.-AIR RET.SENS.	AMP MNL	2	561248	561247
C 77	LUGGAGE COMPT.-AIR RET.SENS.	AMP MNL	2	561248	561247
C 78					
C 79					
C 80	LUGGAGE COMPT.-AIR RET.SENS.	AMP MNL	2	561248	561247
C 81	PASSENGER COMPT.-AISLE LTS	AMP MNL	2	560900	560898
C 82	ENTRANCE DOOR	MOLEX	6	562070	562069
C 83	ENTRANCE DOOR-PROIMITY SW	MOLEX	4	561477	561476
C 84	ENTRANCE DOOR-PRESSURE SW	PED WP	2	561566	561690
C 85	UNDER INSTRUMENT PANEL LH	AMP MTA-100 8	------	562248	------
C 86					
C 87	RR END ROOF	AMP CPC	9	561636	561637
C 88	RR END ROOF-CLEARANCE LTS	AMP MNL	2	560900	560898
C 89	RR END ROOF-B/U NONITOR	AMP CPC	4	561582	561581
C 90	RR JCT BOX	AMP CPC	15	561987	561986
C 91	RR JCT BOX	AMP CPC	37	561714	561713
C 92	FR LH UPPER WHELL CPT-ABS	AMP CPC	9	561635	561637
C 93	FR LH UPPER WHELL CPT-ABS		35	------	641094
C 94					
C 95					
C 96	FR AXLE ACCESSORIES	AMP CPC	14	561585	561585
C 97	RR AXLE ACC-INSIDE PVC END	PED WP	6	561568	561578
C 98	FR SERVICE COMPT-EL.FT.PEDAL	PED WP	3	561782	561781
C 99	FR SERVICE COMPT LTS	AMP MNL	2	561248	561247
C 100					
C 101	FR SERVICE COMPT-ELEC. HORNS	PED WP	2	561566	561690
C 102	FR SERV & SIDE CPT-FLASH. LH	GROTE	2	------	562155
C 103	FR SERV & SIDE CPT-MARKERS	GROTE	2	------	562155
C 104	FR SERV & SIDE CPT-FLASH. RH	GROTE	2	------	562155
C 105	FR SERVICE COMPT-LIQ.S.VALVE	PED WP	2	561566	561690
C 106	FR SERVICE COMPT-WATER VALVE	PED WP	2	561566	561690
C 107	EVAPORATOR COMPT-DAMPER	PED WP	2	561566	561690
C 108	FR SERVICE COMPT-KNEEL.SYS	PED WP	2	561566	561690
C 109	FR SERVICE COMPT-KNEEL.SYS	PED WP	2	561566	561690
C 110	FR SERVICE COMPT-KNEEL.SYS	PED WP	2	561566	561690
C 111	EVAPORATOR COMPT-DAMPER	DEUTSCH	2	562486	562485
C 112	EVAPORATOR COMPT-SPEED MOT CTRL	DEUTSCH	5	------	562566
C 113	BATT. & RR J.B.CPT.MARKER LT	GROTE	2	------	562155
C 114	RR J. BOX CPT DOOR DIR LT LH	GROTE	2	------	562155
C 115	ENGINE COMPT-AIR DRYER	PED WP	2	561566	561690
C 116	ENGINE COMPT. LTS	PED WP	1	561605	561577
C 117					
C 118	ENGINE COMPT-LAVATORY FAN	PED WP	2	561566	561690
C 119	ENGINE CPT RR DOOR RH LO LAMP	PED WP	6	561606	561607
C 120	ENGINE CPT RR DOOR LH LO LAMP	PED WP	6	561606	561607

CONNECTORS CODE

NO	LOCATION	TYPE	CAVITY	#PIN HOUSING	#SOCKET HOUSING	
C 121	BATTERIE CPT. DOOR DIR LT RH	GROTE	2	------	562155	
C 122	ENGINE CPT-UNLOAD TAG SYSTEM	PED WP	2	561566	561690	
C 123	TAG AXLE-UNLOAD TAG RH VALVE	PED WP	2	561566	561690	
C 124	ENGINE CPT-ETHER SW	PED WP	2	561566	561690	
C 125	ENGINE CPT-B/U ALARM	PED WP	2	561566	561690	
C 126	ENGINE CPT-FLUSHING PUMP	PED WP	2	561566	561690	
C 127	ENGINE CPT-FUEL FILTER	PED WP	2	561566	561690	
C 128	ENGINE CPT-A/C COMPR.CLUTCH	ITT SS	2	561813	561812	
C 129	ENGINE CPT-PRE-HEAT WATER	AMP FF	6	561672	561186	
C 130	ENGINE CPT-UNLOADER	ITT SS	2	561813	561812	
C 131	ENGINE CPT-UNLOADER	ITT SS	2	561813	561812	
C 132	ENGINE CPT-A/C LO PRESS SW	PED WP	2	561566	561690	
C 133	ENGINE CPT-A/C HI PRESS SW	PED WP	2	561566	561690	
C 134	FR JCT BOX-LUGGAGE DIODE CON.	AMP MNL	15	561987	561986	
C 135	FR JCT BOX-LUGGAGE DIODE CON.	AMP MNL	15	561987	561986	
C 136						
C 137	RR JCT BOX-TRANSMITTER	AMP MNL	2	560900	560898	
C 138	RR JCT BOX-CONTROL MODULE	AMP HDP	15	------	562012	
C 139	RR JCT BOX-LOGIC MODULE	AMP HDP	15	562011	------	
C 140	HVAC DASH MODULE THERMOMETER	MOLEX	4			X
C 141	INSTRUMENT PANEL LH UNLOAD TAG	AMP	2	561248	561247	
C 142	LAVATORY DOOR WALL	AMP MNL	2	561248	561247	
C 143	LAVATORY DOOR WALL	AMP MNL	3	560908	562006	
C 144	UNDER LH SEAT-AISLE LTS	AMP MNL	4	560851	560852	
C 145	RR JCT BOX CPT-RR SIDE LTS	AMP MNL	9	561670	561669	
C 146	ENGINE CPT-MODULATOR VALVE	AMPHENOL	2	------	560412	
C 147	BATT & RR J.B.CPT-DOCK.LTS	PED WP	2	561566	561690	
C 148						
C 149	CONDENSER CPT-FAN MOTOR	ORDNANCE	3	562555	562001	
C 150						
C 151	EVAPORATOR CPT-THERMOSTAT	ITT SS	2	561813	562159	
C 152	CONDENSER CPT-FUEL GAUGE	PED WP	4	561610	561611	
C 153	EVAPORATOR CPT-AIR AMB. SENS	AMP MNL	2	561248	561247	
C 154	EVAPORATOR CPT-FRESH AIR SENS	ITT SS	2	561813	561812	
C 155	EVAPORATOR CPT-WATER VALVE	PED WP	4	561610	561611	
C 156	EVAPOR. CPT-BYPASS WATER VAL.	PED WP	2	561566	561690	
C 157	EVAPORATOR CPT-WATER PUMP	PED WP	2	561566	561690	
C 158	CONDENSER CPT-A/C LO TEMP.	PED WP	2	561566	561690	
C 159	CONDENSER CPT-A/C HI TEMP.	PED WP	2	561566	561690	
C 160	FR AXLE-ABS RH SENSOR	WABCO	2	641132	------	
C 161	FR AXLE-ABS RH VALVE	WABCO	3	------	641098	
C 162	FR AXLE-ABS LH VALVE	WABCO	3	------	641098	
C 163	FR AXLE-ABS LH SENSOR	WABCO	2	641132	------	
C 164	RR AXLE-ABS LH SENSOR	DEUTSCH	2	562486	562485	
C 165	RR AXLE-ABS LH VALVE	WABCO	3	------	641098	
C 166	RR AXLE-ABS RH VALVE	WABCO	3	------	641098	
C 167	RR AXLE-ABS RH SENSOR	DEUTSCH	2	562486	562485	
C 168	RR AXLE-ABS OPT ATC	PED WP	2	561566	561690	
C 169	RR JCT BOX-SPEED SW	AMP HDP	15	------	562012	
C 170	FR JCT BOX-FLASHER UNIT	TC	2	------	561940	
C 171	LH CONSOLE	AMP CPC	24			X
C 172	ENGINE COMPT-WATER TANK HEAT.	PED WP	2	561566	561690	
C 173	LAV.POTABLE-WATER TANK HEAT.	AMP MNL	2	560900	560898	
C 174	UNDER DASH RH-HTR MODULE	AMP MNL	9	561670	561669	
C 175	UNDER DASH RH-HTR MODULE	AMP MNL	9	561670	561669	
C 176	UNDER DASH RH-WIPER PULSE	AMP FF	6	------	561186	
C 177	UNDER DASH RH-WIPER MOTOR	AMP FF	6	------	561186	
C 178	UNDER DASH RH-LH FAN	TC	2	561030	560997	
C 179	UNDER DASH RH-RH FAN	TC	2	561030	560997	
C 180	RR JCT BOX-DIODE CONNECTOR	AMP MNL	15	561987	561986	
C 181	RR JCT BOX-DIODE CONNECTOR	AMP MNL	15	561987	561986	
C 182						
C 183	FR SERVICE CPT-KNEELING PAN.	PED WP	4	561610	561611	
C 184	FR SERVICE CPT-KNEELING SW	ITT SS	3	561111	561080	

NO	LOCATION	TYPE	CAVITY	#PIN HOUSING	#SOCKET HOUSING
C 185					
C 186	RR JCT BOX CPT.-SPEED SIGN.TR	PED WP	2	561566	561690
C 186M	RR JCT BOX CPT.-SPD SIGN. M.TR	PED WP	2	561566	561690
C 186W	RR JCT BOX CPT.-SPD SIGN. WT	PED WP	2	561566	561690
C 187	FR JCT BOX-RPM RESISTOR CON.	AMP MNL	6	561552	561515
C 188					
C 189	ENGINE CPT RR DOOR B/U LT	PED WP	2	561566	561690
C 190	ENGINE CPT RR DOOR TAIL LT	PED WP	2	561566	561690
C 191	ENGINE CPT RR DOOR RH STOP LT	PED WP	2	561566	561690
C 192	ENGINE CPT RR DOOR RH DIR. LT	PED WP	2	561566	561690
C 193					
C 194	ENGINE CPT RR DOOR LH DIR. LT	PED WP	2	561566	561690
C 195	ENGINE CPT RR DOOR LH STOP LT	PED WP	2	561566	561690
C 196	ENGINE CPT RR DOOR CYCLOP LT	PED WP	2	561566	561690
C 199	ENGINE CPT RR DOOR LICENCE LT	DOM AUTO	2	930210	------
C 200	RH HAT RACK-FLUORESCENT	AMP MNL	2	561248	561247
C 201	RH HAT RACK-FLUORESCENT	AMP MNL	2	561248	561247
C 202	RH HAT RACK-INDIRECT LIGHTING	MOLEX	2	--------	562758
C 203	RH HAT RACK-INDIRECT LIGHTING	MOLEX	6	--------	562759
C 204	RH HAT RACK-GENERAL LT	AMP MNL	2	560900	560898
C 205	FR SECT.-RH HAT RACK SPEAKER	AMP MNL	9	561661	561662
C 206	RH HAT RACK-READING LT	AMP FF	4	----------	562756
C 207	LH HAT RACK-READING LT	AMP FF	4	----------	562756
C 208	LH HAT RACK-BALLAST	MOLEX	2	----------	562758
C 209					
C 210	FR SECT.-LH HAT RACK SPEAKER	AMP MNL	9	561661	561662
C 211	FR ROOF-STORE LH	AMP MNL	2	560900	560898
C 212	FR ROOF-STORE RH	AMP MNL	2	560900	560898
C 213	FR ROOF-CLEARANCE LT	AMP MNL	2	560900	560898
C 214					
C 215					
C 216					
C 217					
C 218					
C 219					
C 220	RR.JCT.BOX-FUEL PRIME PUMP	TC	1	561070	561073
C 221					
C 222					
C 223					
C 224					
C 225					
C 226					
C 227					
C 228					
C 229					
C 230	ENG.CPT.-FUEL PRIME PUMP FEED	DEUTSCH	2	562486	562485
C 231	ENG.CPT.-FUEL PRIME PUMP SW.	PED WP	2	561566	561690
C 232	ENG.CPT.-FUEL PRIME PUMP	PED WP	2	561566	561690
C 233					
C 234					
C 235					
C 236					
C 237	UNDER DASH LH-JACOB CLUTCH SW	ITT SS	3	561111	561080
C 238	RR JCT BOX-DIODE CONNECTOR	AMP MNL	9	561670	561669
C 239	FR SERVICE CPT-HI BUOY VALVE	PED WP	2	561566	561690
C 240	FR SERVICE CPT-KNEEL PROX SW	PED WP	2	561566	561690
C 241					
C 242	FR SERVICE CPT-MARK & DIR LT	ITT SS	3	561111	561080
C 243	FR SERVICE CPT-HEADLAMPS	TC	3	------	561071
C 244	FR SERVICE CPT-LH FOG LAMP	ITT SS	2	561813	561812
C 245	FR SERVICE CPT-RH FOG LAMP	ITT SS	2	561813	561812
C 246	FR SERVICE CPT-MARK & DIR LT	ITT SS	3	561111	561080
C 247					
C 248	FR JCT BOX-WIPER PULSE GEN	AMP FF	6	------	561108

CONNECTORS CODE

NO	LOCATION	TYPE	CAVITY	#PIN HOUSING	#SOCKET HOUSING
C 249					
C 250					
C 251	LH SW PANEL-FAST IDLE	SWF	8	------	561107
C 252	LH SW PANEL-SWITCH LT	SWF	2	------	561837
C 253	LH SW PANEL-ETHER	SWF	8	------	561107
C 254	INST. PANEL RH-ENTR.DOOR SW.	TORRIX	5	------	562110
C 255	LH SW PANEL-JACOB	SWF	8	------	561107
C 256					
C 257					
C 258	LH SW PANEL-MULTI FUNC. SW	AMP FF	8	561188	------
C 259	LH SW PANEL-MULTI FUNC. SW	AMP FF	6	------	561108
C 260	FR SERVICE CPT-LUG DOOR LCK	PED WP	6	561606	561607
C 261	UNDER DASH RH-DOOR MODULE	AMP MNL	9	561670	561669
C 262	UNDER DASH RH-DOOR MODULE	AMP MNL	4	561551	561668
C 263	UNDER DASH RH-DOOR MODULE	AMP MNL	3	561667	561550
C 264	UNDER DASH RH-DOOR MODULE	AMP MNL	3	561667	561550
C 265	UNDER DASH RH-DOOR MODULE	AMP HDP-20	15	562011	562012
C 266					
C 267	UNDER DASH RH	AMP CPC	24	561642	561643
C 268	UNDER DASH LH-MIRROR	AMP MNL	6	561552	561515
C 269	UNDER DASH RH-MIRROR	AMP MNL	6	561552	561515
C 270	LH MIRROR POST	MOLEX	6	562070	562069
C 271	RH MIRROR POST	MOLEX	6	562070	562069
C 272	LH MIRROR	SPARTAN	6	------	990158
C 273	RH MIRROR	SPARTAN	6	------	990158
C 274					
C 275	UNDER DASH RH-DOOR MODULE	AMP MNL	9	561670	561669
C 276	UNDER DASH RH-LOCK SOL.VALVE	AMP MNL	2	561248	561247
C 277					
C 278					
C 279	UNDER DASH CYLINDER READ SW.	AMP MNL	2	561248	561247
C 280	LH CONSOLE-UNLOAD TAG SW.	NGR	10	------	562763
C 281					
C 282					
C 283					
C 284					
C 285					
C 286	RH SW PANEL-A/C & HEAT	SWF	8	------	561107
C 287	ENGINE COMPT-LTS SW	PED WP	2	561566	561690
C 288	RH SW PANEL-FRESH AIR	SWF	8	------	561107
C 289	RH SW PANEL-SWITCH LT	SWF	2	------	561837
C 290					
C 291					
C 292					
C 293					
C 294					
C 295					
C 296					
C 297	INSTRUMENT PANEL RH -LTS	AMP MNL	2	560900	560898
C 298					
C 299	LH CONSOLE SW-GALLEY	SWF	8	------	561107
C 300					
C 301					
C 302					
C 303					
C 304					
C 305					
C 306					
C 307					
C 308	LH CONSOLE SW-RHEOSTAT	TC	2	561030	560997
C 309	DDEC ENGINE-ECM POWER CON.	PED MP	5	------	562345
C 310	LH CONSOLE SW-LUG. DOOR LCK	SWF	8	------	561107
C 311	LH CONSOLE SW-HOS & PAS CHIME	SWF	8	------	561107
C 312	LH CONSOLE SW-READING LTS	SWF	8	------	561107

NO	LOCATION	TYPE	CAVITY	#PIN HOUSING	#SOCKET HOUSING	
C 313	LH CONSOLE SW-GEN & FLUOR LTS	SWF	8	------	561107	
C 314	LH CONSOLE SW-FR DEST. SIGN	SWF	8	------	561107	
C 315	LH CONSOLE SW-LH STORE	SWF	8	------	561107	
C 316	LH CONSOLE SPARE SWITCH	SWF	8	------	561107	
C 317	LH CONSOLE SW-RH STORE	SWF	8	------	561107	
C 318	LH CONSOLE SW-DRV WINDOW LIFT	SWF	8	------	561107	
C 319						
C 320	LH CONSOLE SW-DRIVER'S LTS	SWF	8	------	561107	
C 321						
C 322	LH CONSOLE DRV WIND LIFT MOT	PED PO	2	------	561848	
C 323	LH CONSOLE CRUISE CTR SW PAN. AMP	CPC	9	561636	561637	
C 324						
C 325	LH CONSOLE SW-KNEELING	SWF	8	------	561107	
C 326	LH CONSOLE SW-SPARE	SWF	8	------	561107	
C 327	ENGINE CONTROL	DEUTSCH	6	562583	562581	
C 328	GALLEY-LAMP	AMP MNL	2	561248	561247	
C 329	ENGINE TACHO SIGNAL	PED WP	3	561781	561789	
C 330	GALLEY MICROWAVE SW LT	SWF	2	------	561837	
C 331	GALLEY MICROWAVE SW	SWF	8	------	561107	
C 332	GALLEY RH CONTAINER SW LT	SWF	2	------	561837	
C 333	GALLEY RH CONTAINER SW	SWF	8	------	561107	
C 334	GALLEY LH CONTAINER SW	SWF	8	------	561107	
C 335	GALLEY LH CONTAINER SW LT	SWF	2	------	561837	
C 336						
C 337	INSTR PANEL LH-UP WIPER SW	SWF	8	------	561107	
C 338	INSTR PANEL LH-UP DEFROST SW	SWF	8	------	561107	
C 339	INSTR PANEL LH-UP WASHER SW	SWF	8	------	561107	
C 340	FR JCT. BOX FIRE PIEZO ALARM	AMP MNL	2	560900	560898	
C 341	INSTR PANEL LH-HEAT MIRROR SW	SWF	8	------	561107	
C 342	ENGINE RR START SW	DEUTSCH	2	562586	562585	
C 343	INSTR PANEL LH-HEADLAMP SW	SWF	8	------	561107	
C 344	INSTR PANEL LH-HAZARD LT SW	SWF	8	------	561107	
C 345	INSTR PANEL LH-FOG LT SW	SWF	8	------	561107	
C 346	INSTR PANEL LH-SWITCH LTS	SWF	2	------	561837	
C 347	INSTR PANEL LH-DASH LT SW	AMP MNL	2	560900	560898	
C 348	INSTR PANEL CENT-RACOR MODULE	MOLEX	6	562070	562067	
C 349						
C 350	RH CONSOLE-THERMOMETER	AMP MNL	3	561667	561550	
C 351	LH HAT RACK-FLUOR 110V	MOLEX	4	561477	561476	
C 352	RH CONSOLE-DRV TEMP SENSOR	BURNDY	4	------	561104	
C 353	INSTR PANEL RH-DRV FAN RHEOST	AMP MNL	6	561552	561515	
C 354	INSTR PANEL RH-DRV TEMP CTR	AMP MNL	6	561552	561515	
C 355	INSTR PANEL RH-FR TEMP CTR	AMP MNL	3	561667	561550	
C 356						
C 357	INSTR PANEL RH-WATER TEMP GA	AMP MNL	3	561667	561550	
C 358	INSTR PANEL RH-FUEL LEVEL GA	AMP MNL	3	561667	561550	
C 359						
C 360						
C 361	FR ROOF-WIPER MOTOR	AMP FF	6	------	561186	
C 362	FR ROOF-LAVATORY OCCUPIED LT	AMP MNL	2	561248	561247	
C 363	FR ROOF-WATCH YOUR STEP LT	AMP MNL	2	561248	561247	
C 364	FR ROOF-DESTINATION SIGN	AMP MNL	3	561667	561550	
C 365	FR ROOF-UP WINDSHIELD DEFROST	AMP MNL	3	561667	561550	
C 366	RH DASH PANEL-GRN & RED LEDS	AMP MNL	3	560908	562006	
C 367	ENGINE COMPT-DIF OIL T SENSOR	PED WP	2	561566	561690	
C 368	FR ROOF-DEST. SIGN BALLAST	AMP MNL	3	561667	561550	
C 369	FR ROOF-DEST. SIGN OPER. SW	TORRIX	5	------	562110	
C 370	FR ROOF-DEST. SIGN FLUOR.	AMP MNL	2	560900	560898	
C 371	FR ROOF-DEST. SIGN FLUOR.	AMP MNL	2	560900	560898	
C 372	FR ROOF-DEST. SIGN SPEED SW	MOLEX	4	561477	561476	
C 373	FR ROOF-NO SMOKING LT	AMP MNL	2	561248	561247	
C 374	LH SWITCH PANEL	AMP MNL	6	561552	561515	
C 375	JUMPER CONNECTOR	DEUTSCH	2			X
C 376						

CONNECTORS CODE

NO	LOCATION	TYPE	CAVITY	#PIN HOUSING	#SOCKET HOUSING
C 377	LH SW PANEL-STOP ENG.OVERIDE	SWF	8	------	561107
C 378					
C 379					
C 380	LH CONSOLE-DDR CONNECTOR	DEUTSCH	6	562360	------
C 381					
C 382					
C 383					
C 384					
C 385					
C 386	LH CONSOLE-WCL POWER SYSTEM	SWF	8	------	561107
C 387	RR JCT BOX (WCL)	AMP MNL	9	561661	561662
C 388	RR JCT BOX (WCL)	AMP MNL	12	561735	561734
C 389	WCL REAR DOOR	MOLEX	4	561477	561476
C 390	LAVATORY WALL-WCL REMOTE CTR	SWF	8	------	561107
C 391	LAVATORY WALL-WCL LAMP	SWF	8	------	561107
C 392	LAVATORY WALL-WCL SW. LT.	SWF	2	------	561835
C 393	LAVATORY WALL-WCL REMOTE SYS.	AMP CPC	4	561686	561687
C 394	UNDER INSTR. PANEL- B/U MONITOR	AMP MNL	4	560851	560852
C 395	DRIVER'S COMPT. - B/U MONITOR	AMP	5	------	------
C 396	FR SECT. LH HAT RACK-SPEAKER	MOLEX	4	562507	562503
C 397	ENGINE COMPT. CRADLE ACC.	DEUTSCH	40	562281	562284
C 398					
C 399					
C 400	ENGINE COMPT. BLOCK HEATER	PED MP	3	561781	561782
C 401					
C 402	RR DRIVE AXLE-AIR DRYER	PED MP	2	------	562251
C 403	GALLEY FRIGO NORCOLD	AMP MNL	2	561248	561247
C 404	GALLEY LAMP	AMP MNL	2	561248	561247
C 405					
C 406	FR JCT BOX COMPT.-ABS	AMP MNL	2	560900	560898
C 407	ENGINE COMPT. -SIGNAL	PED WP	6	561606	561607
C 408	ENGINE COMPT. -SIGNAL	PED WP	6	561606	561607
C 409	ENGINE CPT -LOW COOL. LEVEL	PED MP	2	------	562350
C 410	FR JCT BOX-DIODE CONNECTOR	AMP MNL	15	561987	561986
C 411	FR JCT BOX-DIODE CONNECTOR	AMP MNL	15	561987	561986
C 412	LH SW PANEL-MASTER SWITCH	SWF	8	------	561107
C 413	ENG CPT-A/C HI UNLOAD PRS SW	PED WP	2	561566	561690
C 414	RR JCT BOX	AMP MNL	9	561670	561669
C 415	ENGINE CRADLE-FAN SIGNAL	PED WP	3	561781	561782
C 416	ENGINE CRADLE-FAN SIGNAL	PED P-C	3	562237	------
C 417	FRONT JCT BOX-DIODES	AMP MNL	15	561987	561986
C 418	INSTR. PANEL LH-HTR WINDSH.SW	SWF	8	------	561107
C 419	FR JCT BOX-RETARDER OR JACOB	AMP MNL	3	561667	561550
C 420	ENGINE COMPT. WEBASTO WATER HTR	TC	2	561597	------
C 421	ENGINE COMPT. WEBASTO WATER HTR	TC	1	561073	------
C 422	ENGINE COMPT. WEBASTO WATER HTR	TC	2	561597	------
C 423					
C 424	UNDER INSTRUMENT PANEL CENTER	AMP MNL	3	561667	561550
C 425	FR JCT BOX-DIODES	AMP MNL	15	561987	561986
C 426	ENGINE COMPT. CLUTCH CTR FAN	PED WP	3	561781	561782
C 427					
C 428					
C 429	FR JCT BOX COMPT.	AMP MNL	6	561552	561515
C 430	LH CONSOLE-TIMER	AMP FF	8	561188	562363
C 431	LH CONSOLE-PRE HEAT.	TAB AMP	1	561540	561539
C 432	ENGINE CPT.-PROX. SW. DOOR AJAR	DEUTSCH	4	562479	562477
C 433	FR SERVICE CPT. KNEEL. PRESS. SW	PED WP	2	561566	561690
C 434	FRONT JCT. BOX-DIODES	AMP MNL	15	561987	561986
C 435	FR SERVICE CPT.(RH) KNEEL. PIEZO	AMP MNL	2	560900	560898
C 436	RH HAT RACK-WCL CENTER ROOF ACC	AMP CPC	16	561639	561640
C 437	RH HAT RACK-WCL FR & RR SECT.	AMP CPC	24	561642	561643
C 438					
C 439					
C 440					

NO	LOCATION	TYPE	CAVITY	#PIN HOUSING	#SOCKET HOUSING	
C 441						
C 442						
C 443						
C 444						
C 445						
C 446						
C 447						
C 448						
C 449						
C 450	SOUND SYS. JCT. PANEL	MOLEX	4	562507	562503	
C 451	WIRELESS MICRO-FIRST CPT BAG	MOLEX	2	562550	562549	
C 452	UNDER DASH INSTR. PANEL	MOLEX	2	562550	562549	
C 453	SOUND SYS. JCT.PANEL-VCP	PED WP	2	561566	561680	
C 454	SOUND SYS.JCT.PAN.-FILT. VCP	PED WP	2	561566	561680	
C 455	WIRELESS MICRO-LH HAT-RACK	CINCH	2	562554	562551	
C 456	WORLD TRANSM.-RETARDER ACCUM.	PED MP	2	------	562427	
C 457	WORLD TRANSM.-MAIN CONNECTOR	DEUTSCH	31	562572	562536	
C 458	WORLD TRANSM.-TURBINE SP.SENS	PED MP	2	------	562426	
C 459	WORLD TRANSM.-ENGINE SP.SENS.	PED MP	2	------	562426	
C 460	WORLD TRANSM.-SPEED SENSOR	ITT	2	------	562541	
C 461	WORLD TRANSM.-RETARDER TEMP.	PED MP	2	561566	561680	
C 462	WORLD TRANSM.-RETARD SOL."K"	PED MP	2	------	562426	
C 463	WORLD TRANSM.-SENSOR CONN.	DEUTSCH	16	562570	562571	
C 464	RR JCT BOX-DDR CONN W.T.	DEUTSCH	12	------	562574	X
C 465	LH CONSOLE-SHIFTER SELECTOR	T & BET	10	------	562429	X
C 466	FR SERVICE CPT.-RESIS. MOD.	PED WP	3	------	562428	
C 467	FR SERVICE CPT.-RESIS. MOD.	PED WP	3	------	562428	
C 468			8			
C 469						
C 470	FR LH UPPER WHELL CPT-SILENT 1000	AMP MNL	2	561248	561247	
C 471	FR LH UPPER WHELL CPT-SILENT 1000	AMP MNL	2	561248	561247	
C 472	FR LH UPPER WHELL CPT-SILENT 1000	PED WP	2	561566	561690	
C 473	FR LH UPPER WHELL CPT-SILENT 1000	AMP MNL	3	561667	561550	
C 474	DRIVER CPT.-TEMP. SENSOR	AMP MNL	2	561247	561248	
C 475	RR JCT BOX-SPEED SIGN CONNECTOR	AMP MNL	2	561248	561247	
C 475M	RR JCT BOX-SPEED SIGN MANUAL TR.	MOLEX	6	562070	562069	
C 475W	RR JCT BOX-SPEED SIGN WORLD TR.	MOLEX	6	562070	562069	
C 476						
C 477						X
C 478	ELECTRONIC DESTINATION SIGN	AMP CPC	9	561636	561637	
C 479	HVAC MODULE					X
C 480						X
C 481						X
C 482						X
C 483	FR SERVICE CPT. (NOT USED)	PED PC	2	------	562237	X
C 384						X
C 385						X
C 386						
C 387						
C 388						
C 389						
C 390						
C 391						
C 392						
C 393						
C 394						
C 395						
C 396						
C 397						
C 398						
C 399						
C 500	FR LH UPPER WHELL CPT -PRODRIVER	MOLEX	6	562070	562069	
C 501	FR LH UPPER WHELL CPT -PRODRIVER MOD	PED MP	7	562433	------	

CONNECTORS CODE

NO	LOCATION	TYPE	CAVITY	#PIN HOUSING	#SOCKET HOUSING	
C 502	LH CONSOLE-PRE HEATER SW.	SWF	8	------	561107	
C 503	LH CONSOLE-PRE HEATER SW.	SWF	2	------	561837	
C 504	LH CONSOLE WEBASTO TIMER	AMP	8	561188	562363	
C 505	LH CONSOLE ESPAR TIMER	AMP	9	------	562681	
C 506	FR JCT BOX CPT. DIGITAL CLOCK	AMP	4	561685	561687	
C 507	FR SECT. LH HAT-RACK DIG. CLOCK	MOLEX	4	561477	561476	
C 508	RR JCT BOX-FAN CLUTCH RETARDER	AMP MNL	6	561552	561515	
C 509	FR LH UPPER WHELL CPT -DATA LOGGER	PED MP	16	------	562530	
C 510	FR LH UPPER WHELL CPT -DATA LOGGER	DEUTSCH	9	562531	------	
C 511	FR LH UPPER WHELL CPT -DATA LOGGER	PED MP	4	562532	------	
C 512	FR LH UPPER WHELL CPT -DATA LOGGER	PED MP	10	562533	------	
C 513	FR LH UPPER WHELL CPT -DATA LOGGER	AMP MNL	3	561667	561550	
C 514	FR LH UPPER WHELL CPT -DATA LOGGER	PED MP	6	562433	562417	
C 515	FR JCT BOX CPT.-INTERCOM	MOLEX	4	561477	561476	
C 516	FR JCT BOX CPT.-INTERCOM	MOLEX	6	562070	562069	
C 517	LAVATORY WALL-INTERCOM	MOLEX	6	562070	562069	
C 519	UNDER DASH RH-SEDAN DOOR	HUMPHREY	2	------	562580	
C 520	UNDER DASH RH-SEDAN DOOR	HUMPHREY	2	------	641385	
C 521	UNDER DASH RH-SEDAN DOOR	HUMPHREY	2	------	641385	
C 522	FR JCT BOX-DAYTIME LTS MODULE	BOSCH	5	------	561183	
C 523	FR JCT BOX-FUSE BLOCK	PED	8	562647	562646	
C 524	FR JCT BOX-FUSE BLOCK	PED	8	562647	562646	
C 525	FR JCT BOX-FUSE BLOCK	PED	8	562647	562646	
C 526	FR JCT BOX-FUSE BLOCK	PED	8	562647	562646	
C 527	FR JCT BOX-FUSE BLOCK	PED	8	562647	562646	
C 528	FR JCT BOX-FUSE BLOCK	PED	8	562647	562646	
C 529	FR JCT BOX-12V OUTLET	AMP MNL	2	561247	561248	
C 530	RR JCT BOX-FUSE BLOCK	PED	8	562647	562646	
C 531	RR JCT BOX-FUSE BLOCK	PED	8	562647	562646	
C 532	RR JCT BOX-FUSE BLOCK	PED	8	562647	562646	
C 533	RR JCT BOX-FUSE BLOCK	PED	8	562647	562646	
C 534	RR JCT BOX-FUSE BLOCK	PED	8	562647	562646	
C 535	RR JCT BOX-FIRE MODULE DETECT.	AMP MNL	3	561667	561550	
C 536	UNDER DASH RH-DRIVER'S HTR TEMP. CTR	AMP MNL	6	561552	561515	
C 537	BATT. CPT.-A/C PRESS. SIGN. RLY	AMP MNL	2	561248	561247	
C 538	FR SERVICE CPT.-OUTSIDE TEMP. SENSOR	AMP MNL	2	561248	561247	
C 539	HVAC DASH MODULE OUTPUT CON	MOLEX	24			X
C 540	HVAC DASH MODULE INPUT CON	MOLEX	22			X
C 541	SOUND SYS. JCT PANEL-AUDIO SEAT SYS.	PED WP	2	561566	561690	
C 542	LH HAT RACK-AUDIO SEAT SYSTEM	AMP MNL	3	561667	561550	
C 543	RR JCT BOX-PARK. BRAKE STOP LTS RESIS.	PED WP	2	561566	561690	
C 544	SOUND SYS JCT PANEL-AUDIO SEAT SYS.	PED WP	3	561781	562428	
C 545	LH HAT RACK-AUDIO SEAT SYSTEM	AMP MNL	3	561667	561550	
C 546						
C 547	RH DASH PANEL-ACCESSORIES	AMP CPC	37	561645	561646	
C 548	LH DASH PANEL-T.T. LT. TEST SW.	SWF	8	------	561107	
C 549	LH CONSOLE-FAN CLUTCH OVERRIDE SW.	SWF	8	------	561107	
C 550	LAST LUGG. CPT. -WCL RICON	AMP CPC	16	561694	561695	
C 551	LAST LUGG. CPT. -WCL RICON	AMP CPC	16	561694	561695	
C 552	LAST LUGG. CPT. -WCL RICON	AMP CPC	9	561636	561637	
C 553	UNDER DASH R.H. - CONTROL. HEAD	MOLEX	16	--------	562559	
C 554	UNDER DASH R.H. - CONTROL. HEAD	MOLEX	16	--------	562559	
C 555	UNDER DASH R.H. - CONTROL. HEAD	MOLEX	16	--------	562559	
C 556	UNDER DASH R.H. - RADIO ACC.	MOLEX	2	562550	562549	
C 557	UNDER DASH R.H. - RADIO ACC.	MOLEX	9	562556	562555	
C 558	UNDER DASH R.H. - RADIO ACC.	MOLEX	4	562507	562503	
C 559	L.H. HAT RACK - PASSENGER SPK.	MOLEX	4	562507	562503	
C 560	SOUND SYS. JCT. PANEL - POWER AMPLI	MOLEX	4	562507	562503	
C 561	L.H. HAT RACK - WIRELESS MICRO	MOLEX	4	562507	562503	
C 562	L.H. HAT RACK - VCP	MOLEX	9	562556	562555	
C 563	L.H MODESTY PANEL - DRIVERS SPK.	MOLEX	4	562507	562503	
C 564	L.H MODESTY PANEL - MICRO	MOLEX	4	562507	562503	
C 565	R.H MODESTY PANEL - MICRO	MOLEX	4	562507	562503	
C 566	L.H. CONSOLE - BOOM MICRO	MOLEX	4	562507	562503	
C 567	L.H. CONSOLE - DRIVERS MICRO	MOLEX	4	562507	562503	

NO	LOCATION	TYPE	CAVITY	#PIN HOUSING	#SOCKET HOUSING	
C 568	SOUND SYS. JCT. PANEL - PASS. SPK	CINCH	4	562553	562552	
C 569	SOUND SYS. JCT. PANEL - POWER AMPLI.	MOLEX	9	562556	562555	
C 570	UNDER DASH PANEL TTLT	MOLEX	6	56	562464	X
C 571	UNDER DASH PANEL TTLT	MOLEX	20	56	56	X
C 572	UNDER DASH PANEL TTLT	MOLEX	18	56	56	X
C 573	UNDER DASH PANEL TTLT	MOLEX	16	56	562465	X
C 574	HAT -RACK FLUOR. INDIRECT LIGHTING	MOLEX	6	----------	562759	
C 575						
C 576						
C 577						
C 578						
C 579						
C 580						
C 581						
C 582	FRONT SERVICE CMPT. - WINDOWS AJAR	PED WP	2	561566	561690	
C 583	L.H. DASH PANEL - MASTER KEY	DEUTSCH	2	562486	562485	
C 584	FRONT SERVICE CMPT. - AIR HORH	HUMPHREY	3	--------	641385	
C 585						
C 586	L.H. DASH PANEL - DISPLAY SET SW.					X
C 587						X
C 588	FRONT SERVICE CMPT. CENTER	AMP. CPC	37	561645	561646	
C 589	UNDER DASH - L.H. MIRROR	AMP MNL	9	561670	561669	
C 590	UNDER DASH - R.H. MIRROR	AMP MNL	9	561670	561669	
C 591	L.H.CONSOLE - MIRROR L.H.	EURAMTEC	8	--------	562799	
C 592	L.H.CONSOLE - MIRROR R.H.	EURAMTEC	8	--------	562799	
C 593	BATTERY CMPT. - CHARGER	PED WP	3	561781	561782	
C 594	FRONT ROOF - DRIVERS LIGHT	LEEKRAFT		---------	562803	X
C 595	DASH CENTER MODULE - OPEN DOOR	MOLEX	4	561477	561476	
C 596	DASH CENTER MODULE - CLOSE DOOR	MOLEX	4	561477	561476	
C 597	DASH CENTER MODULE - OPEN DOOR	MOLEX	4	561477	561476	
C 598	DASH CENTER MODULE - OPEN DOOR	MOLEX	4	561477	561476	
C 599	DASH CENTER MODULE - OPEN DOOR	MOLEX	4	561477	561476	
C 600	ENGINE CMPT.-A/C LOW PRESS SW. UNLOAD	PED	2	562348	562471	
C 601	L.H. ROOF - WINDOW AJAR	AMP MNL	2	561248	561247	
C 602	L.H. ROOF - WINDOW AJAR	MOLEX	4	561477	561476	
C 603	R.H. ROOF - WINDOW AJAR	AMP MNL	2	561248	561247	
C 604						
C 605	HAT RACK - MOTOR FAN	PED	2	560997	561030	
C 606						
C 607	FRONT SERVICE CMPT. RPM SIGNAL	PED WP	2	561566	561690	
C 608	FRONT SERVICE CMPT. SPEED SIGNAL	PED WP	2	561566	561690	
C 609	LAVATORY - NIGHT LIGHT					X
C 610	RR JCT BOX	CPC	6	561552	561515	
C 611						
C 612						
C 613						
C 614						
C 615						
C 616						
C 617						
C 618						
C 619						

CONNECTORS CODE

NO	LOCATION	TYPE	CAVITY	#PIN HOUSING	#SOCKET HOUSING
C X1	FR LH UPPER WHELL CPT-ABS	WABCO	18		562792
C X2	FR LH UPPER WHELL CPT-ABS	WABCO	6		562793
C X3	FR LH UPPER WHELL CPT-ABS	WABCO	9		562794
C X4	FR LH UPPER WHELL CPT-ABS	WABCO	15		562795`
C S	RR JCT BOX ECU WORLD TR.	PED	32		562817
C T	RR JCT BOX ECU WORLD TR.	PED	32		562824
C V	RR JCT BOX ECU WORLD TR.	PED	32		562823
CV I2	RR JCT BOX-WORLD TRANS. SHIFT & RET.	AMP CPC	9	561636	561637
C Y	CLUSTER	JAE	30		562765
C 1	FR JCT BOX COMPARTMENT	AMP CPC	14	561585	561584
C 2	FR JCT BOX COMPARTMENT	AMP CPC	16	561639	561640
C 3	FR JCT BOX COMPARTMENT	AMP CPC	24	561641	561643
C 4	FR JCT BOX COMPARTMENT	AMP CPC	37	561644	561646
C 5	FR SERVICE COMPT.-UNDERNEATH	AMP CPC	37	561644	561646
C 6	FR SERVICE COMPT.-UNDERNEATH	AMP CPC	16	561639	561640
C 7					
C 8	FR SERVICE COMPT.-UNDERNEATH	AMP CPC	24	561641	561643
C 9	FR SERVICE COMPT.-UNDERNEATH	AMP CPC	24	561641	561643
C 10					
C 11	FR SERVICE COMPARTMENT	AMP CPC	37	561644	561646
C 12	FR SERVICE COMPARTMENT	AMP CPC	16	561639	561640
C 13	LH CONSOLE-CTR MIRROR	AMP MNL	6	561552	561515
C 14	UNDER DASH-LH MIRROR	AMP MNL	9	561661	561662
C 15	RR JCT BOX	AMP CPC	24	561641	561643
C 16	LH CONSOLE SW-CRUISE ON OFF	EATON	10	------	562763
C 17	LH CONSOLE SW-CRUISE RESUME	EATON	10	------	562763
C 18	LH CONSOLE SW-CRUISE SET	EATON	10	------	562763
C 19	LH CONSOLE DECEL SW	EATON	10	------	562763
C 20	RR JCT BOX	AMP CPC	37	561644	561646
C 21	RR JCT BOX	AMP CPC	24	561641	561643
C 22					
C 23					
C 24					
C 25					
C 26	HYD & MAN TRANSM.-NEUT.& B/U	PED WP	4	561610	561611
C 27	HYD & MAN TRANSM.-SPEED SENS.	PED WP	2	561566	561690
C 28					
C 29					
C 30					
C 31					
C 32	DDEC ENGINE-ECM	PED	30	------	561600
C 33					
C 34					
C 35	RR JCT BOX	AMP CPC	24	561642	561643
C 36					
C 37	RR SECTION-LH HAT RACK	MOLEX	6	562507	562503
C 38	RR SECTION-RH HAT RACK	MOLEX	6	562507	562503
C 39					
C 40					
C 41	LAVATORY ROOF FLUORESCENT	AMP MNL	2	560900	560898
C 42	LAVATORY BACK WALL-WTR TANK	AMP MNL	2	560900	560898
C 43	LAVATORY BACK WALL-ACCES.	AMP MNL	9	561661	561662
C 44					
C 45	FR JCT BOX COMPARTMENT	AMP CPC	24	561642	561643
C 46					
C 47	FR SERVICE COMPARTMENT	AMP CPC	16	561694	561695
C 48					
C 49	BATTERIE COMPT.-LT	AMP MNL	2	561248	561247
C 50	FR SERVICE COMPT.-LOW BUOY	PED WP	1	561605	561577
C 51					
C 52	RR JCT BOX	AMP CPC	22	561709	561710
C 53					
C 54					
C 55	RH SWITCH PANEL	AMP CPC	9	561636	561637
C 56					

NO	LOCATION	TYPE	CAVITY	#PIN HOUSING	#SOCKET HOUSING
C 57					
C 58	RR JCT BOX AC PANEL	DEUTSCH	24	562280	562283
C 59	RR JCT BOX AC PANEL	AMP CPC	14	561584	561583
C 60	RR JCT BOX COMPT.-LT	AMP MNL	2	561248	561247
C 61	LUGGAGE COMPARTMENT LTS	AMP MNL	2	561248	561247
C 62	LUGGAGE COMPARTMENT LTS	AMP MNL	2	561248	561247
C 63	LUGGAGE COMPARTMENT LTS	AMP MNL	2	561248	561247
C 64	LUGGAGE COMPARTMENT LTS	AMP MNL	2	561248	561247
C 65	LUGGAGE COMPARTMENT LTS	AMP MNL	2	561248	561247
C 66	LUGGAGE COMPARTMENT LTS	AMP MNL	2	561248	561247
C 67	LUGGAGE COMPARTMENT LTS	AMP MNL	2	561248	561247
C 68	LUGGAGE COMPARTMENT LTS	AMP MNL	2	561248	561247
C 69	RR AXLE ACC-INSIDE PVC END	PED WP	6	561568	561578
C 70	LH CONSOLE	AMP CPC	16	561642	561643
C 71	FR JCT BOX COMPARTMENT	AMP CPC	37	561645	561646
C 72	FR JCT BOX COMPARTMENT	AMP CPC	24	561642	561643
C 73	DASH CENTER PANEL	AMP CPC	16	561639	561640
C 74	FR JCT BOX COMPARTMENT	AMP CPC	37	561645	561646
C 75					
C 76	LUGGAGE COMPT.-AIR RET.SENS.	AMP MNL	2	561248	561247
C 77	LUGGAGE COMPT.-AIR RET.SENS.	AMP MNL	2	561248	561247
C 78					
C 79					
C 80	LUGGAGE COMPT.-AIR RET.SENS.	AMP MNL	2	561248	561247
C 81	PASSENGER COMPT.-AISLE LTS	AMP MNL	2	560900	560898
C 82	ENTRANCE DOOR	MOLEX	6	562070	562069
C 83	ENTRANCE DOOR-PROIMITY SW	MOLEX	4	561477	561476
C 84	ENTRANCE DOOR-PRESSURE SW	PED WP	2	561566	561690
C 85	UNDER INSTRUMENT PANEL LH	AMP MTA-100 8	------	562248	------
C 86					
C 87	RR END ROOF	AMP CPC	9	561636	561637
C 88	RR END ROOF-CLEARANCE LTS	AMP MNL	2	560900	560898
C 89	RR END ROOF-B/U NONITOR	AMP CPC	4	561582	561581
C 90	RR JCT BOX	AMP CPC	15	561987	561986
C 91	RR JCT BOX	AMP CPC	37	561714	561713
C 92	FR LH UPPER WHELL CPT-ABS	AMP CPC	9	561635	561637
C 93	FR LH UPPER WHELL CPT-ABS		35	------	641094
C 94					
C 95					
C 96	FR AXLE ACCESSORIES	AMP CPC	14	561585	561585
C 97	RR AXLE ACC-INSIDE PVC END	PED WP	6	561568	561578
C 98	FR SERVICE COMPT-EL.FT.PEDAL	PED WP	3	561782	561781
C 99	FR SERVICE COMPT LTS	AMP MNL	2	561248	561247
C 100					
C 101	FR SERVICE COMPT-ELEC. HORNS	PED WP	2	561566	561690
C 102	FR SERV & SIDE CPT-FLASH. LH	GROTE	2	------	562155
C 103	FR SERV & SIDE CPT-MARKERS	GROTE	2	------	562155
C 104	FR SERV & SIDE CPT-FLASH. RH	GROTE	2	------	562155
C 105	FR SERVICE COMPT-LIQ.S.VALVE	PED WP	2	561566	561690
C 106	FR SERVICE COMPT-WATER VALVE	PED WP	2	561566	561690
C 107	EVAPORATOR COMPT-DAMPER	PED WP	2	561566	561690
C 108	FR SERVICE COMPT-KNEEL.SYS	PED WP	2	561566	561690
C 109	FR SERVICE COMPT-KNEEL.SYS	PED WP	2	561566	561690
C 110	FR SERVICE COMPT-KNEEL.SYS	PED WP	2	561566	561690
C 111	EVAPORATOR COMPT-DAMPER	DEUTSCH	2	562486	562485
C 112	EVAPORATOR COMPT-SPEED MOT CTRL	DEUTSCH	5	------	562566
C 113	BATT. & RR J.B.CPT.MARKER LT	GROTE	2	------	562155
C 114	RR J. BOX CPT DOOR DIR LT LH	GROTE	2	------	562155
C 115	ENGINE COMPT-AIR DRYER	PED WP	2	561566	561690
C 116	ENGINE COMPT. LTS	PED WP	1	561605	561577
C 117					
C 118	ENGINE COMPT-LAVATORY FAN	PED WP	2	561566	561690
C 119	ENGINE CPT RR DOOR RH LO LAMP	PED WP	6	561606	561607

CONNECTORS CODE

NO	LOCATION	TYPE	CAVITY	#PIN HOUSING	#SOCKET HOUSING
C 120	ENGINE CPT RR DOOR LH LO LAMP	PED WP	6	561606	561607
C 121	BATTERIE CPT. DOOR DIR LT RH	GROTE	2	------	562155
C 122	ENGINE CPT-UNLOAD TAG SYSTEM	PED WP	2	561566	561690
C 123	TAG AXLE-UNLOAD TAG RH VALVE	PED WP	2	561566	561690
C 124	ENGINE CPT-ETHER SW	PED WP	2	561566	561690
C 125	ENGINE CPT-B/U ALARM	PED WP	2	561566	561690
C 126	ENGINE CPT-FLUSHING PUMP	PED WP	2	561566	561690
C 127	ENGINE CPT-FUEL FILTER	PED WP	2	561566	561690
C 128	ENGINE CPT-A/C COMPR.CLUTCH	ITT SS	2	561813	561812
C 129	ENGINE CPT-PRE-HEAT WATER	AMP FF	6	561672	561186
C 130	ENGINE CPT-UNLOADER	ITT SS	2	561813	561812
C 131	ENGINE CPT-UNLOADER	ITT SS	2	561813	561812
C 132	ENGINE CPT-A/C LO PRESS SW	PED WP	2	561566	561690
C 133	ENGINE CPT-A/C HI PRESS SW	PED WP	2	561566	561690
C 134	FR JCT BOX-LUGGAGE DIODE CON.	AMP MNL	15	561987	561986
C 135	FR JCT BOX-LUGGAGE DIODE CON.	AMP MNL	15	561987	561986
C 136					
C 137	RR JCT BOX-TRANSMITTER	AMP MNL	2	560900	560898
C 138	RR JCT BOX-CONTROL MODULE	AMP HDP	15	------	562012
C 139	RR JCT BOX-LOGIC MODULE	AMP HDP	15	562011	------
C 140	HVAC DASH MODULE THERMOMETER	MOLEX	4		562782
C 141	INSTRUMENT PANEL LH UNLOAD TAG	AMP	2	561248	561247
C 142	LAVATORY DOOR WALL	AMP MNL	2	561248	561247
C 143	LAVATORY DOOR WALL	AMP MNL	3	560908	562006
C 144	UNDER LH SEAT-AISLE LTS	AMP MNL	4	560851	560852
C 145	RR JCT BOX CPT-RR SIDE LTS	AMP MNL	9	561670	561669
C 146	ENGINE CPT-MODULATOR VALVE	AMPHENOL	2	------	560412
C 147	BATT & RR J.B.CPT-DOCK.LTS	PED WP	2	561566	561690
C 148					
C 149	CONDENSER CPT-FAN MOTOR	ORDNANCE	3	562555	562001
C 150					
C 151	EVAPORATOR CPT-THERMOSTAT	ITT SS	2	561813	562159
C 152	CONDENSER CPT-FUEL GAUGE	PED WP	4	561610	561611
C 153	EVAPORATOR CPT-AIR AMB. SENS	AMP MNL	2	561248	561247
C 154	EVAPORATOR CPT-FRESH AIR SENS	ITT SS	2	561813	561812
C 155	EVAPORATOR CPT-WATER VALVE	PED WP	4	561610	561611
C 156	EVAPOR. CPT-BYPASS WATER VAL.	PED WP	2	561566	561690
C 157	EVAPORATOR CPT-WATER PUMP	PED WP	2	561566	561690
C 158	CONDENSER CPT-A/C LO TEMP.	PED WP	2	561566	561690
C 159	CONDENSER CPT-A/C HI TEMP.	PED WP	2	561566	561690
C 160	FR AXLE-ABS RH SENSOR	WABCO	2	641132	------
C 161	FR AXLE-ABS RH VALVE	WABCO	3	------	641098
C 162	FR AXLE-ABS LH VALVE	WABCO	3	------	641098
C 163	FR AXLE-ABS LH SENSOR	WABCO	2	641132	------
C 164	RR AXLE-ABS LH SENSOR	DEUTSCH	2	562486	562485
C 165	RR AXLE-ABS LH VALVE	WABCO	3	------	641098
C 166	RR AXLE-ABS RH VALVE	WABCO	3	------	641098
C 167	RR AXLE-ABS RH SENSOR	DEUTSCH	2	562486	562485
C 168	RR AXLE-ABS OPT ATC	PED WP	2	561566	561690
C 169	RR JCT BOX-SPEED SW	AMP HDP	15	------	562012
C 170	FR JCT BOX-FLASHER UNIT	TC	2	------	561940
C 171	LH CONSOLE	AMP CPC	24	561642	561643
C 172	ENGINE COMPT-WATER TANK HEAT.	PED WP	2	561566	561690
C 173	LAV.POTABLE-WATER TANK HEAT.	AMP MNL	2	560900	560898
C 174	UNDER DASH RH-HTR MODULE	AMP MNL	9	561670	561669
C 175	UNDER DASH RH-HTR MODULE	AMP MNL	9	561670	561669
C 176	UNDER DASH RH-WIPER PULSE	AMP FF	6	------	561186
C 177	UNDER DASH RH-WIPER MOTOR	AMP FF	6	------	561186
C 178	UNDER DASH RH-LH FAN	TC	2	561030	560997
C 179	UNDER DASH RH-RH FAN	TC	2	561030	560997
C 180	RR JCT BOX-DIODE CONNECTOR	AMP MNL	15	561987	561986
C 181	RR JCT BOX-DIODE CONNECTOR	AMP MNL	15	561987	561986
C 182					
C 183	FR SERVICE CPT-KNEELING PAN.	PED WP	4	561610	561611

NO	LOCATION	TYPE	CAVITY	#PIN HOUSING	#SOCKET HOUSING
C 184	FR SERVICE CPT-KNEELING SW	ITT SS	3	561111	561080
C 185					
C 186	RR JCT BOX CPT.-SPEED SIGN.TR	PED WP	2	561566	561690
C 186M	RR JCT BOX CPT.-SPD SIGN. M.TR	PED WP	2	561566	561690
C 186W	RR JCT BOX CPT.-SPD SIGN. WT	PED WP	2	561566	561690
C 187	FR JCT BOX-RPM RESISTOR CON.	AMP MNL	6	561552	561515
C 188					
C 189	ENGINE CPT RR DOOR B/U LT	PED WP	2	561566	561690
C 190	ENGINE CPT RR DOOR TAIL LT	PED WP	2	561566	561690
C 191	ENGINE CPT RR DOOR RH STOP LT	PED WP	2	561566	561690
C 192	ENGINE CPT RR DOOR RH DIR. LT	PED WP	2	561566	561690
C 193					
C 194	ENGINE CPT RR DOOR LH DIR. LT	PED WP	2	561566	561690
C 195	ENGINE CPT RR DOOR LH STOP LT	PED WP	2	561566	561690
C 196	ENGINE CPT RR DOOR CYCLOP LT	PED WP	2	561566	561690
C 199	ENGINE CPT RR DOOR LICENCE LT	DOM AUTO	2	930210	------
C 200	RH HAT RACK-FLUORESCENT	AMP MNL	2	561248	561247
C 201	RH HAT RACK-FLUORESCENT	AMP MNL	2	561248	561247
C 202	RH HAT RACK-INDIRECT LIGHTING	MOLEX	2	---------	562758
C 203	RH HAT RACK-INDIRECT LIGHTING	MOLEX	6	---------	562759
C 204	RH HAT RACK-GENERAL LT	AMP MNL	2	560900	560898
C 205	FR SECT.-RH HAT RACK SPEAKER	AMP MNL	9	561661	561662
C 206	RH HAT RACK-READING LT	AMP FF	4	----------	562756
C 207	LH HAT RACK-READING LT	AMP FF	4	----------	562756
C 208	LH HAT RACK-BALLAST	MOLEX	2	----------	562758
C 209	LH HAT RACK HOTESS CHIME	AMP MNL	3	561667	561550
C 210	FR SECT.-LH HAT RACK SPEAKER	AMP MNL	9	561661	561662
C 211	FR ROOF-STORE LH	AMP MNL	2	560900	560898
C 212	FR ROOF-STORE RH	AMP MNL	2	560900	560898
C 213	FR ROOF-CLEARANCE LT	AMP MNL	2	560900	560898
C 214					
C 215					
C 216					
C 217					
C 218					
C 219					
C 220	RR.JCT.BOX-FUEL PRIME PUMP	TC	1	561070	561073
C 221					
C 222					
C 223					
C 224					
C 225					
C 226					
C 227					
C 228					
C 229					
C 230	ENG.CPT.-FUEL PRIME PUMP FEED	DEUTSCH	2	562486	562485
C 231	ENG.CPT.-FUEL PRIME PUMP SW.	PED WP	2	561566	561690
C 232	ENG.CPT.-FUEL PRIME PUMP	PED WP	2	561566	561690
C 233	FR. SERVICE COMPT.	VDO	8		562043
C 234	FR. SERVICE COMPT.	VDO	8		562044
C 235	FR. SERVICE COMPT.	VDO	8		562041
C 236	LUGGAGE COMPARTEMENT	AMP MNL	4	560851	560852
C 237	UNDER DASH LH-JACOB CLUTCH SW	ITT SS	3	561111	561080
C 238	RR JCT BOX-DIODE CONNECTOR	AMP MNL	9	561670	561669
C 239	FR SERVICE CPT-HI BUOY VALVE	PED WP	2	561566	561690
C 240	FR SERVICE CPT-KNEEL PROX SW	PED WP	2	561566	561690
C 241					
C 242	FR SERVICE CPT-MARK & DIR LT	ITT SS	3	561111	561080
C 243	FR SERVICE CPT-HEADLAMPS	TC	3	------	561071
C 244	FR SERVICE CPT-LH FOG LAMP	ITT SS	2	561813	561812
C 245	FR SERVICE CPT-RH FOG LAMP	ITT SS	2	561813	561812
C 246	FR SERVICE CPT-MARK & DIR LT	ITT SS	3	561111	561080
C 247					

CONNECTORS CODE

NO	LOCATION	TYPE	CAVITY	#PIN HOUSING	#SOCKET HOUSING
C 248	FR JCT BOX-WIPER PULSE GEN	AMP FF	6	------	561108
C 249					
C 250					
C 251	LH SW PANEL-FAST IDLE	SWF	8	------	561107
C 252	LH SW PANEL-SWITCH LT	SWF	2	------	561837
C 253	LH SW PANEL-ETHER	SWF	8	------	561107
C 254	INST. PANEL RH-ENTR.DOOR SW.	TORRIX	5	------	562110
C 255	LH SW PANEL-JACOB	SWF	8	------	561107
C 256					
C 257					
C 258	LH SW PANEL-MULTI FUNC. SW	AMP FF	8	561188	------
C 259	LH SW PANEL-MULTI FUNC. SW	AMP FF	6	------	561108
C 260	FR SERVICE CPT-LUG DOOR LCK	PED WP	6	561606	561607
C 261	UNDER DASH RH-DOOR MODULE	AMP MNL	9	561670	561669
C 262	UNDER DASH RH-DOOR MODULE	AMP MNL	4	561551	561668
C 263	UNDER DASH RH-DOOR MODULE	AMP MNL	3	561667	561550
C 264	UNDER DASH RH-DOOR MODULE	AMP MNL	3	561667	561550
C 265	UNDER DASH RH-DOOR MODULE	AMP HDP-20	15	562011	562012
C 266					
C 267	UNDER DASH RH	AMP CPC	24	561642	561643
C 268	UNDER DASH LH-MIRROR	AMP MNL	6	561552	561515
C 269	UNDER DASH RH-MIRROR	AMP MNL	6	561552	561515
C 270	LH MIRROR POST	MOLEX	6	562070	562069
C 271	RH MIRROR POST	MOLEX	6	562070	562069
C 272	LH MIRROR	SPARTAN	6	------	990158
C 273	RH MIRROR	SPARTAN	6	------	990158
C 274					
C 275	UNDER DASH RH-DOOR MODULE	AMP MNL	9	561670	561669
C 276	UNDER DASH RH-LOCK SOL.VALVE	AMP MNL	2	561248	561247
C 277					
C 278					
C 279	UNDER DASH CYLINDER READ SW.	AMP MNL	2	561248	561247
C 280	LH CONSOLE-UNLOAD TAG SW.	NGR	10	------	562763
C 281					
C 282					
C 283					
C 284					
C 285					
C 286	RH SW PANEL-A/C & HEAT	SWF	8	------	561107
C 287	ENGINE COMPT-LTS SW	PED WP	2	561566	561690
C 288	RH SW PANEL-FRESH AIR	SWF	8	------	561107
C 289	RH SW PANEL-SWITCH LT	SWF	2	------	561837
C 290					
C 291					
C 292					
C 293					
C 294					
C 295					
C 296					
C 297	INSTRUMENT PANEL RH -LTS	AMP MNL	2	560900	560898
C 298					
C 299	LH CONSOLE SW-GALLEY	SWF	8	------	561107
C 300					
C 301					
C 302					
C 303					
C 304					
C 305					
C 306					
C 307					
C 308	LH CONSOLE SW-RHEOSTAT	TC	2	561030	560997
C 309	DDEC ENGINE-ECM POWER CON.	PED MP	5	------	562345
C 310	LH CONSOLE SW-LUG. DOOR LCK	SWF	8	------	561107
C 311	LH CONSOLE SW-HOS & PAS CHIME	SWF	8	------	561107

NO	LOCATION	TYPE	CAVITY	#PIN HOUSING	#SOCKET HOUSING
C 312	LH CONSOLE SW-READING LTS	SWF	8	------	561107
C 313	LH CONSOLE SW-GEN & FLUOR LTS	SWF	8	------	561107
C 314	LH CONSOLE SW-FR DEST. SIGN	SWF	8	------	561107
C 315	LH CONSOLE SW-LH STORE	SWF	8	------	561107
C 316	LH CONSOLE SPARE SWITCH	SWF	8	------	561107
C 317	LH CONSOLE SW-RH STORE	SWF	8	------	561107
C 318	LH CONSOLE SW-DRV WINDOW LIFT	SWF	8	------	561107
C 319					
C 320	LH CONSOLE SW-DRIVER'S LTS	SWF	8	------	561107
C 321					
C 322	LH CONSOLE DRV WIND LIFT MOT	PED PO	2	------	561848
C 323	LH CONSOLE CRUISE CTR SW PAN. AMP	CPC	9	561636	561637
C 324					
C 325	LH CONSOLE SW-KNEELING	SWF	8	------	561107
C 326	LH CONSOLE SW-SPARE	SWF	8	------	561107
C 327	ENGINE CONTROL	DEUTSCH	6	562583	562581
C 328	GALLEY-LAMP	AMP MNL	2	561248	561247
C 329	ENGINE TACHO SIGNAL	PED WP	3	561781	561789
C 330	GALLEY MICROWAVE SW LT	SWF	2	------	561837
C 331	GALLEY MICROWAVE SW	SWF	8	------	561107
C 332	GALLEY RH CONTAINER SW LT	SWF	2	------	561837
C 333	GALLEY RH CONTAINER SW	SWF	8	------	561107
C 334	GALLEY LH CONTAINER SW	SWF	8	------	561107
C 335	GALLEY LH CONTAINER SW LT	SWF	2	------	561837
C 336					
C 337	INSTR PANEL LH-UP WIPER SW	SWF	8	------	561107
C 338	INSTR PANEL LH-UP DEFROST SW	SWF	8	------	561107
C 339	INSTR PANEL LH-UP WASHER SW	SWF	8	------	561107
C 340	FR JCT. BOX FIRE PIEZO ALARM	AMP MNL	2	560900	560898
C 341	INSTR PANEL LH-HEAT MIRROR SW	SWF	8	------	561107
C 342	ENGINE RR START SW	DEUTSCH	2	562586	562585
C 343	INSTR PANEL LH-HEADLAMP SW	SWF	8	------	561107
C 344	INSTR PANEL LH-HAZARD LT SW	SWF	8	------	561107
C 345	INSTR PANEL LH-FOG LT SW	SWF	8	------	561107
C 346	INSTR PANEL LH-SWITCH LTS	SWF	2	------	561837
C 347	INSTR PANEL LH-DASH LT SW	AMP MNL	2	560900	560898
C 348	INSTR PANEL CENT-RACOR MODULE	MOLEX	6	562070	562067
C 349					
C 350	RH CONSOLE-THERMOMETER	AMP MNL	3	561667	561550
C 351	LH HAT RACK-FLUOR 110V	MOLEX	4	561477	561476
C 352	RH CONSOLE-DRV TEMP SENSOR	BURNDY	4	------	561104
C 353	INSTR PANEL RH-DRV FAN RHEOST	AMP MNL	6	561552	561515
C 354	INSTR PANEL RH-DRV TEMP CTR	AMP MNL	6	561552	561515
C 355	INSTR PANEL RH-FR TEMP CTR	AMP MNL	3	561667	561550
C 356					
C 357	INSTR PANEL RH-WATER TEMP GA	AMP MNL	3	561667	561550
C 358	INSTR PANEL RH-FUEL LEVEL GA	AMP MNL	3	561667	561550
C 359					
C 360					
C 361	FR ROOF-WIPER MOTOR	AMP FF	6	------	561186
C 362	FR ROOF-LAVATORY OCCUPIED LT	AMP MNL	2	561248	561247
C 363	FR ROOF-WATCH YOUR STEP LT	AMP MNL	2	561248	561247
C 364	FR ROOF-DESTINATION SIGN	AMP MNL	3	561667	561550
C 365	FR ROOF-UP WINDSHIELD DEFROST	AMP MNL	3	561667	561550
C 366	RH DASH PANEL-GRN & RED LEDS	AMP MNL	3	560908	562006
C 367	ENGINE COMPT-DIF OIL T SENSOR	PED WP	2	561566	561690
C 368	FR ROOF-DEST. SIGN BALLAST	AMP MNL	3	561667	561550
C 369	FR ROOF-DEST. SIGN OPER. SW	TORRIX	5	------	562110
C 370	FR ROOF-DEST. SIGN FLUOR.	AMP MNL	2	560900	560898
C 371	FR ROOF-DEST. SIGN FLUOR.	AMP MNL	2	560900	560898
C 372	FR ROOF-DEST. SIGN SPEED SW	MOLEX	4	561477	561476
C 373	FR ROOF-NO SMOKING LT	AMP MNL	2	561248	561247
C 374	LH SWITCH PANEL	AMP MNL	6	561552	561515
C 375					

CONNECTORS CODE

NO	LOCATION	TYPE	CAVITY	#PIN HOUSING	#SOCKET HOUSING
C 376					
C 377	LH SW PANEL-STOP ENG.OVERIDE	SWF	8	------	561107
C 378					
C 379					
C 380	LH CONSOLE-DDR CONNECTOR	DEUTSCH	6	562360	------
C 381					
C 382					
C 383					
C 384					
C 385					
C 386	LH CONSOLE-WCL POWER SYSTEM	SWF	8	------	561107
C 387	RR JCT BOX (WCL)	AMP MNL	9	561661	561662
C 388	RR JCT BOX (WCL)	AMP MNL	12	561735	561734
C 389	WCL REAR DOOR	MOLEX	4	561477	561476
C 390	LAVATORY WALL-WCL REMOTE CTR	SWF	8	------	561107
C 391	LAVATORY WALL-WCL LAMP	SWF	8	------	561107
C 392	LAVATORY WALL-WCL SW. LT.	SWF	2	------	561835
C 393	LAVATORY WALL-WCL REMOTE SYS.	AMP CPC	4	561686	561687
C 394	UNDER INSTR. PANEL- B/U MONITOR	AMP MNL	4	560851	560852
C 395	DRIVER'S COMPT. - B/U MONITOR	AMP	5	------	------
C 396	FR SECT. LH HAT RACK-SPEAKER	MOLEX	4	562507	562503
C 397	ENGINE COMPT. CRADLE ACC.	DEUTSCH	40	562281	562284
C 398					
C 399					
C 400	ENGINE COMPT. BLOCK HEATER	PED MP	3	561781	561782
C 401					
C 402	RR DRIVE AXLE-AIR DRYER	PED MP	2	------	562251
C 403	GALLEY FRIGO NORCOLD	AMP MNL	2	561248	561247
C 404	GALLEY LAMP	AMP MNL	2	561248	561247
C 405					
C 406	FR JCT BOX COMPT.-ABS	AMP MNL	2	560900	560898
C 407	ENGINE COMPT. -SIGNAL	PED WP	6	561606	561607
C 408	ENGINE COMPT. -SIGNAL	PED WP	6	561606	561607
C 409	ENGINE CPT -LOW COOL. LEVEL	PED MP	2	------	562350
C 410	FR JCT BOX-DIODE CONNECTOR	AMP MNL	15	561987	561986
C 411	FR JCT BOX-DIODE CONNECTOR	AMP MNL	15	561987	561986
C 412	LH SW PANEL-MASTER SWITCH	SWF	8	------	561107
C 413	ENG CPT-A/C HI UNLOAD PRS SW	PED WP	2	561566	561690
C 414	RR JCT BOX	AMP MNL	9	561670	561669
C 415	ENGINE CRADLE-FAN SIGNAL	PED WP	3	561781	561782
C 416	ENGINE CRADLE-FAN SIGNAL	PED P-C	3	562237	------
C 417	FRONT JCT BOX-DIODES	AMP MNL	15	561987	561986
C 418	INSTR. PANEL LH-HTR WINDSH.SW	SWF	8	------	561107
C 419	FR JCT BOX-RETARDER OR JACOB	AMP MNL	3	561667	561550
C 420	ENGINE COMPT. WEBASTO WATER HTR	TC	2	561597	------
C 421	ENGINE COMPT. WEBASTO WATER HTR	TC	1	561073	------
C 422	ENGINE COMPT. WEBASTO WATER HTR	TC	2	561597	------
C 423					
C 424	UNDER INSTRUMENT PANEL CENTER	AMP MNL	3	561667	561550
C 425	FR JCT BOX-DIODES	AMP MNL	15	561987	561986
C 426	ENGINE COMPT. CLUTCH CTR FAN	PED WP	3	561781	561782
C 427					
C 428					
C 429	FR JCT BOX COMPT.	AMP MNL	6	561552	561515
C 430	LH CONSOLE-TIMER	AMP FF	8	561188	562363
C 431	LH CONSOLE-PRE HEAT.	TAB AMP	1	561540	561539
C 432	ENGINE CPT.-PROX. SW. DOOR AJAR	DEUTSCH	4	562479	562477
C 433	FR SERVICE CPT. KNEEL. PRESS. SW	PED WP	2	561566	561690
C 434	FRONT JCT. BOX-DIODES	AMP MNL	15	561987	561986
C 435	FR SERVICE CPT.(RH) KNEEL. PIEZO	AMP MNL	2	560900	560898
C 436	RH HAT RACK-WCL CENTER ROOF ACC	AMP CPC	16	561639	561640
C 437	RH HAT RACK-WCL FR & RR SECT.	AMP CPC	24	561642	561643
C 438					
C 439					

NO	LOCATION	TYPE	CAVITY	#PIN HOUSING	#SOCKET HOUSING
C 440					
C 441					
C 442					
C 443					
C 444					
C 445					
C 446					
C 447					
C 448					
C 449					
C 450	SOUND SYS. JCT. PANEL	MOLEX	4	562507	562503
C 451	WIRELESS MICRO-FIRST CPT BAG	MOLEX	2	562550	562549
C 452	UNDER DASH INSTR. PANEL	MOLEX	2	562550	562549
C 453	SOUND SYS. JCT.PANEL-VCP	PED WP	2	561566	561680
C 454	SOUND SYS.JCT.PAN.-FILT. VCP	PED WP	2	561566	561680
C 455	WIRELESS MICRO-LH HAT-RACK	CINCH	2	562554	562551
C 456	WORLD TRANSM.-RETARDER ACCUM.	PED MP	2	------	562427
C 457	WORLD TRANSM.-MAIN CONNECTOR	DEUTSCH	31	562572	562536
C 458	WORLD TRANSM.-TURBINE SP.SENS	PED MP	2	------	562426
C 459	WORLD TRANSM.-ENGINE SP.SENS.	PED MP	2	------	562426
C 460	WORLD TRANSM.-SPEED SENSOR	ITT	2	------	562541
C 461	WORLD TRANSM.-RETARDER TEMP.	PED MP	2	561566	561680
C 462	WORLD TRANSM.-RETARD SOL."K"	PED MP	2	------	562426
C 463	WORLD TRANSM.-SENSOR CONN.	DEUTSCH	16	562570	562571
C 464	RR JCT BOX-DDR CONN W.T.	DEUTSCH	6	------	562360
C 465	LH CONSOLE-SHIFTER SELECTOR	PED	20	------	562825
C 466	FR SERVICE CPT.-RESIS. MOD.	PED WP	3	------	562428
C 467	FR SERVICE CPT.-RESIS. MOD.	PED WP	3	------	562428
C 468			8		
C 469					
C 470	FR LH UPPER WHELL CPT-SILENT 1000	AMP MNL	2	561248	561247
C 471	FR LH UPPER WHELL CPT-SILENT 1000	AMP MNL	2	561248	561247
C 472	FR LH UPPER WHELL CPT-SILENT 1000	PED WP	2	561566	561690
C 473	FR LH UPPER WHELL CPT-SILENT 1000	AMP MNL	3	561667	561550
C 474	DRIVER CPT.-TEMP. SENSOR	AMP MNL	2	561247	561248
C 475	RR JCT BOX-SPEED SIGN CONNECTOR	AMP MNL	2	561248	561247
C 475M	RR JCT BOX-SPEED SIGN MANUAL TR.	MOLEX	6	562070	562069
C 475W	RR JCT BOX-SPEED SIGN WORLD TR.	MOLEX	6	562070	562069
C 476					
C 477					
C 478	ELECTRONIC DESTINATION SIGN	AMP CPC	9	561636	561637
C 479	HVAC MODULE				
C 480					
C 481					
C 482					
C 483	FR SERVICE CPT. (NOT USED)	PED PC	2	------	562237
C 384					
C 385					
C 386					
C 387					
C 388					
C 389					
C 390					
C 391					
C 392					
C 393					
C 394					
C 395					
C 396					
C 397					
C 398					
C 399					
C 500	FR LH UPPER WHELL CPT -PRODRIVER	MOLEX	6	562070	562069
C 501	FR LH UPPER WHELL CPT -PRODRIVER	PED MP	7	562433	------

CONNECTORS CODE

NO	LOCATION	TYPE	CAVITY	#PIN HOUSING	#SOCKET HOUSING
C 502	LH CONSOLE-PRE HEATER SW.	SWF	8	------	561107
C 503	LH CONSOLE-PRE HEATER SW.	SWF	2	------	561837
C 504	LH CONSOLE WEBASTO TIMER	AMP	8	561188	562363
C 505	LH CONSOLE ESPAR TIMER	AMP	9	------	562681
C 506	FR JCT BOX CPT. DIGITAL CLOCK	AMP	4	561685	561687
C 507	FR SECT. LH HAT-RACK DIG. CLOCK	MOLEX	4	561477	561476
C 508	RR JCT BOX-FAN CLUTCH RETARDER	AMP MNL	6	561552	561515
C 509	FR LH UPPER WHELL CPT -DATA LOGGER	PED MP	16	------	562530
C 510	FR LH UPPER WHELL CPT -DATA LOGGER	DEUTSCH	9	562531	------
C 511	FR LH UPPER WHELL CPT -DATA LOGGER	PED MP	4	562532	------
C 512	FR LH UPPER WHELL CPT -DATA LOGGER	PED MP	10	562533	------
C 513	FR LH UPPER WHELL CPT -DATA LOGGER	AMP MNL	3	561667	561550
C 514	FR LH UPPER WHELL CPT -DATA LOGGER	PED MP	6	562433	562417
C 515	FR JCT BOX CPT.-INTERCOM	MOLEX	4	561477	561476
C 516	FR JCT BOX CPT.-INTERCOM	MOLEX	6	562070	562069
C 517	LAVATORY WALL-INTERCOM	MOLEX	6	562070	562069
C 519	UNDER DASH RH-SEDAN DOOR	HUMPHREY	2	------	562580
C 520	UNDER DASH RH-SEDAN DOOR	HUMPHREY	2	------	641385
C 521	UNDER DASH RH-SEDAN DOOR	HUMPHREY	2	------	641385
C 522	FR JCT BOX-DAYTIME LTS MODULE	BOSCH	5	------	561183
C 523	FR JCT BOX-FUSE BLOCK	PED	8	562647	562646
C 524	FR JCT BOX-FUSE BLOCK	PED	8	562647	562646
C 525	FR JCT BOX-FUSE BLOCK	PED	8	562647	562646
C 526	FR JCT BOX-FUSE BLOCK	PED	8	562647	562646
C 527	FR JCT BOX-FUSE BLOCK	PED	8	562647	562646
C 528	FR JCT BOX-FUSE BLOCK	PED	8	562647	562646
C 529	FR JCT BOX-12V OUTLET	AMP MNL	2	561247	561248
C 530	RR JCT BOX-FUSE BLOCK	PED	8	562647	562646
C 531	RR JCT BOX-FUSE BLOCK	PED	8	562647	562646
C 532	RR JCT BOX-FUSE BLOCK	PED	8	562647	562646
C 533	RR JCT BOX-FUSE BLOCK	PED	8	562647	562646
C 534	RR JCT BOX-FUSE BLOCK	PED	8	562647	562646
C 535	RR JCT BOX-FIRE MODULE DETECT.	AMP MNL	3	561667	561550
C 536	UNDER DASH RH-DRIVER'S HTR TEMP. CTR	AMP MNL	6	561552	561515
C 537	BATT. CPT.-A/C PRESS. SIGN. RLY	AMP MNL	2	561248	561247
C 538	FR SERVICE CPT.-OUTSIDE TEMP. SENSOR	AMP MNL	2	561248	561247
C 539	HVAC DASH MODULE OUTPUT CON	MOLEX	24		562780
C 540	HVAC DASH MODULE INPUT CON	MOLEX	22		562781
C 541	SOUND SYS. JCT PANEL-AUDIO SEAT SYS.	PED WP	2	561566	561690
C 542	LH HAT RACK-AUDIO SEAT SYSTEM	AMP MNL	3	561667	561550
C 543	RR JCT BOX-PARK. BRAKE STOP LTS RESIS.	PED WP	2	561566	561690
C 544	SOUND SYS JCT PANEL-AUDIO SEAT SYS.	PED WP	3	561781	562428
C 545	LH HAT RACK-AUDIO SEAT SYSTEM	AMP MNL	3	561667	561550
C 546					
C 547	RH DASH PANEL-ACCESSORIES	AMP CPC	37	561645	561646
C 548	LH DASH PANEL-T.T. LT. TEST SW.	SWF	8	------	561107
C 549	LH CONSOLE-FAN CLUTCH OVERRIDE SW.	SWF	8	------	561107
C 550	LAST LUGG. CPT. -WCL RICON	AMP CPC	16	561694	561695
C 551	LAST LUGG. CPT. -WCL RICON	AMP CPC	16	561694	561695
C 552	LAST LUGG. CPT. -WCL RICON	AMP CPC	9	561636	561637
C 553	UNDER DASH R.H. - CONTROL. HEAD	MOLEX	16	--------	562559
C 554	UNDER DASH R.H. - CONTROL. HEAD	MOLEX	16	--------	562559
C 555	UNDER DASH R.H. - CONTROL. HEAD	MOLEX	16	--------	562559
C 556	UNDER DASH R.H. - RADIO ACC.	MOLEX	2	562550	562549
C 557	UNDER DASH R.H. - RADIO ACC.	MOLEX	9	562556	562555
C 558	UNDER DASH R.H. - RADIO ACC.	MOLEX	4	562507	562503
C 559	L.H. HAT RACK - PASSENGER SPK.	MOLEX	4	562507	562503
C 560	SOUND SYS. JCT. PANEL - POWER AMPLI	MOLEX	4	562507	562503
C 561	L.H. HAT RACK - WIRELESS MICRO	MOLEX	4	562507	562503
C 562	L.H. HAT RACK - VCP	MOLEX	9	562556	562555
C 563	L.H MODESTY PANEL - DRIVERS SPK.	MOLEX	4	562507	562503
C 564	L.H MODESTY PANEL - MICRO	MOLEX	4	562507	562503
C 565	R.H MODESTY PANEL - MICRO	MOLEX	4	562507	562503
C 566	L.H. CONSOLE - BOOM MICRO	MOLEX	4	562507	562503
C 567	L.H. CONSOLE - DRIVERS MICRO	MOLEX	4	562507	562503

NO	LOCATION	TYPE	CAVITY	#PIN HOUSING	#SOCKET HOUSING
C 568	SOUND SYS. JCT. PANEL - PASS. SPK	CINCH	4	562553	562552
C 569	SOUND SYS. JCT. PANEL - POWER AMPLI.	MOLEX	9	562556	562555
C 570	UNDER DASH PANEL TTLT	MOLEX	6		562464
C 571	UNDER DASH PANEL TTLT	MOLEX	20		562778
C 572	UNDER DASH PANEL TTLT	MOLEX	18		562779
C 573	UNDER DASH PANEL TTLT	MOLEX	16		562465
C 574	HAT -RACK FLUOR. INDIRECT LIGHTING	MOLEX	6	----------	562759
C 575					
C 576					
C 577					
C 578					
C 579					
C 580					
C 581					
C 582	FRONT SERVICE CMPT. - WINDOWS AJAR	PED WP	2	561566	561690
C 583	L.H. DASH PANEL - MASTER KEY	DEUTSCH	2	562486	562485
C 584	FRONT SERVICE CMPT. - AIR HORH	HUMPHREY	3	--------	641385
C 585					
C 586					
C 587					
C 588	FRONT SERVICE CPT. CENTER SOUND SYS.	AMP. CPC	37	561645	561646
C 589	UNDER DASH - L.H. MIRROR	AMP MNL	9	561670	561669
C 590	UNDER DASH - R.H. MIRROR	AMP MNL	9	561670	561669
C 591	L.H.CONSOLE - MIRROR L.H.	EURAMTEC	8	--------	562799
C 592	L.H.CONSOLE - MIRROR R.H.	EURAMTEC	8	--------	562799
C 593	BATTERY CMPT. - CHARGER	PED WP	3	561781	561782
C 594	FRONT ROOF - DRIVERS LIGHT	LEEKRAFT		---------	562803
C 595	DASH CENTER MODULE - OPEN DOOR	MOLEX	4	561477	561476
C 596	DASH CENTER MODULE - CLOSE DOOR	MOLEX	4	561477	561476
C 597	L.H. DASH PANEL - DISPLAY SET SW.	MOLEX	5		562812
C 598	L.H. DASH PANEL - DISPLAY SET SW.	MOLEX	5		562812
C 599					
C 600	ENGINE CPT.-A/C LOW PRESS SW. UNLOAD	PED	2	562348	562471
C 601	L.H. ROOF - WINDOW AJAR	AMP MNL	2	561248	561247
C 602	L.H. ROOF - WINDOW AJAR	MOLEX	4	561477	561476
C 603	R.H. ROOF - WINDOW AJAR	AMP MNL	2	561248	561247
C 604					
C 605	HAT RACK - MOTOR FAN	PED	2	560997	561030
C 606	HAT RACK - MOTOR FAN	PED	2	560997	561030
C 607	FRONT SERVICE CMPT. RPM SIGNAL	PED WP	2	561566	561690
C 608	FRONT SERVICE CMPT. SPEED SIGNAL	PED WP	2	561566	561690
C 609	LAVATORY - NIGHT LIGHT				
C 610	RR JCT BOX	AMP MNL	6	561552	561515
C 611					
C 612					
C 613					
C 614					
C 615					
C 616					
L X	CLUSTER	JAE	22		562766
L Y	CLUSTER	JAE	30		562767
R X	CLUSTER	JAE	22		562764

CONNECTORS CODE

NO	LOCATION	TYPE	CAVITY	#PIN HOUSING	#SOCKET HOUSING
C AA1	BEHIND DASH - SONALERT	BOSCH	5		561183
C AA2	BEHIND DASH - SONALERT	BOSCH	5		561183
C X1	FR LH UPPER WHELL CPT-ABS	WABCO	18		562792
C X2	FR LH UPPER WHELL CPT-ABS	WABCO	6		562793
C X3	FR LH UPPER WHELL CPT-ABS	WABCO	9		562794
C X4	FR LH UPPER WHELL CPT-ABS	WABCO	15		562795`
C S	RR JCT BOX ECU WORLD TR.	PED	32		562817
C T	RR JCT BOX ECU WORLD TR.	PED	32		562824
C V	RR JCT BOX ECU WORLD TR.	PED	32		562823
CV I2	RR JCT BOX-WORLD TRANSM. & EATON	AMP CPC	9	561636	561637
C Y	CLUSTER	JAE	30		562765
C 1	FR JCT BOX COMPARTMENT	AMP CPC	14	561585	561584
C 2	FR JCT BOX COMPARTMENT	AMP CPC	16	561639	561640
C 3	FR JCT BOX COMPARTMENT	AMP CPC	24	561641	561643
C 4	FR JCT BOX COMPARTMENT	AMP CPC	37	561644	561646
C 5	FR SERVICE COMPT.-UNDERNEATH	AMP CPC	37	561644	561646
C 6	FR SERVICE COMPT.-UNDERNEATH	AMP CPC	16	561639	561640
C 7					
C 8	FR SERVICE COMPT.-UNDERNEATH	AMP CPC	24	561641	561643
C 9	FR SERVICE COMPT.-UNDERNEATH	AMP CPC	24	561641	561643
C 10					
C 11	FR SERVICE COMPARTMENT	AMP CPC	37	561644	561646
C 12	FR SERVICE COMPARTMENT	AMP CPC	16	561639	561640
C 13	LH CONSOLE-CTR MIRROR	AMP MNL	6	561552	561515
C 14	UNDER DASH-LH MIRROR	AMP MNL	9	561661	561662
C 15	RR JCT BOX	AMP CPC	24	561641	561643
C 16	LH CONSOLE SW-CRUISE ON OFF	EATON	10	------	562763
C 17	LH CONSOLE SW-CRUISE RESUME	EATON	10	------	562763
C 18	LH CONSOLE SW-CRUISE SET	EATON	10	------	562763
C 19	LH CONSOLE DECEL SW	EATON	10	------	562763
C 20	RR JCT BOX	AMP CPC	37	561644	561646
C 21	RR JCT BOX	AMP CPC	24	561641	561643
C 22	RR JCT BOX - EATON TRANSM.	AMP MNL	6	561552	561515
C 23	DDEC ENGINE-ECM J1939	PED MP	6	-------	561962
C 24	DDEC ENGINE	PED WP	1	561605	561577
C 25	RR JCT BOX - EATON TRANSM. J1939	DEUTCH	3	562877	562884
C 26	HYD & MAN TRANSM.-NEUT.& B/U	PED WP	4	561610	561611
C 27	HYD & MAN TRANSM.-SPEED SENS.	PED WP	2	561566	561690
C 28	EATON TRANSMISSION	DEUTCH	3	562877	562884
C 29	EATON TRANSMISSION	PED MP	6	562878	------
C 30	RR JCT BOX - ECU EATON TRANSM.	PED MP	32	------	562866
C 31	RR JCT BOX - ECU EATON TRANSM.	PED MP	24	------	562865
C 32	DDEC ENGINE-ECM	PED	30	------	561600
C 33	RR JCT BOX - EATON TRANSM.	DEUTCH	9	562531	------
C 34	RH. CONSOLE - EATON TRANSM. SHIFTER	PED MP	3	------	562871
C 35	RR JCT BOX	AMP CPC	24	561642	561643
C 36	RH. CONSOLE - EATON TRANSM. SHIFTER	PED MP	24	------	562874
C 37	RR SECTION-LH HAT RACK	MOLEX	6	562558	562557
C 38	RR SECTION-RH HAT RACK	MOLEX	6	562558	562557
C 39	LH CONSOLE - EATON TRANSM. DISPLAY	AMP MNL	4	561551	561668
C 40	RR JCT BOX - EATON TRANSM. J1939	DEUTCH	3	562877	562884
C 41	LAVATORY ROOF FLUORESCENT	AMP MNL	2	560900	560898
C 42	LAVATORY BACK WALL-WTR TANK	AMP MNL	2	560900	560898
C 43	LAVATORY BACK WALL-ACCES.	AMP MNL	9	561661	561662
C 44	EATON TRANSM. J1939	DEUTCH	3	562877	562884
C 45	FR JCT BOX COMPARTMENT	AMP CPC	24	561642	561643
C 46	EATON TRANSM. J1939	DEUTCH	3	562877	562884
C 47	FR SERVICE COMPARTMENT	AMP CPC	16	561694	561695
C 48					
C 49	BATTERIE COMPT.-LT	AMP MNL	2	561248	561247
C 50	FR SERVICE COMPT.-LOW BUOY	PED WP	1	561605	561577
C 51					
C 52	RR JCT BOX	AMP CPC	22	561709	561710
C 53					
C 54					
C 55	RH SWITCH PANEL	AMP CPC	9	561636	561637
C 56					

NO	LOCATION	TYPE	CAVITY	#PIN HOUSING	#SOCKET HOUSING
C 57					
C 58	RR JCT BOX AC PANEL	DEUTSCH	24	562280	562283
C 59	RR JCT BOX AC PANEL	AMP CPC	14	561584	561583
C 60	RR JCT BOX COMPT.-LT	AMP MNL	2	561248	561247
C 61	LUGGAGE COMPARTMENT LTS	AMP MNL	2	561248	561247
C 62	LUGGAGE COMPARTMENT LTS	AMP MNL	2	561248	561247
C 63	LUGGAGE COMPARTMENT LTS	AMP MNL	2	561248	561247
C 64	LUGGAGE COMPARTMENT LTS	AMP MNL	2	561248	561247
C 65	LUGGAGE COMPARTMENT LTS	AMP MNL	2	561248	561247
C 66	LUGGAGE COMPARTMENT LTS	AMP MNL	2	561248	561247
C 67	LUGGAGE COMPARTMENT LTS	AMP MNL	2	561248	561247
C 68	LUGGAGE COMPARTMENT LTS	AMP MNL	2	561248	561247
C 69	RR AXLE ACC-INSIDE PVC END	PED WP	6	561568	561578
C 70	LH CONSOLE	AMP CPC	16	561642	561643
C 71	FR JCT BOX COMPARTMENT	AMP CPC	37	561645	561646
C 72	FR JCT BOX COMPARTMENT	AMP CPC	24	561642	561643
C 73	DASH CENTER PANEL	AMP CPC	16	561639	561640
C 74	FR JCT BOX COMPARTMENT	AMP CPC	37	561645	561646
C 75					
C 76	LUGGAGE COMPT.-AIR RET.SENS.	AMP MNL	2	561248	561247
C 77	LUGGAGE COMPT.-AIR RET.SENS.	AMP MNL	2	561248	561247
C 78					
C 79					
C 80	LUGGAGE COMPT.-AIR RET.SENS.	AMP MNL	2	561248	561247
C 81	PASSENGER COMPT.-AISLE LTS	AMP MNL	2	560900	560898
C 82	ENTRANCE DOOR	MOLEX	6	562070	562069
C 83	ENTRANCE DOOR-PROIMITY SW	MOLEX	4	561477	561476
C 84	ENTRANCE DOOR-PRESSURE SW	PED WP	2	561566	561690
C 85	UNDER INSTRUMENT PANEL LH	AMP MTA-100	------	562248	------
C 86					
C 87	RR END ROOF	AMP CPC	9	561636	561637
C 88	RR END ROOF-CLEARANCE LTS	AMP MNL	2	560900	560898
C 89	RR END ROOF-B/U NONITOR	AMP CPC	4	561582	561581
C 90	RR JCT BOX	AMP CPC	15	561987	561986
C 91	RR JCT BOX	AMP CPC	37	561714	561713
C 92	FR LH UPPER WHELL CPT-ABS	AMP CPC	9	561635	561637
C 93	FR LH UPPER WHELL CPT-ABS		35	------	641094
C 94					
C 95	CONDENSOR CPT - LIQ. SOL. VALVE	PED WP	2	561566	561690
C 96	FR AXLE ACCESSORIES	AMP CPC	14	561585	561585
C 97	RR AXLE ACC-INSIDE PVC END	PED WP	6	561568	561578
C 98	FR SERVICE COMPT-EL.FT.PEDAL	PED WP	3	561782	561781
C 99	FR SERVICE COMPT LTS	AMP MNL	2	561248	561247
C 100					
C 101	FR SERVICE COMPT-ELEC. HORNS	PED WP	2	561566	561690
C 102	FR SERV & SIDE CPT-FLASH. LH	GROTE	2	------	562155
C 103	FR SERV & SIDE CPT-MARKERS	GROTE	2	------	562155
C 104	FR SERV & SIDE CPT-FLASH. RH	GROTE	2	------	562155
C 105	FR SERVICE COMPT-LIQ.S.VALVE	PED WP	2	561566	561690
C 106	FR SERVICE COMPT-WATER VALVE	PED WP	2	561566	561690
C 107	EVAPORATOR COMPT-DAMPER	PED WP	2	561566	561690
C 108	FR SERVICE COMPT-KNEEL.SYS	PED WP	2	561566	561690
C 109	FR SERVICE COMPT-KNEEL.SYS	PED WP	2	561566	561690
C 110	FR SERVICE COMPT-KNEEL.SYS	PED WP	2	561566	561690
C 111	EVAPORATOR COMPT-DAMPER	DEUTSCH	2	562486	562485
C 112	EVAPORATOR COMPT-SPEED MOT CTRL	DEUTSCH	5	------	562566
C 113	BATT. & RR J.B.CPT.MARKER LT	GROTE	2	------	562155
C 114	RR J. BOX CPT DOOR DIR LT LH	GROTE	2	------	562155
C 115	ENGINE COMPT-AIR DRYER	PED WP	2	561566	561690
C 116	ENGINE COMPT. LTS	PED WP	1	561605	561577
C 117					
C 118	ENGINE COMPT-LAVATORY FAN	PED WP	2	561566	561690
C 119	ENGINE CPT RR DOOR RH LO LAMP	PED WP	6	561606	561607
C 120	ENGINE CPT RR DOOR LH LO LAMP	PED WP	6	561606	561607
C 121	BATTERIE CPT. DOOR DIR LT RH	GROTE	2	------	562155
C 122	ENGINE CPT-UNLOAD TAG SYSTEM	PED WP	2	561566	561690
C 123	TAG AXLE-UNLOAD TAG RH VALVE	PED WP	2	561566	561690

CONNECTORS CODE

NO	LOCATION	TYPE	CAVITY	#PIN HOUSING	#SOCKET HOUSING
C 124	ENGINE CPT-ETHER SW	PED WP	2	561566	561690
C 125	ENGINE CPT-B/U ALARM	PED WP	2	561566	561690
C 126	ENGINE CPT-FLUSHING PUMP	PED WP	2	561566	561690
C 127	ENGINE CPT-FUEL FILTER	PED WP	2	561566	561690
C 128	ENGINE CPT-A/C COMPR.CLUTCH	ITT SS	2	561813	561812
C 129	ENGINE CPT-PRE-HEAT WATER	AMP FF	6	561672	561186
C 130	ENGINE CPT-UNLOADER	ITT SS	2	561813	561812
C 131	ENGINE CPT-UNLOADER	ITT SS	2	561813	561812
C 132	ENGINE CPT-A/C LO PRESS SW	PED WP	2	561566	561690
C 133	ENGINE CPT-A/C HI PRESS SW	PED WP	2	561566	561690
C 134	FR JCT BOX-LUGGAGE DIODE CON.	AMP MNL	15	561987	561986
C 135	FR JCT BOX-LUGGAGE DIODE CON.	AMP MNL	15	561987	561986
C 136	RR JCT BOX - A/C PANEL DIODE CONN.	AMP MNL	15	561987	561986
C 137	RR JCT BOX-TRANSMITTER	AMP MNL	2	560900	560898
C 138	RR JCT BOX-CONTROL MODULE	AMP HDP	15	------	562012
C 139	RR JCT BOX-LOGIC MODULE	AMP HDP	15	562011	------
C 140	HVAC DASH MODULE THERMOMETER	MOLEX	4		562782
C 141	INSTRUMENT PANEL LH UNLOAD TAG	AMP	2	561248	561247
C 142	LAVATORY DOOR WALL	AMP MNL	2	561248	561247
C 143	LAVATORY DOOR WALL	AMP MNL	3	560908	562006
C 144	UNDER LH SEAT-AISLE LTS	AMP MNL	4	560851	560852
C 145	RR JCT BOX CPT-RR SIDE LTS	AMP MNL	9	561670	561669
C 146	ENGINE CPT-MODULATOR VALVE	AMPHENOL	2	------	560412
C 147	BATT & RR J.B.CPT-DOCK.LTS	PED WP	2	561566	561690
C 148					
C 149	CONDENSER CPT-FAN MOTOR	ORDNANCE	3	562555	562001
C 150					
C 151	EVAPORATOR CPT-THERMOSTAT	ITT SS	2	561813	562159
C 152	CONDENSER CPT-FUEL GAUGE	PED WP	4	561610	561611
C 153	EVAPORATOR CPT-AIR AMB. SENS	AMP MNL	2	561248	561247
C 154	EVAPORATOR CPT-FRESH AIR SENS	ITT SS	2	561813	561812
C 155	EVAPORATOR CPT-WATER VALVE	PED WP	4	561610	561611
C 156	EVAPOR. CPT-BYPASS WATER VAL.	PED WP	2	561566	561690
C 157	EVAPORATOR CPT-WATER PUMP	PED WP	2	561566	561690
C 158	CONDENSER CPT-A/C LO TEMP.	PED WP	2	561566	561690
C 159	CONDENSER CPT-A/C HI TEMP.	PED WP	2	561566	561690
C 160	FR AXLE-ABS RH SENSOR	WABCO	2	641132	------
C 161	FR AXLE-ABS RH VALVE	WABCO	3	------	641098
C 162	FR AXLE-ABS LH VALVE	WABCO	3	------	641098
C 163	FR AXLE-ABS LH SENSOR	WABCO	2	641132	------
C 164	RR AXLE-ABS LH SENSOR	DEUTSCH	2	562486	562485
C 165	RR AXLE-ABS LH VALVE	WABCO	3	------	641098
C 166	RR AXLE-ABS RH VALVE	WABCO	3	------	641098
C 167	RR AXLE-ABS RH SENSOR	DEUTSCH	2	562486	562485
C 168	RR AXLE-ABS OPT ATC	PED WP	2	561566	561690
C 169	RR JCT BOX-SPEED SW	AMP HDP	15	------	562012
C 170	FR JCT BOX-FLASHER UNIT	TC	2	------	561940
C 171	LH CONSOLE	AMP CPC	24	561642	561643
C 172	ENGINE COMPT-WATER TANK HEAT.	PED WP	2	561566	561690
C 173	LAV.POTABLE-WATER TANK HEAT.	AMP MNL	2	560900	560898
C 174	UNDER DASH RH-HTR MODULE	AMP MNL	9	561670	561669
C 175	UNDER DASH RH-HTR MODULE	AMP MNL	9	561670	561669
C 176	UNDER DASH RH-WIPER PULSE	AMP FF	6	------	561186
C 177	UNDER DASH RH-WIPER MOTOR	AMP FF	6	------	561186
C 178	UNDER DASH RH-LH FAN	TC	2	561030	560997
C 179	UNDER DASH RH-RH FAN	TC	2	561030	560997
C 180	RR JCT BOX-DIODE CONNECTOR	AMP MNL	15	561987	561986
C 181	RR JCT BOX-DIODE CONNECTOR	AMP MNL	15	561987	561986
C 182					
C 183	FR SERVICE CPT-KNEELING PAN.	PED WP	4	561610	561611
C 184	FR SERVICE CPT-KNEELING SW	ITT SS	3	561111	561080
C 185					
C 186	RR JCT BOX CPT.-SPEED SIGN.TR	PED WP	2	561566	561690
C 186M	RR JCT BOX CPT.-SPD SIGN. M.TR	PED WP	2	561566	561690
C 186W	RR JCT BOX CPT.-SPD SIGN. WT	PED WP	2	561566	561690
C 187	FR JCT BOX-RPM RESISTOR CON.	AMP MNL	6	561552	561515
C 188					

NO	LOCATION	TYPE	CAVITY	#PIN HOUSING	#SOCKET HOUSING
C 189	ENGINE CPT RR DOOR B/U LT	PED WP	2	561566	561690
C 190	ENGINE CPT RR DOOR TAIL LT	PED WP	2	561566	561690
C 191	ENGINE CPT RR DOOR RH STOP LT	PED WP	2	561566	561690
C 192	ENGINE CPT RR DOOR RH DIR. LT	PED WP	2	561566	561690
C 193					
C 194	ENGINE CPT RR DOOR LH DIR. LT	PED WP	2	561566	561690
C 195	ENGINE CPT RR DOOR LH STOP LT	PED WP	2	561566	561690
C 196	ENGINE CPT RR DOOR CYCLOP LT	PED WP	2	561566	561690
C 199	ENGINE CPT RR DOOR LICENCE LT	DOM AUTO	2	930210	------
C 200	RH HAT RACK-FLUORESCENT	AMP MNL	2	561248	561247
C 201	RH HAT RACK-FLUORESCENT	AMP MNL	2	561248	561247
C 202	RH HAT RACK-INDIRECT LIGHTING	MOLEX	2	--------	562758
C 203	RH HAT RACK-INDIRECT LIGHTING	MOLEX	6	--------	562759
C 204	RH HAT RACK-GENERAL LT	AMP MNL	2	560900	560898
C 205	FR SECT.-RH HAT RACK SPEAKER	AMP MNL	9	561661	561662
C 206	RH HAT RACK-READING LT	AMP FF	4	----------	562756
C 207	LH HAT RACK-READING LT	AMP FF	4	----------	562756
C 208	LH HAT RACK-BALLAST	MOLEX	2	----------	562758
C 209	LH HAT RACK HOTESS CHIME	AMP MNL	3	561667	561550
C 210	FR SECT.-LH HAT RACK SPEAKER	AMP MNL	9	561661	561662
C 211	FR ROOF-STORE LH	AMP MNL	2	560900	560898
C 212	FR ROOF-STORE RH	AMP MNL	2	560900	560898
C 213	FR ROOF-CLEARANCE LT	AMP MNL	2	560900	560898
C 214	ENGINE CPT J1922				
C 215	TAG AXLE - A.T.C. SYSTEM				
C 216	TAG AXLE - A.T.C. SYSTEM				
C 217					
C 218					
C 219					
C 220	RR.JCT.BOX-FUEL PRIME PUMP	TC	1	561070	561073
C 221					
C 222					
C 223					
C 224					
C 225					
C 226					
C 227					
C 228					
C 229					
C 230	ENG.CPT.-FUEL PRIME PUMP FEED	DEUTSCH	2	562486	562485
C 231	ENG.CPT.-FUEL PRIME PUMP SW.	PED WP	2	561566	561690
C 232	ENG.CPT.-FUEL PRIME PUMP	PED WP	2	561566	561690
C 233	FR. SERVICE COMPT.	VDO	8		562043
C 234	FR. SERVICE COMPT.	VDO	8		562044
C 235	FR. SERVICE COMPT.	VDO	8		562041
C 236	LUGGAGE COMPARTEMENT	AMP MNL	4	560851	560852
C 237	UNDER DASH LH-JACOB CLUTCH SW	ITT SS	3	561111	561080
C 238	RR JCT BOX-DIODE CONNECTOR	AMP MNL	9	561670	561669
C 239	FR SERVICE CPT-HI BUOY VALVE	PED WP	2	561566	561690
C 240	FR SERVICE CPT-KNEEL PROX SW	PED WP	2	561566	561690
C 241					
C 242	FR SERVICE CPT-MARK & DIR LT	ITT SS	3	561111	561080
C 243	FR SERVICE CPT-HEADLAMPS	TC	3	------	561071
C 244	FR SERVICE CPT-LH FOG LAMP	ITT SS	2	561813	561812
C 245	FR SERVICE CPT-RH FOG LAMP	ITT SS	2	561813	561812
C 246	FR SERVICE CPT-MARK & DIR LT	ITT SS	3	561111	561080
C 247					
C 248	FR JCT BOX-WIPER PULSE GEN	AMP FF	6	------	561108
C 249					
C 250					
C 251	LH SW PANEL-FAST IDLE	EATON	8	------	562763
C 252					
C 253	LH SW PANEL-ETHER	EATON	8	------	562763
C 254	INST. PANEL RH-ENTR.DOOR SW.	TORRIX	5	------	562110
C 255	LH SW PANEL-JACOB	EATON	8	------	562763
C 256					
C 257					

CONNECTORS CODE

NO	LOCATION	TYPE	CAVITY	#PIN HOUSING	#SOCKET HOUSING
C 258	LH SW PANEL-MULTI FUNC. SW	AMP FF	8	561188	------
C 259	LH SW PANEL-MULTI FUNC. SW	AMP FF	6	------	561108
C 260	FR SERVICE CPT-LUG DOOR LCK	PED WP	6	561606	561607
C 261	UNDER DASH RH-DOOR MODULE	AMP MNL	9	561670	561669
C 262	UNDER DASH RH-DOOR MODULE	AMP MNL	4	561551	561668
C 263	UNDER DASH RH-DOOR MODULE	AMP MNL	3	561667	561550
C 264	UNDER DASH RH-DOOR MODULE	AMP MNL	3	561667	561550
C 265	UNDER DASH RH-DOOR MODULE	AMP HDP-20	15	562011	562012
C 266					
C 267	UNDER DASH RH	AMP CPC	24	561642	561643
C 268	UNDER DASH LH-MIRROR	AMP MNL	6	561552	561515
C 269	UNDER DASH RH-MIRROR	AMP MNL	6	561552	561515
C 270	LH MIRROR POST	MOLEX	6	562070	562069
C 271	RH MIRROR POST	MOLEX	6	562070	562069
C 272	LH MIRROR	SPARTAN	6	------	990158
C 273	RH MIRROR	SPARTAN	6	------	990158
C 274					
C 275	UNDER DASH RH-DOOR MODULE	AMP MNL	9	561670	561669
C 276	UNDER DASH RH-LOCK SOL.VALVE	AMP MNL	2	561248	561247
C 277					
C 278					
C 279	UNDER DASH CYLINDER READ SW.	AMP MNL	2	561248	561247
C 280	LH CONSOLE-UNLOAD TAG SW.	NGR	10	------	562763
C 281					
C 282					
C 283					
C 284					
C 285					
C 286	RH SW PANEL-A/C & HEAT	EATON	8	------	562763
C 287	ENGINE COMPT-LTS SW	PED WP	2	561566	561690
C 288	RH SW PANEL-FRESH AIR	EATON	8	------	562763
C 289					
C 290					
C 291					
C 292					
C 293					
C 294					
C 295					
C 296					
C 297	INSTRUMENT PANEL RH -LTS	AMP MNL	2	560900	560898
C 298					
C 299	LH CONSOLE SW-GALLEY	EATON	8	------	562763
C 300					
C 301					
C 302					
C 303					
C 304					
C 305					
C 306					
C 307					
C 308	LH CONSOLE SW-RHEOSTAT	TC	2	561030	560997
C 309	DDEC ENGINE-ECM POWER CON.	PED MP	5	------	562345
C 310	LH CONSOLE SW-LUG. DOOR LCK	EATON	8	------	562763
C 311	LH CONSOLE SW-HOS & PAS CHIME	EATON	8	------	562763
C 312	LH CONSOLE SW-READING LTS	EATON	8	------	562763
C 313	LH CONSOLE SW-GEN & FLUOR LTS	EATON	8	------	562763
C 314	LH CONSOLE SW-FR DEST. SIGN	EATON	8	------	562763
C 315	LH CONSOLE SW-LH STORE	EATON	8	------	562763
C 316	LH CONSOLE SPARE SWITCH	EATON	8	------	562763
C 317	LH CONSOLE SW-RH STORE	EATON	8	------	562763
C 318	LH CONSOLE SW-DRV WINDOW LIFT	EATON	8	------	562763
C 319					
C 320	LH CONSOLE SW-DRIVER'S LTS	EATON	8	------	562763
C 321					
C 322	LH CONSOLE DRV WIND LIFT MOT	PED PO	2	------	561848
C 323	LH CONSOLE CRUISE CTR SW PAN. AMP	CPC	9	561636	561637
C 324					

NO	LOCATION	TYPE	CAVITY	#PIN HOUSING	#SOCKET HOUSING
C 325	LH CONSOLE SW-KNEELING	EATON	8	------	562763
C 326	LH CONSOLE SW-SPARE	EATON	8	------	562763
C 327	ENGINE CONTROL	DEUTSCH	6	562583	562581
C 328	GALLEY-LAMP	AMP MNL	2	561248	561247
C 329	ENGINE TACHO SIGNAL	PED WP	3	561781	561789
C 330					
C 331	GALLEY MICROWAVE SW	EATON	8	------	562763
C 332					
C 333	GALLEY RH CONTAINER SW	EATON	8	------	562763
C 334	GALLEY LH CONTAINER SW	EATON	8	------	562763
C 335					
C 336					
C 337	INSTR PANEL LH-UP WIPER SW	EATON	8	------	562763
C 338	INSTR PANEL LH-UP DEFROST SW	EATON	8	------	562763
C 339	INSTR PANEL LH-UP WASHER SW	EATON	8	------	562763
C 340	FR JCT. BOX FIRE PIEZO ALARM	AMP MNL	2	560900	560898
C 341	INSTR PANEL LH-HEAT MIRROR SW	EATON	8	------	562763
C 342	ENGINE RR START SW	DEUTSCH	2	562586	562585
C 343	INSTR PANEL LH-HEADLAMP SW	EATON	8	------	562763
C 344	INSTR PANEL LH-HAZARD LT SW	EATON	8	------	562763
C 345	INSTR PANEL LH-FOG LT SW	EATON	8	------	562763
C 346					
C 347	INSTR PANEL LH-DASH LT SW	AMP MNL	2	560900	560898
C 348	INSTR PANEL CENT-RACOR MODULE	MOLEX	6	562070	562067
C 349					
C 350	RH CONSOLE-THERMOMETER	AMP MNL	3	561667	561550
C 351	LH HAT RACK-FLUOR 110V	MOLEX	4	561477	561476
C 352	RH CONSOLE-DRV TEMP SENSOR	BURNDY	4	------	561104
C 353	INSTR PANEL RH-DRV FAN RHEOST	AMP MNL	6	561552	561515
C 354	INSTR PANEL RH-DRV TEMP CTR	AMP MNL	6	561552	561515
C 355	INSTR PANEL RH-FR TEMP CTR	AMP MNL	3	561667	561550
C 356					
C 357	INSTR PANEL RH-WATER TEMP GA	AMP MNL	3	561667	561550
C 358	INSTR PANEL RH-FUEL LEVEL GA	AMP MNL	3	561667	561550
C 359					
C 360					
C 361	FR ROOF-WIPER MOTOR	AMP FF	6	------	561186
C 362	FR ROOF-LAVATORY OCCUPIED LT	AMP MNL	2	561248	561247
C 363	FR ROOF-WATCH YOUR STEP LT	AMP MNL	2	561248	561247
C 364	FR ROOF-DESTINATION SIGN	AMP MNL	3	561667	561550
C 365	FR ROOF-UP WINDSHIELD DEFROST	AMP MNL	3	561667	561550
C 366	RH DASH PANEL-GRN & RED LEDS	AMP MNL	3	560908	562006
C 367	ENGINE COMPT-DIF OIL T SENSOR	PED WP	2	561566	561690
C 368	FR ROOF-DEST. SIGN BALLAST	AMP MNL	3	561667	561550
C 369	FR ROOF-DEST. SIGN OPER. SW	TORRIX	5	------	562110
C 370	FR ROOF-DEST. SIGN FLUOR.	AMP MNL	2	560900	560898
C 371	FR ROOF-DEST. SIGN FLUOR.	AMP MNL	2	560900	560898
C 372	FR ROOF-DEST. SIGN SPEED SW	MOLEX	4	561477	561476
C 373	FR ROOF-NO SMOKING LT	AMP MNL	2	561248	561247
C 374	LH SWITCH PANEL	AMP MNL	6	561552	561515
C 375					
C 376					
C 377	LH SW PANEL-STOP ENG.OVERIDE	EATON	8	------	562763
C 378					
C 379					
C 380	LH CONSOLE-DDR CONNECTOR	DEUTSCH	6	562360	------
C 381					
C 382					
C 383					
C 384					
C 385					
C 386	LH CONSOLE-WCL POWER SYSTEM	EATON	8	------	562763
C 387	RR JCT BOX (WCL)	AMP MNL	9	561661	561662
C 388	RR JCT BOX (WCL)	AMP MNL	12	561735	561734
C 389	WCL REAR DOOR	MOLEX	4	561477	561476
C 390	LAVATORY WALL-WCL REMOTE CTR	EATON	8	------	562763
C 391	LAVATORY WALL-WCL LAMP	EATON	8	------	562763

CONNECTORS CODE

NO	LOCATION	TYPE	CAVITY	#PIN HOUSING	#SOCKET HOUSING
C 392	LAVATORY WALL-WCL SW. LT.	EATON	2	------	561835
C 393	LAVATORY WALL-WCL REMOTE SYS.	AMP CPC	4	561686	561687
C 394	UNDER INSTR. PANEL- B/U MONITOR	AMP MNL	4	560851	560852
C 395	DRIVER'S COMPT. - B/U MONITOR	AMP	5	------	------
C 396	FR SECT. LH HAT RACK-SPEAKER	MOLEX	4	562507	562503
C 397	ENGINE COMPT. CRADLE ACC.	DEUTSCH	40	562281	562284
C 398					
C 399					
C 400	ENGINE COMPT. BLOCK HEATER	PED MP	3	561781	561782
C 401					
C 402	RR DRIVE AXLE-AIR DRYER	PED MP	2	------	562251
C 403	GALLEY FRIGO NORCOLD	AMP MNL	2	561248	561247
C 404	GALLEY LAMP	AMP MNL	2	561248	561247
C 405					
C 406	FR JCT BOX COMPT.-ABS	AMP MNL	2	560900	560898
C 407	ENGINE COMPT. -SIGNAL	PED WP	6	561606	561607
C 408	ENGINE COMPT. -SIGNAL	PED WP	6	561606	561607
C 409	ENGINE CPT -LOW COOL. LEVEL	PED MP	2	------	562350
C 410	FR JCT BOX-DIODE CONNECTOR	AMP MNL	15	561987	561986
C 411	FR JCT BOX-DIODE CONNECTOR	AMP MNL	15	561987	561986
C 412	LH SW PANEL-MASTER SWITCH	EATON	8	------	562763
C 413	ENG CPT-A/C HI UNLOAD PRS SW	PED WP	2	561566	561690
C 414	RR JCT BOX	AMP MNL	9	561670	561669
C 415	ENGINE CRADLE-FAN SIGNAL	PED WP	3	561781	561782
C 416	ENGINE CRADLE-FAN SIGNAL	PED P-C	3	562237	------
C 417	FRONT JCT BOX-DIODES	AMP MNL	15	561987	561986
C 418	INSTR. PANEL LH-HTR WINDSH.SW	EATON	8	------	562763
C 419	FR JCT BOX-RETARDER OR JACOB	AMP MNL	3	561667	561550
C 420	ENGINE COMPT. WEBASTO WATER HTR	TC	2	561597	------
C 421	ENGINE COMPT. WEBASTO WATER HTR	TC	1	561073	------
C 422	ENGINE COMPT. WEBASTO WATER HTR	TC	2	561597	------
C 423					
C 424	UNDER INSTRUMENT PANEL CENTER	AMP MNL	3	561667	561550
C 425	FR JCT BOX-DIODES	AMP MNL	15	561987	561986
C 426	ENGINE COMPT. CLUTCH CTR FAN	PED WP	3	561781	561782
C 427					
C 428					
C 429	FR JCT BOX COMPT.	AMP MNL	6	561552	561515
C 430	LH CONSOLE-TIMER	AMP FF	8	561188	562363
C 431	LH CONSOLE-PRE HEAT.	TAB AMP	1	561540	561539
C 432	ENGINE CPT.-PROX. SW. DOOR AJAR	DEUTSCH	4	562479	562477
C 433	FR SERVICE CPT. KNEEL. PRESS. SW	PED WP	2	561566	561690
C 434	FRONT JCT. BOX-DIODES	AMP MNL	15	561987	561986
C 435	FR SERVICE CPT.(RH) KNEEL. PIEZO	AMP MNL	2	560900	560898
C 436	RH HAT RACK-WCL CENTER ROOF ACC	AMP CPC	16	561639	561640
C 437	RH HAT RACK-WCL FR & RR SECT.	AMP CPC	24	561642	561643
C 438					
C 439					
C 440					
C 441					
C 442					
C 443					
C 444					
C 445					
C 446					
C 447					
C 448					
C 449					
C 450	SOUND SYS. JCT. PANEL	MOLEX	4	562507	562503
C 451	WIRELESS MICRO-FIRST CPT BAG	MOLEX	2	562550	562549
C 452	UNDER DASH INSTR. PANEL	MOLEX	2	562550	562549
C 453	SOUND SYS. JCT.PANEL-VCP	PED WP	2	561566	561680
C 454	SOUND SYS.JCT.PAN.-FILT. VCP	PED WP	2	561566	561680
C 455	WIRELESS MICRO-LH HAT-RACK	CINCH	2	562554	562551
C 456	WORLD TRANSM.-RETARDER ACCUM.	PED MP	2	------	562427
C 457	WORLD TRANSM.-MAIN CONNECTOR	DEUTSCH	31	562572	562536
C 458	WORLD TRANSM.-TURBINE SP.SENS	PED MP	2	------	562426

NO	LOCATION	TYPE	CAVITY	#PIN HOUSING	#SOCKET HOUSING
C 459	WORLD TRANSM.-ENGINE SP.SENS.	PED MP	2	------	562426
C 460	WORLD TRANSM.-SPEED SENSOR	ITT	2	------	562541
C 461	WORLD TRANSM.-RETARDER TEMP.	PED MP	2	561566	561680
C 462	WORLD TRANSM.-RETARD SOL."K"	PED MP	2	------	562426
C 463	WORLD TRANSM.-SENSOR CONN.	DEUTSCH	16	562570	562571
C 464	RR JCT BOX-DDR CONNECTOR	DEUTSCH	6	------	562360
C 465	LH CONSOLE-SHIFTER SELECTOR	PED	20	------	562825
C 466	FR SERVICE CPT.-RESIS. MOD.	PED WP	3	------	562428
C 467	FR SERVICE CPT.-RESIS. MOD.	PED WP	3	------	562428
C 468			8		
C 469					
C 470	FR LH UPPER WHELL CPT-SILENT 1000	AMP MNL	2	561248	561247
C 471	FR LH UPPER WHELL CPT-SILENT 1000	AMP MNL	2	561248	561247
C 472	FR LH UPPER WHELL CPT-SILENT 1000	PED WP	2	561566	561690
C 473	FR LH UPPER WHELL CPT-SILENT 1000	AMP MNL	3	561667	561550
C 474	DRIVER CPT.-TEMP. SENSOR	AMP MNL	2	561247	561248
C 475	RR JCT BOX-SPEED SIGN CONNECTOR	AMP MNL	2	561248	561247
C 475M	RR JCT BOX-SPEED SIGN MANUAL TR.	MOLEX	6	562070	562069
C 475W	RR JCT BOX-SPEED SIGN WORLD TR.	MOLEX	6	562070	562069
C 476					
C 477					
C 478	ELECTRONIC DESTINATION SIGN	AMP CPC	9	561636	561637
C 479	HVAC MODULE				
C 480	UNDER DASH LH-DR. FAN SPEED CTR. MOD	PED	4	561889	561890
C 481	UNDER DASH LH-DR. FAN SPEED CTR. MOD	PED	3	561781	561782
C 482					
C 483	FR SERVICE CPT. (NOT USED)	PED PC	2	------	562237
C 484	UNDER DASH LH.-FOOT DAMPER MOTOR	PED PC	2	------	562076
C 485	UNDER DASH LH.-DASH & DEFR. DAM.MOT.	AMP MNL	3	561667	561550
C 486					
C 487					
C 488					
C 489					
C 490					
C 491					
C 492					
C 493					
C 494					
C 495					
C 496					
C 497					
C 498					
C 499					
C 500	FR LH UPPER WHELL CPT -PRODRIVER	MOLEX	6	562070	562069
C 501	FR LH UPPER WHELL CPT -PRODRIVER	PED MP	7	562433	------
C 502	LH CONSOLE-PRE HEATER SW.	EATON	8	------	562763
C 503	LH CONSOLE-PRE HEATER SW.	EATON	2	------	561837
C 504	LH CONSOLE WEBASTO TIMER	AMP	8	------	562852
C 505	LH CONSOLE ESPAR TIMER	AMP	9	------	562681
C 506	FR JCT BOX CPT. DIGITAL CLOCK	AMP	4	561685	561687
C 507	FR SECT. LH HAT-RACK DIG. CLOCK	MOLEX	4	561477	561476
C 508	RR JCT BOX-FAN CLUTCH RETARDER	AMP MNL	6	561552	561515
C 509	FR LH UPPER WHELL CPT -DATA LOGGER	PED MP	16	------	562530
C 510	FR LH UPPER WHELL CPT -DATA LOGGER	DEUTSCH	9	562531	------
C 511	FR LH UPPER WHELL CPT -DATA LOGGER	PED MP	4	562532	------
C 512	FR LH UPPER WHELL CPT -DATA LOGGER	PED MP	10	562533	------
C 513	FR LH UPPER WHELL CPT -DATA LOGGER	AMP MNL	3	561667	561550
C 514	FR LH UPPER WHELL CPT -DATA LOGGER	PED MP	6	562433	562417
C 515	FR JCT BOX CPT.-INTERCOM	MOLEX	4	561477	561476
C 516	FR JCT BOX CPT.-INTERCOM	MOLEX	6	562070	562069
C 517	LAVATORY WALL-INTERCOM	MOLEX	6	562070	562069
C 519	UNDER DASH RH-SEDAN DOOR	HUMPHREY	2	------	562580
C 520	UNDER DASH RH-SEDAN DOOR	HUMPHREY	2	------	641385
C 521	UNDER DASH RH-SEDAN DOOR	HUMPHREY	2	------	641385
C 522	FR JCT BOX-DAYTIME LTS MODULE	BOSCH	5	------	561183
C 523	FR JCT BOX-FUSE BLOCK	PED	8	562647	562646
C 524	FR JCT BOX-FUSE BLOCK	PED	8	562647	562646

CONNECTORS CODE

NO	LOCATION	TYPE	CAVITY	#PIN HOUSING	#SOCKET HOUSING
C 525	FR JCT BOX-FUSE BLOCK	PED	8	562647	562646
C 526	FR JCT BOX-FUSE BLOCK	PED	8	562647	562646
C 527	FR JCT BOX-FUSE BLOCK	PED	8	562647	562646
C 528	FR JCT BOX-FUSE BLOCK	PED	8	562647	562646
C 529	FR JCT BOX-12V OUTLET	AMP MNL	2	561247	561248
C 530	RR JCT BOX-FUSE BLOCK	PED	8	562647	562646
C 531	RR JCT BOX-FUSE BLOCK	PED	8	562647	562646
C 532	RR JCT BOX-FUSE BLOCK	PED	8	562647	562646
C 533	RR JCT BOX-FUSE BLOCK	PED	8	562647	562646
C 534	RR JCT BOX-FUSE BLOCK	PED	8	562647	562646
C 535	RR JCT BOX-FIRE MODULE DETECT.	AMP MNL	3	561667	561550
C 536	UNDER DASH RH-DRIVER'S HTR TEMP. CTR	AMP MNL	6	561552	561515
C 537	BATT. CPT.-A/C PRESS. SIGN. RLY	AMP MNL	2	561248	561247
C 538	FR SERVICE CPT.-OUTSIDE TEMP. SENSOR	AMP MNL	2	561248	561247
C 539	HVAC DASH MODULE OUTPUT CON	MOLEX	24		562780
C 540	HVAC DASH MODULE INPUT CON	MOLEX	22		562781
C 541	SOUND SYS. JCT PANEL-AUDIO SEAT SYS.	PED WP	2	561566	561690
C 542	LH HAT RACK-AUDIO SEAT SYSTEM	AMP MNL	3	561667	561550
C 543	RR JCT BOX-PARK. BRAKE STOP LTS RESIS.	PED WP	2	561566	561690
C 544	SOUND SYS JCT PANEL-AUDIO SEAT SYS.	PED WP	3	561781	562428
C 545	LH HAT RACK-AUDIO SEAT SYSTEM	AMP MNL	3	561667	561550
C 546					
C 547	RH DASH PANEL-ACCESSORIES	AMP CPC	37	561645	561646
C 548	LH DASH PANEL-T.T. LT. TEST SW.	EATON	8	------	562763
C 549	LH CONSOLE-FAN CLUTCH OVERRIDE SW.	EATON	8	------	562763
C 550	LAST LUGG. CPT. -WCL RICON	AMP CPC	16	561694	561695
C 551	LAST LUGG. CPT. -WCL RICON	AMP CPC	16	561694	561695
C 552	LAST LUGG. CPT. -WCL RICON	AMP CPC	9	561636	561637
C 553	UNDER DASH R.H. - CONTROL. HEAD	MOLEX	16	---------	562559
C 554	UNDER DASH R.H. - CONTROL. HEAD	MOLEX	16	---------	562559
C 555	UNDER DASH R.H. - CONTROL. HEAD	MOLEX	16	---------	562559
C 556	UNDER DASH R.H. - RADIO ACC.	MOLEX	2	562550	562549
C 557	UNDER DASH R.H. - RADIO ACC.	MOLEX	9	562556	562555
C 558	UNDER DASH R.H. - RADIO ACC.	MOLEX	4	562507	562503
C 559	L.H. HAT RACK - PASSENGER SPK.	MOLEX	4	562507	562503
C 560	SOUND SYS. JCT. PANEL - POWER AMPLI	MOLEX	4	562507	562503
C 561	L.H. HAT RACK - WIRELESS MICRO	MOLEX	4	562507	562503
C 562	L.H. HAT RACK - VCP	MOLEX	9	562556	562555
C 563	L.H MODESTY PANEL - DRIVERS SPK.	MOLEX	4	562507	562503
C 564	L.H MODESTY PANEL - MICRO	MOLEX	4	562507	562503
C 565	R.H MODESTY PANEL - MICRO	MOLEX	4	562507	562503
C 566	L.H. CONSOLE - BOOM MICRO	MOLEX	4	562507	562503
C 567	L.H. CONSOLE - DRIVERS MICRO	MOLEX	4	562507	562503
C 568	SOUND SYS. JCT. PANEL - PASS. SPK	CINCH	4	562553	562552
C 569	SOUND SYS. JCT. PANEL - POWER AMPLI.	MOLEX	9	562556	562555
C 570	UNDER DASH PANEL TTLT	MOLEX	6		562464
C 571	UNDER DASH PANEL TTLT	MOLEX	20		562778
C 572	UNDER DASH PANEL TTLT	MOLEX	18		562779
C 573	UNDER DASH PANEL TTLT	MOLEX	16		562465
C 574	HAT -RACK FLUOR. INDIRECT LIGHTING	MOLEX	6	----------	562759
C 575	HAT -RACK FLUOR. INSTATION LIGHT	MOLEX	4	562507	562503
C 576	HAT -RACK FLUOR. INDIRECT LIGHTING	AMP MNL	3	561667	561550
C 577	HAT -RACK FLUOR. INDIRECT LIGHTING	AMP MNL	3	561667	561550
C 578	HAT -RACK FLUOR. INSTATION LIGHT	MOLEX	4	562507	562503
C 579					
C 580					
C 581					
C 582	FRONT SERVICE CMPT. - WINDOWS AJAR	PED WP	2	561566	561690
C 583	L.H. DASH PANEL - MASTER KEY	DEUTSCH	2	562486	562485
C 584	FRONT SERVICE CMPT. - AIR HORH	HUMPHREY	3	--------	641385
C 585					
C 586					
C 587					
C 588	FRONT SERVICE CPT. CENTER SOUND SYS.	AMP. CPC	37	561645	561646
C 589	UNDER DASH - L.H. MIRROR	AMP MNL	9	561670	561669
C 590	UNDER DASH - R.H. MIRROR	AMP MNL	9	561670	561669
C 591	L.H.CONSOLE - MIRROR L.H.	EURAMTEC	8	--------	562799

NO	LOCATION	TYPE	CAVITY	#PIN HOUSING	#SOCKET HOUSING
C 592	L.H.CONSOLE - MIRROR R.H.	EURAMTEC	8	--------	562799
C 593	BATTERY CMPT. - CHARGER	PED WP	3	561781	561782
C 594	FRONT ROOF - DRIVERS LIGHT	LEEKRAFT		---------	562803
C 595	DASH CENTER MODULE - OPEN DOOR	MOLEX	4	561477	561476
C 596	DASH CENTER MODULE - CLOSE DOOR	MOLEX	4	561477	561476
C 597	L.H. DASH PANEL - DISPLAY SET SW.	MOLEX	5		562812
C 598	L.H. DASH PANEL - DISPLAY SET SW.	MOLEX	5		562812
C 599					
C 600	ENGINE CPT.-A/C LOW PRESS SW. UNLOAD	PED	2	562348	562471
C 601	L.H. ROOF - WINDOW AJAR	AMP MNL	2	561248	561247
C 602	L.H. ROOF - WINDOW AJAR	MOLEX	4	561477	561476
C 603	R.H. ROOF - WINDOW AJAR	AMP MNL	2	561248	561247
C 604					
C 605	HAT RACK - MOTOR FAN	PED	2	560997	561030
C 606	HAT RACK - MOTOR FAN	PED	2	560997	561030
C 607	FRONT SERVICE CMPT. RPM SIGNAL	PED WP	2	561566	561690
C 608	FRONT SERVICE CMPT. SPEED SIGNAL	PED WP	2	561566	561690
C 609	LAVATORY - NIGHT LIGHT				
C 610	RR JCT BOX	AMP MNL	6	561552	561515
C 611	HAT RACK READING LTS RICON	MOLEX	6	562558	562557
C 612	HAT -RACK FLUOR. INSTATION LTS RICON	MOLEX	4	562507	562503
C 613	HAT -RACK INDIRECT LTS RICON	AMP MNL	3	561667	561550
C 614	HAT -RACK INDIRECT LTS RICON	AMP MNL	3	561667	561550
C 615					
C 616					
L X	CLUSTER	JAE	22		562766
L Y	CLUSTER	JAE	30		562767
R X	CLUSTER	JAE	22		562764

CONNECTORS CODE

NO	LOCATION	TYPE	CAVITY	#PIN HOUSING	#SOCKET HOUSING
C AA1	BEHIND DASH - SONALERT	BOSCH	5		561183
C AA2	BEHIND DASH - SONALERT	BOSCH	5		561183
C X1	FR LH UPPER WHELL CPT-ABS	WABCO	18		562792
C X2	FR LH UPPER WHELL CPT-ABS	WABCO	6		562793
C X3	FR LH UPPER WHELL CPT-ABS	WABCO	9		562794
C X4	FR LH UPPER WHELL CPT-ABS	WABCO	15		562795`
C S	RR JCT BOX ECU WORLD TR.	PED	32		562817
C T	RR JCT BOX ECU WORLD TR.	PED	32		562824
C V	RR JCT BOX ECU WORLD TR.	PED	32		562823
CV I2	RR JCT BOX-WORLD TRANSM. & EATON	AMP CPC	9	561636	561637
C Y	CLUSTER	JAE	30		562765
C 1	FR JCT BOX COMPARTMENT	AMP CPC	14	561585	561584
C 2	FR JCT BOX COMPARTMENT	AMP CPC	16	561639	561640
C 3	FR JCT BOX COMPARTMENT	AMP CPC	24	561641	561643
C 4	FR JCT BOX COMPARTMENT	AMP CPC	37	561644	561646
C 5	FR SERVICE COMPT.-UNDERNEATH	AMP CPC	37	561644	561646
C 6	FR SERVICE COMPT.-UNDERNEATH	AMP CPC	16	561639	561640
C 7					
C 8	FR SERVICE COMPT.-UNDERNEATH	AMP CPC	24	561641	561643
C 9	FR SERVICE COMPT.-UNDERNEATH	AMP CPC	24	561641	561643
C 10					
C 11	FR SERVICE COMPARTMENT	AMP CPC	37	561644	561646
C 12	FR SERVICE COMPARTMENT	AMP CPC	16	561639	561640
C 13	LH CONSOLE-CTR MIRROR	AMP MNL	6	561552	561515
C 14	UNDER DASH-LH MIRROR	AMP MNL	9	561661	561662
C 15	RR JCT BOX	AMP CPC	24	561641	561643
C 16	LH CONSOLE SW-CRUISE ON OFF	EATON	10	------	562763
C 17	LH CONSOLE SW-CRUISE RESUME	EATON	10	------	562763
C 18	LH CONSOLE SW-CRUISE SET	EATON	10	------	562763
C 19	LH CONSOLE DECEL SW	EATON	10	------	562763
C 20	RR JCT BOX	AMP CPC	37	561644	561646
C 21	RR JCT BOX	AMP CPC	24	561641	561643
C 22	RR JCT BOX - EATON TRANSM.	AMP MNL	6	561552	561515
C 23	DDEC ENGINE-ECM J1939	PED MP	6	-------	561962
C 24	DDEC ENGINE	PED WP	1	561605	561577
C 25	RR JCT BOX - EATON TRANSM. J1939	DEUTCH	3	562877	562884
C 26	HYD & MAN TRANSM.-NEUT.& B/U	PED WP	4	561610	561611
C 27	HYD & MAN TRANSM.-SPEED SENS.	PED WP	2	561566	561690
C 28	EATON TRANSMISSION	DEUTCH	3	562877	562884
C 29	EATON TRANSMISSION	PED MP	6	562878	------
C 30	RR JCT BOX - ECU EATON TRANSM.	PED MP	32	------	562866
C 31	RR JCT BOX - ECU EATON TRANSM.	PED MP	24	------	562865
C 32	DDEC ENGINE-ECM	PED	30	------	561600
C 33	RR JCT BOX - EATON TRANSM.	DEUTCH	9	562531	------
C 34	RH. CONSOLE - EATON TRANSM. SHIFTER	PED MP	3	------	562871
C 35	RR JCT BOX	AMP CPC	24	561642	561643
C 36	RH. CONSOLE - EATON TRANSM. SHIFTER	PED MP	24	------	562874
C 37	RR SECTION-LH HAT RACK	MOLEX	6	562558	562557
C 38	RR SECTION-RH HAT RACK	MOLEX	6	562558	562557
C 39	LH CONSOLE - EATON TRANSM. DISPLAY	AMP MNL	4	561551	561668
C 40	RR JCT BOX - EATON TRANSM. J1939	DEUTCH	3	562877	562884
C 41	LAVATORY ROOF FLUORESCENT	AMP MNL	2	560900	560898
C 42	LAVATORY BACK WALL-WTR TANK	AMP MNL	2	560900	560898
C 43	LAVATORY BACK WALL-ACCES.	AMP MNL	9	561661	561662
C 44	EATON TRANSM. J1939	DEUTCH	3	562877	562884
C 45	FR JCT BOX COMPARTMENT	AMP CPC	24	561642	561643
C 46	EATON TRANSM. J1939	DEUTCH	3	562877	562884
C 47	FR SERVICE COMPARTMENT	AMP CPC	16	561694	561695
C 48					
C 49	BATTERIE COMPT.-LT	AMP MNL	2	561248	561247
C 50	FR SERVICE COMPT.-LOW BUOY	PED WP	1	561605	561577
C 51					
C 52	RR JCT BOX	AMP CPC	22	561709	561710
C 53					
C 54					
C 55	RH SWITCH PANEL	AMP CPC	9	561636	561637
C 56					

NO	LOCATION	TYPE	CAVITY	#PIN HOUSING	#SOCKET HOUSING
C 57					
C 58	RR JCT BOX AC PANEL	DEUTSCH	24	562280	562283
C 59	RR JCT BOX AC PANEL	AMP CPC	14	561584	561583
C 60	RR JCT BOX COMPT.-LT	AMP MNL	2	561248	561247
C 61	LUGGAGE COMPARTMENT LTS	AMP MNL	2	561248	561247
C 62	LUGGAGE COMPARTMENT LTS	AMP MNL	2	561248	561247
C 63	LUGGAGE COMPARTMENT LTS	AMP MNL	2	561248	561247
C 64	LUGGAGE COMPARTMENT LTS	AMP MNL	2	561248	561247
C 65	LUGGAGE COMPARTMENT LTS	AMP MNL	2	561248	561247
C 66	LUGGAGE COMPARTMENT LTS	AMP MNL	2	561248	561247
C 67	LUGGAGE COMPARTMENT LTS	AMP MNL	2	561248	561247
C 68	LUGGAGE COMPARTMENT LTS	AMP MNL	2	561248	561247
C 69	RR AXLE ACC-INSIDE PVC END	PED WP	6	561568	561578
C 70	LH CONSOLE	AMP CPC	16	561642	561643
C 71	FR JCT BOX COMPARTMENT	AMP CPC	37	561645	561646
C 72	FR JCT BOX COMPARTMENT	AMP CPC	24	561642	561643
C 73	DASH CENTER PANEL	AMP CPC	16	561639	561640
C 74	FR JCT BOX COMPARTMENT	AMP CPC	37	561645	561646
C 75					
C 76	LUGGAGE COMPT.-AIR RET.SENS.	AMP MNL	2	561248	561247
C 77	LUGGAGE COMPT.-AIR RET.SENS.	AMP MNL	2	561248	561247
C 78					
C 79					
C 80	LUGGAGE COMPT.-AIR RET.SENS.	AMP MNL	2	561248	561247
C 81	PASSENGER COMPT.-AISLE LTS	AMP MNL	2	560900	560898
C 82	ENTRANCE DOOR	MOLEX	6	562070	562069
C 83	ENTRANCE DOOR-PROIMITY SW	MOLEX	4	561477	561476
C 84	ENTRANCE DOOR-PRESSURE SW	PED WP	2	561566	561690
C 85	UNDER INSTRUMENT PANEL LH	AMP MTA-100	------	562248	------
C 86					
C 87	RR END ROOF	AMP CPC	9	561636	561637
C 88	RR END ROOF-CLEARANCE LTS	AMP MNL	2	560900	560898
C 89	RR END ROOF-B/U NONITOR	AMP CPC	4	561582	561581
C 90	RR JCT BOX	AMP CPC	15	561987	561986
C 91	RR JCT BOX	AMP CPC	37	561714	561713
C 92	FR LH UPPER WHELL CPT-ABS	AMP CPC	9	561635	561637
C 93	FR LH UPPER WHELL CPT-ABS		35	------	641094
C 94					
C 95	CONDENSOR CPT - LIQ. SOL. VALVE	PED WP	2	561566	561690
C 96	FR AXLE ACCESSORIES	AMP CPC	14	561585	561585
C 97	RR AXLE ACC-INSIDE PVC END	PED WP	6	561568	561578
C 98	FR SERVICE COMPT-EL.FT.PEDAL	PED WP	3	561782	561781
C 99	FR SERVICE COMPT LTS	AMP MNL	2	561248	561247
C 100					
C 101	FR SERVICE COMPT-ELEC. HORNS	PED WP	2	561566	561690
C 102	FR SERV & SIDE CPT-FLASH. LH	GROTE	2	------	562155
C 103	FR SERV & SIDE CPT-MARKERS	GROTE	2	------	562155
C 104	FR SERV & SIDE CPT-FLASH. RH	GROTE	2	------	562155
C 105	FR SERVICE COMPT-LIQ.S.VALVE	PED WP	2	561566	561690
C 106	FR SERVICE COMPT-WATER VALVE	PED WP	2	561566	561690
C 107	EVAPORATOR COMPT-DAMPER	PED WP	2	561566	561690
C 108	FR SERVICE COMPT-KNEEL.SYS	PED WP	2	561566	561690
C 109	FR SERVICE COMPT-KNEEL.SYS	PED WP	2	561566	561690
C 110	FR SERVICE COMPT-KNEEL.SYS	PED WP	2	561566	561690
C 111	EVAPORATOR COMPT-DAMPER	DEUTSCH	2	562486	562485
C 112	EVAPORATOR COMPT-SPEED MOT CTRL	DEUTSCH	5	------	562566
C 113	BATT. & RR J.B.CPT.MARKER LT	GROTE	2	------	562155
C 114	RR J. BOX CPT DOOR DIR LT LH	GROTE	2	------	562155
C 115	ENGINE COMPT-AIR DRYER	PED WP	2	561566	561690
C 116	ENGINE COMPT. LTS	PED WP	1	561605	561577
C 117					
C 118	ENGINE COMPT-LAVATORY FAN	PED WP	2	561566	561690
C 119	ENGINE CPT RR DOOR RH LO LAMP	PED WP	6	561606	561607
C 120	ENGINE CPT RR DOOR LH LO LAMP	PED WP	6	561606	561607
C 121	BATTERIE CPT. DOOR DIR LT RH	GROTE	2	------	562155
C 122	ENGINE CPT-UNLOAD TAG SYSTEM	PED WP	2	561566	561690
C 123	TAG AXLE-UNLOAD TAG RH VALVE	PED WP	2	561566	561690

CONNECTORS CODE

NO	LOCATION	TYPE	CAVITY	#PIN HOUSING	#SOCKET HOUSING
C 124	ENGINE CPT-ETHER SW	PED WP	2	561566	561690
C 125	ENGINE CPT-B/U ALARM	PED WP	2	561566	561690
C 126	ENGINE CPT-FLUSHING PUMP	PED WP	2	561566	561690
C 127	ENGINE CPT-FUEL FILTER	PED WP	2	561566	561690
C 128	ENGINE CPT-A/C COMPR.CLUTCH	ITT SS	2	561813	561812
C 129	ENGINE CPT-PRE-HEAT WATER	AMP FF	6	561672	561186
C 130	ENGINE CPT-UNLOADER	ITT SS	2	561813	561812
C 131	ENGINE CPT-UNLOADER	ITT SS	2	561813	561812
C 132	ENGINE CPT-A/C LO PRESS SW	PED WP	2	561566	561690
C 133	ENGINE CPT-A/C HI PRESS SW	PED WP	2	561566	561690
C 134	FR JCT BOX-LUGGAGE DIODE CON.	AMP MNL	15	561987	561986
C 135	FR JCT BOX-LUGGAGE DIODE CON.	AMP MNL	15	561987	561986
C 136	RR JCT BOX - A/C PANEL DIODE CONN.	AMP MNL	15	561987	561986
C 137	RR JCT BOX-TRANSMITTER	AMP MNL	2	560900	560898
C 138	RR JCT BOX-CONTROL MODULE	AMP HDP	15	------	562012
C 139	RR JCT BOX-LOGIC MODULE	AMP HDP	15	562011	------
C 140	HVAC DASH MODULE THERMOMETER	MOLEX	4		562782
C 141	INSTRUMENT PANEL LH UNLOAD TAG	AMP	2	561248	561247
C 142	LAVATORY DOOR WALL	AMP MNL	2	561248	561247
C 143	LAVATORY DOOR WALL	AMP MNL	3	560908	562006
C 144	UNDER LH SEAT-AISLE LTS	AMP MNL	4	560851	560852
C 145	RR JCT BOX CPT-RR SIDE LTS	AMP MNL	9	561670	561669
C 146	ENGINE CPT-MODULATOR VALVE	AMPHENOL	2	------	560412
C 147	BATT & RR J.B.CPT-DOCK.LTS	PED WP	2	561566	561690
C 148					
C 149	CONDENSER CPT-FAN MOTOR	ORDNANCE	3	562555	562001
C 150					
C 151	EVAPORATOR CPT-THERMOSTAT	ITT SS	2	561813	562159
C 152	CONDENSER CPT-FUEL GAUGE	PED WP	4	561610	561611
C 153	EVAPORATOR CPT-AIR AMB. SENS	AMP MNL	2	561248	561247
C 154	EVAPORATOR CPT-FRESH AIR SENS	ITT SS	2	561813	561812
C 155	EVAPORATOR CPT-WATER VALVE	PED WP	4	561610	561611
C 156	EVAPOR. CPT-BYPASS WATER VAL.	PED WP	2	561566	561690
C 157	EVAPORATOR CPT-WATER PUMP	PED WP	2	561566	561690
C 158	CONDENSER CPT-A/C LO TEMP.	PED WP	2	561566	561690
C 159	CONDENSER CPT-A/C HI TEMP.	PED WP	2	561566	561690
C 160	FR AXLE-ABS RH SENSOR	WABCO	2	641132	------
C 161	FR AXLE-ABS RH VALVE	WABCO	3	------	641098
C 162	FR AXLE-ABS LH VALVE	WABCO	3	------	641098
C 163	FR AXLE-ABS LH SENSOR	WABCO	2	641132	------
C 164	RR AXLE-ABS LH SENSOR	DEUTSCH	2	562486	562485
C 165	RR AXLE-ABS LH VALVE	WABCO	3	------	641098
C 166	RR AXLE-ABS RH VALVE	WABCO	3	------	641098
C 167	RR AXLE-ABS RH SENSOR	DEUTSCH	2	562486	562485
C 168	RR AXLE-ABS OPT ATC	PED WP	2	561566	561690
C 169	RR JCT BOX-SPEED SW	AMP HDP	15	------	562012
C 170	FR JCT BOX-FLASHER UNIT	TC	2	------	561940
C 171	LH CONSOLE	AMP CPC	24	561642	561643
C 172	ENGINE COMPT-WATER TANK HEAT.	PED WP	2	561566	561690
C 173	LAV.POTABLE-WATER TANK HEAT.	AMP MNL	2	560900	560898
C 174	UNDER DASH RH-HTR MODULE	AMP MNL	9	561670	561669
C 175	UNDER DASH RH-HTR MODULE	AMP MNL	9	561670	561669
C 176	UNDER DASH RH-WIPER PULSE	AMP FF	6	------	561186
C 177	UNDER DASH RH-WIPER MOTOR	AMP FF	6	------	561186
C 178	UNDER DASH RH-LH FAN	TC	2	561030	560997
C 179	UNDER DASH RH-RH FAN	TC	2	561030	560997
C 180	RR JCT BOX-DIODE CONNECTOR	AMP MNL	15	561987	561986
C 181	RR JCT BOX-DIODE CONNECTOR	AMP MNL	15	561987	561986
C 182					
C 183	FR SERVICE CPT-KNEELING PAN.	PED WP	4	561610	561611
C 184	FR SERVICE CPT-KNEELING SW	ITT SS	3	561111	561080
C 185					
C 186	RR JCT BOX CPT.-SPEED SIGN.TR	PED WP	2	561566	561690
C 186M	RR JCT BOX CPT.-SPD SIGN. M.TR	PED WP	2	561566	561690
C 186W	RR JCT BOX CPT.-SPD SIGN. WT	PED WP	2	561566	561690
C 187	FR JCT BOX-RPM RESISTOR CON.	AMP MNL	6	561552	561515
C 188					

NO	LOCATION	TYPE	CAVITY	#PIN HOUSING	#SOCKET HOUSING
C 189	ENGINE CPT RR DOOR B/U LT	PED WP	2	561566	561690
C 190	ENGINE CPT RR DOOR TAIL LT	PED WP	2	561566	561690
C 191	ENGINE CPT RR DOOR RH STOP LT	PED WP	2	561566	561690
C 192	ENGINE CPT RR DOOR RH DIR. LT	PED WP	2	561566	561690
C 193					
C 194	ENGINE CPT RR DOOR LH DIR. LT	PED WP	2	561566	561690
C 195	ENGINE CPT RR DOOR LH STOP LT	PED WP	2	561566	561690
C 196	ENGINE CPT RR DOOR CYCLOP LT	PED WP	2	561566	561690
C 199	ENGINE CPT RR DOOR LICENCE LT	DOM AUTO	2	930210	------
C 200	RH HAT RACK-FLUORESCENT	AMP MNL	2	561248	561247
C 201	RH HAT RACK-FLUORESCENT	AMP MNL	2	561248	561247
C 202	RH HAT RACK-INDIRECT LIGHTING	MOLEX	2	--------	562758
C 203	RH HAT RACK-INDIRECT LIGHTING	MOLEX	6	--------	562759
C 204	RH HAT RACK-GENERAL LT	AMP MNL	2	560900	560898
C 205	FR SECT.-RH HAT RACK SPEAKER	AMP MNL	9	561661	561662
C 206	RH HAT RACK-READING LT	AMP FF	4	----------	562756
C 207	LH HAT RACK-READING LT	AMP FF	4	----------	562756
C 208	LH HAT RACK-BALLAST	MOLEX	2	----------	562758
C 209	LH HAT RACK HOTESS CHIME	AMP MNL	3	561667	561550
C 210	FR SECT.-LH HAT RACK SPEAKER	AMP MNL	9	561661	561662
C 211	FR ROOF-STORE LH	AMP MNL	2	560900	560898
C 212	FR ROOF-STORE RH	AMP MNL	2	560900	560898
C 213	FR ROOF-CLEARANCE LT	AMP MNL	2	560900	560898
C 214	ENGINE CPT J1922				
C 215	TAG AXLE - A.T.C. SYSTEM				
C 216	TAG AXLE - A.T.C. SYSTEM				
C 217	RH DASH PANEL-FRONT CAMERA SW	EATON	8	--------	562763
C 218	RH DASH PANEL-FRONT CAMERA SW	AMP MNL	2	560900	560898
C 219					
C 220	RR.JCT.BOX-FUEL PRIME PUMP	TC	1	561070	561073
C 221					
C 222					
C 223					
C 224					
C 225					
C 226					
C 227					
C 228					
C 229					
C 230	ENG.CPT.-FUEL PRIME PUMP FEED	DEUTSCH	2	562486	562485
C 231	ENG.CPT.-FUEL PRIME PUMP SW.	PED WP	2	561566	561690
C 232	ENG.CPT.-FUEL PRIME PUMP	PED WP	2	561566	561690
C 233	FR. SERVICE COMPT.	VDO	8		562043
C 234	FR. SERVICE COMPT.	VDO	8		562044
C 235	FR. SERVICE COMPT.	VDO	8		562041
C 236	LUGGAGE COMPARTEMENT	AMP MNL	4	560851	560852
C 237	UNDER DASH LH-JACOB CLUTCH SW	ITT SS	3	561111	561080
C 238	RR JCT BOX-DIODE CONNECTOR	AMP MNL	9	561670	561669
C 239	FR SERVICE CPT-HI BUOY VALVE	PED WP	2	561566	561690
C 240	FR SERVICE CPT-KNEEL PROX SW	PED WP	2	561566	561690
C 241					
C 242	FR SERVICE CPT-MARK & DIR LT	ITT SS	3	561111	561080
C 243	FR SERVICE CPT-HEADLAMPS	TC	3	------	561071
C 244	FR SERVICE CPT-LH FOG LAMP	ITT SS	2	561813	561812
C 245	FR SERVICE CPT-RH FOG LAMP	ITT SS	2	561813	561812
C 246	FR SERVICE CPT-MARK & DIR LT	ITT SS	3	561111	561080
C 247					
C 248	FR JCT BOX-WIPER PULSE GEN	AMP FF	6	------	561108
C 249					
C 250					
C 251	LH DASH PANEL-FAST IDLE SW	EATON	8	------	562763
C 252					
C 253	LH DASH PANEL-ETHER SW	EATON	8	------	562763
C 254	INST. PANEL RH-ENTR.DOOR SW.	TORRIX	5	------	562110
C 255	LH DASH PANEL-JACOB & RETARDER SW	EATON	8	------	562763
C 256					
C 257					

CONNECTORS CODE

NO	LOCATION	TYPE	CAVITY	#PIN HOUSING	#SOCKET HOUSING
C 258	LH SW PANEL-MULTI FUNC. SW	AMP FF	8	561188	------
C 259	LH SW PANEL-MULTI FUNC. SW	AMP FF	6	------	561108
C 260	FR SERVICE CPT-LUG DOOR LCK	PED WP	6	561606	561607
C 261	UNDER DASH RH-DOOR MODULE	AMP MNL	9	561670	561669
C 262	UNDER DASH RH-DOOR MODULE	AMP MNL	4	561551	561668
C 263	UNDER DASH RH-DOOR MODULE	AMP MNL	3	561667	561550
C 264	UNDER DASH RH-DOOR MODULE	AMP MNL	3	561667	561550
C 265	UNDER DASH RH-DOOR MODULE	AMP HDP-20	15	562011	562012
C 266					
C 267	UNDER DASH RH	AMP CPC	24	561642	561643
C 268	UNDER DASH LH-MIRROR	AMP MNL	6	561552	561515
C 269	UNDER DASH RH-MIRROR	AMP MNL	6	561552	561515
C 270	LH MIRROR POST	MOLEX	6	562070	562069
C 271	RH MIRROR POST	MOLEX	6	562070	562069
C 272	LH MIRROR	SPARTAN	6	------	990158
C 273	RH MIRROR	SPARTAN	6	------	990158
C 274					
C 275	UNDER DASH RH-DOOR MODULE	AMP MNL	9	561670	561669
C 276	UNDER DASH RH-LOCK SOL.VALVE	AMP MNL	2	561248	561247
C 277					
C 278					
C 279	UNDER DASH CYLINDER READ SW.	AMP MNL	2	561248	561247
C 280	LH CONSOLE-UNLOAD TAG SW.	NGR	10	------	562763
C 281					
C 282					
C 283					
C 284					
C 285					
C 286	RH SW PANEL-A/C & HEAT	EATON	8	------	562763
C 287	ENGINE COMPT-LTS SW	PED WP	2	561566	561690
C 288	RH SW PANEL-FRESH AIR	EATON	8	------	562763
C 289					
C 290					
C 291					
C 292					
C 293					
C 294					
C 295					
C 296					
C 297	INSTRUMENT PANEL RH -LTS	AMP MNL	2	560900	560898
C 298					
C 299	RH DASH PANEL SW-GALLEY	EATON	8	------	562763
C 300					
C 301					
C 302					
C 303					
C 304					
C 305					
C 306					
C 307					
C 308	LH CONSOLE SW-RHEOSTAT	TC	2	561030	560997
C 309	DDEC ENGINE-ECM POWER CON.	PED MP	5	------	562345
C 310	LH DASH PANEL -LUG. DOOR LCK SW	EATON	8	------	562763
C 311	RH DASH PANEL -HOS & PAS CHIME SW	EATON	8	------	562763
C 312	RH DASH PANEL -READING LTS SW	EATON	8	------	562763
C 313	RH DASH PANEL -GEN & FLUOR LTS SW	EATON	8	------	562763
C 314	LH DASH PANEL-FR DEST. SIGN SW	EATON	8	------	562763
C 315	LH DASH PANEL-LH STORE SW	EATON	8	------	562763
C 316	LH CONSOLE SPARE SWITCH	EATON	8	------	562763
C 317	LH DASH PANEL-RH STORE SW	EATON	8	------	562763
C 318	LH CONSOLE SW-DRV WINDOW LIFT	EATON	8	------	562763
C 319					
C 320	RH DASH PANEL-DRIVER'S LTS SW	EATON	8	------	562763
C 321					
C 322	LH CONSOLE DRV WIND LIFT MOT	PED PO	2	------	561848
C 323	LH CONSOLE CRUISE CTR SW PAN. AMP	CPC	9	561636	561637
C 324					

NO	LOCATION	TYPE	CAVITY	#PIN HOUSING	#SOCKET HOUSING
C 325	LH DASH PANEL-KNEELING SW	EATON	8	------	562763
C 326	LH CONSOLE SW-SPARE	EATON	8	------	562763
C 327	ENGINE CONTROL	DEUTSCH	6	562583	562581
C 328	GALLEY-LAMP	AMP MNL	2	561248	561247
C 329	ENGINE TACHO SIGNAL	PED WP	3	561781	561789
C 330					
C 331	GALLEY MICROWAVE SW	EATON	8	------	562763
C 332					
C 333	GALLEY RH CONTAINER SW	EATON	8	------	562763
C 334	GALLEY LH CONTAINER SW	EATON	8	------	562763
C 335					
C 336					
C 337	INSTR PANEL LH-UP WIPER SW	EATON	8	------	562763
C 338	INSTR PANEL LH-UP DEFROST SW	EATON	8	------	562763
C 339	INSTR PANEL LH-UP WASHER SW	EATON	8	------	562763
C 340	FR JCT. BOX FIRE PIEZO ALARM	AMP MNL	2	560900	560898
C 341	INSTR PANEL LH-HEAT MIRROR SW	EATON	8	------	562763
C 342	ENGINE RR START SW	DEUTSCH	2	562586	562585
C 343	INSTR PANEL LH-HEADLAMP SW	EATON	8	------	562763
C 344	INSTR PANEL LH-HAZARD LT SW	EATON	8	------	562763
C 345	INSTR PANEL LH-FOG LT SW	EATON	8	------	562763
C 346					
C 347	INSTR PANEL LH-DASH LT SW	AMP MNL	2	560900	560898
C 348	INSTR PANEL CENT-RACOR MODULE	MOLEX	6	562070	562067
C 349					
C 350	RH CONSOLE-THERMOMETER	AMP MNL	3	561667	561550
C 351	LH HAT RACK-FLUOR 110V	MOLEX	4	561477	561476
C 352	RH CONSOLE-DRV TEMP SENSOR	BURNDY	4	------	561104
C 353	INSTR PANEL RH-DRV FAN RHEOST	AMP MNL	6	561552	561515
C 354	INSTR PANEL RH-DRV TEMP CTR	AMP MNL	6	561552	561515
C 355	INSTR PANEL RH-FR TEMP CTR	AMP MNL	3	561667	561550
C 356					
C 357	INSTR PANEL RH-WATER TEMP GA	AMP MNL	3	561667	561550
C 358	INSTR PANEL RH-FUEL LEVEL GA	AMP MNL	3	561667	561550
C 359					
C 360					
C 361	FR ROOF-WIPER MOTOR	AMP FF	6	------	561186
C 362	FR ROOF-LAVATORY OCCUPIED LT	AMP MNL	2	561248	561247
C 363	FR ROOF-WATCH YOUR STEP LT	AMP MNL	2	561248	561247
C 364	FR ROOF-DESTINATION SIGN	AMP MNL	3	561667	561550
C 365	FR ROOF-UP WINDSHIELD DEFROST	AMP MNL	3	561667	561550
C 366	RH DASH PANEL-GRN & RED LEDS	AMP MNL	3	560908	562006
C 367	ENGINE COMPT-DIF OIL T SENSOR	PED WP	2	561566	561690
C 368	FR ROOF-DEST. SIGN BALLAST	AMP MNL	3	561667	561550
C 369	FR ROOF-DEST. SIGN OPER. SW	TORRIX	5	------	562110
C 370	FR ROOF-DEST. SIGN FLUOR.	AMP MNL	2	560900	560898
C 371	FR ROOF-DEST. SIGN FLUOR.	AMP MNL	2	560900	560898
C 372	FR ROOF-DEST. SIGN SPEED SW	MOLEX	4	561477	561476
C 373	FR ROOF-NO SMOKING LT	AMP MNL	2	561248	561247
C 374	LH SWITCH PANEL	AMP MNL	6	561552	561515
C 375					
C 376					
C 377	LH DASH PANEL-STOP ENG.OVERIDE SW	EATON	8	------	562763
C 378					
C 379					
C 380	LH CONSOLE-DDR CONNECTOR	DEUTSCH	6	562360	------
C 381					
C 382					
C 383					
C 384					
C 385					
C 386	LH DASH PANEL-WCL POWER SYSTEM SW	EATON	8	------	562763
C 387	RR JCT BOX (WCL)	AMP MNL	9	561661	561662
C 388	RR JCT BOX (WCL)	AMP MNL	12	561735	561734
C 389	WCL REAR DOOR	MOLEX	4	561477	561476
C 390	LAVATORY WALL-WCL REMOTE CTR	EATON	8	------	562763
C 391	LAVATORY WALL-WCL LAMP	EATON	8	------	562763

CONNECTORS CODE

NO	LOCATION	TYPE	CAVITY	#PIN HOUSING	#SOCKET HOUSING
C 392	LAVATORY WALL-WCL SW. LT.	EATON	2	------	561835
C 393	LAVATORY WALL-WCL REMOTE SYS.	AMP CPC	4	561686	561687
C 394	UNDER INSTR. PANEL- B/U MONITOR	AMP MNL	4	560851	560852
C 395	DRIVER'S COMPT. - B/U MONITOR	AMP	5	------	------
C 396	FR SECT. LH HAT RACK-SPEAKER	MOLEX	4	562507	562503
C 397	ENGINE COMPT. CRADLE ACC.	DEUTSCH	40	562281	562284
C 398					
C 399					
C 400	ENGINE COMPT. BLOCK HEATER	PED MP	3	561781	561782
C 401					
C 402	RR DRIVE AXLE-AIR DRYER	PED MP	2	------	562251
C 403	GALLEY FRIGO NORCOLD	AMP MNL	2	561248	561247
C 404	GALLEY LAMP	AMP MNL	2	561248	561247
C 405					
C 406	FR JCT BOX COMPT.-ABS	AMP MNL	2	560900	560898
C 407	ENGINE COMPT. -SIGNAL	PED WP	6	561606	561607
C 408	ENGINE COMPT. -SIGNAL	PED WP	6	561606	561607
C 409	ENGINE CPT -LOW COOL. LEVEL	PED MP	2	------	562350
C 410	FR JCT BOX-DIODE CONNECTOR	AMP MNL	15	561987	561986
C 411	FR JCT BOX-DIODE CONNECTOR	AMP MNL	15	561987	561986
C 412	LH DASH PANEL-MASTER SWITCH SW	EATON	8	------	562763
C 413	ENG CPT-A/C HI UNLOAD PRS SW	PED WP	2	561566	561690
C 414	RR JCT BOX	AMP MNL	9	561670	561669
C 415	ENGINE CRADLE-FAN SIGNAL	PED WP	3	561781	561782
C 416	ENGINE CRADLE-FAN SIGNAL	PED P-C	3	562237	------
C 417	FRONT JCT BOX-DIODES	AMP MNL	15	561987	561986
C 418	LH DASH PANEL-HTR WINDSH.SW	EATON	8	------	562763
C 419	FR JCT BOX-RETARDER OR JACOB	AMP MNL	3	561667	561550
C 420	ENGINE COMPT. WEBASTO WATER HTR	TC	2	561597	------
C 421	ENGINE COMPT. WEBASTO WATER HTR	TC	1	561073	------
C 422	ENGINE COMPT. WEBASTO WATER HTR	TC	2	561597	------
C 423					
C 424	UNDER INSTRUMENT PANEL CENTER	AMP MNL	3	561667	561550
C 425	FR JCT BOX-DIODES	AMP MNL	15	561987	561986
C 426	ENGINE COMPT. CLUTCH CTR FAN	PED WP	3	561781	561782
C 427					
C 428					
C 429	FR JCT BOX COMPT.	AMP MNL	6	561552	561515
C 430	LH CONSOLE-TIMER	AMP FF	8	561188	562363
C 431	LH CONSOLE-PRE HEAT.	TAB AMP	1	561540	561539
C 432	ENGINE CPT.-PROX. SW. DOOR AJAR	DEUTSCH	4	562479	562477
C 433	FR SERVICE CPT. KNEEL. PRESS. SW	PED WP	2	561566	561690
C 434	FRONT JCT. BOX-DIODES	AMP MNL	15	561987	561986
C 435	FR SERVICE CPT.(RH) KNEEL. PIEZO	AMP MNL	2	560900	560898
C 436	RH HAT RACK-WCL CENTER ROOF ACC	AMP CPC	16	561639	561640
C 437	RH HAT RACK-WCL FR & RR SECT.	AMP CPC	24	561642	561643
C 438					
C 439					
C 440					
C 441					
C 442					
C 443					
C 444					
C 445					
C 446					
C 447					
C 448					
C 449					
C 450	SOUND SYS. JCT. PANEL	MOLEX	4	562507	562503
C 451	WIRELESS MICRO-FIRST CPT BAG	MOLEX	2	562550	562549
C 452	UNDER DASH INSTR. PANEL	MOLEX	2	562550	562549
C 453	SOUND SYS. JCT.PANEL-VCP	PED WP	2	561566	561680
C 454	SOUND SYS.JCT.PAN.-FILT. VCP	PED WP	2	561566	561680
C 455	WIRELESS MICRO-LH HAT-RACK	CINCH	2	562554	562551
C 456	WORLD TRANSM.-RETARDER ACCUM.	PED MP	2	------	562427
C 457	WORLD TRANSM.-MAIN CONNECTOR	DEUTSCH	31	562572	562536
C 458	WORLD TRANSM.-TURBINE SP.SENS	PED MP	2	------	562426

NO	LOCATION	TYPE	CAVITY	#PIN HOUSING	#SOCKET HOUSING
C 459	WORLD TRANSM.-ENGINE SP.SENS.	PED MP	2	------	562426
C 460	WORLD TRANSM.-SPEED SENSOR	ITT	2	------	562541
C 461	WORLD TRANSM.-RETARDER TEMP.	PED MP	2	561566	561680
C 462	WORLD TRANSM.-RETARD SOL."K"	PED MP	2	------	562426
C 463	WORLD TRANSM.-SENSOR CONN.	DEUTSCH	16	562570	562571
C 464	RR JCT BOX-DDR CONNECTOR	DEUTSCH	6	------	562360
C 465	LH CONSOLE-SHIFTER SELECTOR	PED	20	------	562825
C 466	FR SERVICE CPT.-RESIS. MOD.	PED WP	3	------	562428
C 467	FR SERVICE CPT.-RESIS. MOD.	PED WP	3	------	562428
C 468			8		
C 469					
C 470	FR LH UPPER WHELL CPT-SILENT 1000	AMP MNL	2	561248	561247
C 471	FR LH UPPER WHELL CPT-SILENT 1000	AMP MNL	2	561248	561247
C 472	FR LH UPPER WHELL CPT-SILENT 1000	PED WP	2	561566	561690
C 473	FR LH UPPER WHELL CPT-SILENT 1000	AMP MNL	3	561667	561550
C 474	DRIVER CPT.-TEMP. SENSOR	AMP MNL	2	561247	561248
C 475	RR JCT BOX-SPEED SIGN CONNECTOR	AMP MNL	2	561248	561247
C 475M	RR JCT BOX-SPEED SIGN MANUAL TR.	MOLEX	6	562070	562069
C 475W	RR JCT BOX-SPEED SIGN WORLD TR.	MOLEX	6	562070	562069
C 476					
C 477					
C 478	ELECTRONIC DESTINATION SIGN	AMP CPC	9	561636	561637
C 479	HVAC MODULE				
C 480	UNDER DASH LH-DR. FAN SPEED CTR. MOD	PED	4	561889	561890
C 481	UNDER DASH LH-DR. FAN SPEED CTR. MOD	PED	3	561781	561782
C 482					
C 483	FR SERVICE CPT. (NOT USED)	PED PC	2	------	562237
C 484	UNDER DASH LH.-FOOT DAMPER MOTOR	PED PC	2	------	562076
C 485	UNDER DASH LH.-DASH & DEFR. DAM.MOT.	AMP MNL	3	561667	561550
C 486					
C 487					
C 488					
C 489					
C 490					
C 491					
C 492					
C 493					
C 494					
C 495					
C 496					
C 497					
C 498					
C 499					
C 500	FR LH UPPER WHELL CPT -PRODRIVER	MOLEX	6	562070	562069
C 501	FR LH UPPER WHELL CPT -PRODRIVER	PED MP	7	562433	------
C 502	LH DASH PANEL-PRE HEATER SW.	EATON	8	------	562763
C 503	LH CONSOLE-PRE HEATER SW.	EATON	2	------	561837
C 504	LH CONSOLE WEBASTO TIMER	AMP	8	------	562852
C 505	LH CONSOLE ESPAR TIMER	AMP	9	------	562681
C 506	FR JCT BOX CPT. DIGITAL CLOCK	AMP	4	561685	561687
C 507	FR SECT. LH HAT-RACK DIG. CLOCK	MOLEX	4	561477	561476
C 508	RR JCT BOX-FAN CLUTCH RETARDER	AMP MNL	6	561552	561515
C 509	FR LH UPPER WHELL CPT -DATA LOGGER	PED MP	16	------	562530
C 510	FR LH UPPER WHELL CPT -DATA LOGGER	DEUTSCH	9	562531	------
C 511	FR LH UPPER WHELL CPT -DATA LOGGER	PED MP	4	562532	------
C 512	FR LH UPPER WHELL CPT -DATA LOGGER	PED MP	10	562533	------
C 513	FR LH UPPER WHELL CPT -DATA LOGGER	AMP MNL	3	561667	561550
C 514	FR LH UPPER WHELL CPT -DATA LOGGER	PED MP	6	562433	562417
C 515	FR JCT BOX CPT.-INTERCOM	MOLEX	4	561477	561476
C 516	FR JCT BOX CPT.-INTERCOM	MOLEX	6	562070	562069
C 517	LAVATORY WALL-INTERCOM	MOLEX	6	562070	562069
C 519	UNDER DASH RH-SEDAN DOOR	HUMPHREY	2	------	562580
C 520	UNDER DASH RH-SEDAN DOOR	HUMPHREY	2	------	641385
C 521	UNDER DASH RH-SEDAN DOOR	HUMPHREY	2	------	641385
C 522	FR JCT BOX-DAYTIME LTS MODULE	BOSCH	5	------	561183
C 523	FR JCT BOX-FUSE BLOCK	PED	8	562647	562646
C 524	FR JCT BOX-FUSE BLOCK	PED	8	562647	562646

CONNECTORS CODE

NO	LOCATION	TYPE	CAVITY	#PIN HOUSING	#SOCKET HOUSING
C 525	FR JCT BOX-FUSE BLOCK	PED	8	562647	562646
C 526	FR JCT BOX-FUSE BLOCK	PED	8	562647	562646
C 527	FR JCT BOX-FUSE BLOCK	PED	8	562647	562646
C 528	FR JCT BOX-FUSE BLOCK	PED	8	562647	562646
C 529	FR JCT BOX-12V OUTLET	AMP MNL	2	561247	561248
C 530	RR JCT BOX-FUSE BLOCK	PED	8	562647	562646
C 531	RR JCT BOX-FUSE BLOCK	PED	8	562647	562646
C 532	RR JCT BOX-FUSE BLOCK	PED	8	562647	562646
C 533	RR JCT BOX-FUSE BLOCK	PED	8	562647	562646
C 534	RR JCT BOX-FUSE BLOCK	PED	8	562647	562646
C 535	RR JCT BOX-FIRE MODULE DETECT.	AMP MNL	3	561667	561550
C 536	UNDER DASH RH-DRIVER'S HTR TEMP. CTR	AMP MNL	6	561552	561515
C 537	BATT. CPT.-A/C PRESS. SIGN. RLY	AMP MNL	2	561248	561247
C 538	FR SERVICE CPT.-OUTSIDE TEMP. SENSOR	AMP MNL	2	561248	561247
C 539	HVAC DASH MODULE OUTPUT CON	MOLEX	24		562780
C 540	HVAC DASH MODULE INPUT CON	MOLEX	22		562781
C 541	SOUND SYS. JCT PANEL-AUDIO SEAT SYS.	PED WP	2	561566	561690
C 542	LH HAT RACK-AUDIO SEAT SYSTEM	AMP MNL	3	561667	561550
C 543	RR JCT BOX-PARK. BRAKE STOP LTS RESIS.	PED WP	2	561566	561690
C 544	SOUND SYS JCT PANEL-AUDIO SEAT SYS.	PED WP	3	561781	562428
C 545	LH HAT RACK-AUDIO SEAT SYSTEM	AMP MNL	3	561667	561550
C 546					
C 547	RH DASH PANEL-ACCESSORIES	AMP CPC	37	561645	561646
C 548	LH DASH PANEL-T.T. LT. TEST SW.	EATON	8	------	562763
C 549	LH DASH PANEL-FAN CLUTCH OVERR. SW	EATON	8	------	562763
C 550	LAST LUGG. CPT. -WCL RICON	AMP CPC	16	561694	561695
C 551	LAST LUGG. CPT. -WCL RICON	AMP CPC	16	561694	561695
C 552	LAST LUGG. CPT. -WCL RICON	AMP CPC	9	561636	561637
C 553	UNDER DASH R.H. - CONTROL. HEAD	MOLEX	16	---------	562559
C 554	UNDER DASH R.H. - CONTROL. HEAD	MOLEX	16	---------	562559
C 555	UNDER DASH R.H. - CONTROL. HEAD	MOLEX	16	---------	562559
C 556	UNDER DASH R.H. - RADIO ACC.	MOLEX	2	562550	562549
C 557	UNDER DASH R.H. - RADIO ACC.	MOLEX	9	562556	562555
C 558	UNDER DASH R.H. - RADIO ACC.	MOLEX	4	562507	562503
C 559	L.H. HAT RACK - PASSENGER SPK.	MOLEX	4	562507	562503
C 560	SOUND SYS. JCT. PANEL - POWER AMPLI	MOLEX	4	562507	562503
C 561	L.H. HAT RACK - WIRELESS MICRO	MOLEX	4	562507	562503
C 562	L.H. HAT RACK - VCP	MOLEX	9	562556	562555
C 563	L.H MODESTY PANEL - DRIVERS SPK.	MOLEX	4	562507	562503
C 564	L.H MODESTY PANEL - MICRO	MOLEX	4	562507	562503
C 565	R.H MODESTY PANEL - MICRO	MOLEX	4	562507	562503
C 566	L.H. CONSOLE - BOOM MICRO	MOLEX	4	562507	562503
C 567	L.H. CONSOLE - DRIVERS MICRO	MOLEX	4	562507	562503
C 568	SOUND SYS. JCT. PANEL - PASS. SPK	CINCH	4	562553	562552
C 569	SOUND SYS. JCT. PANEL - POWER AMPLI.	MOLEX	9	562556	562555
C 570	UNDER DASH PANEL TTLT	MOLEX	6		562464
C 571	UNDER DASH PANEL TTLT	MOLEX	20		562778
C 572	UNDER DASH PANEL TTLT	MOLEX	18		562779
C 573	UNDER DASH PANEL TTLT	MOLEX	16		562465
C 574	HAT -RACK FLUOR. INDIRECT LIGHTING	MOLEX	6	----------	562759
C 575	HAT -RACK FLUOR. INSTATION LIGHT	MOLEX	4	562507	562503
C 576	HAT -RACK FLUOR. INDIRECT LIGHTING	AMP MNL	3	561667	561550
C 577	HAT -RACK FLUOR. INDIRECT LIGHTING	AMP MNL	3	561667	561550
C 578	HAT -RACK FLUOR. INSTATION LIGHT	MOLEX	4	562507	562503
C 579					
C 580	RH DASH PANEL-HAT RACK FAN SW	EATON	8	--------	562763
C 581					
C 582	FRONT SERVICE CMPT. - WINDOWS AJAR	PED WP	2	561566	561690
C 583	L.H. DASH PANEL - MASTER KEY	DEUTSCH	2	562486	562485
C 584	FRONT SERVICE CMPT. - AIR HORH	HUMPHREY	3	--------	641385
C 585					
C 586					
C 587					
C 588	FRONT SERVICE CPT. CENTER SOUND SYS.	AMP. CPC	37	561645	561646
C 589	UNDER DASH - L.H. MIRROR	AMP MNL	9	561670	561669
C 590	UNDER DASH - R.H. MIRROR	AMP MNL	9	561670	561669
C 591	L.H.CONSOLE - MIRROR L.H.	EURAMTEC	8	--------	562799

NO	LOCATION	TYPE	CAVITY	#PIN HOUSING	#SOCKET HOUSING
C 592	L.H.CONSOLE - MIRROR R.H.	EURAMTEC	8	--------	562799
C 593	BATTERY CMPT. - CHARGER	PED WP	3	561781	561782
C 594	FRONT ROOF - DRIVERS LIGHT	LEEKRAFT		---------	562803
C 595	DASH CENTER MODULE - OPEN DOOR	MOLEX	4	561477	561476
C 596	DASH CENTER MODULE - CLOSE DOOR	MOLEX	4	561477	561476
C 597	L.H. DASH PANEL - DISPLAY SET SW.	MOLEX	5		562812
C 598	L.H. DASH PANEL - DISPLAY SET SW.	MOLEX	5		562812
C 599					
C 600	ENGINE CPT.-A/C LOW PRESS SW. UNLOAD	PED	2	562348	562471
C 601	L.H. ROOF - WINDOW AJAR	AMP MNL	2	561248	561247
C 602	L.H. ROOF - WINDOW AJAR	MOLEX	4	561477	561476
C 603	R.H. ROOF - WINDOW AJAR	AMP MNL	2	561248	561247
C 604					
C 605	HAT RACK - MOTOR FAN	PED	2	560997	561030
C 606	HAT RACK - MOTOR FAN	PED	2	560997	561030
C 607	FRONT SERVICE CMPT. RPM SIGNAL	PED WP	2	561566	561690
C 608	FRONT SERVICE CMPT. SPEED SIGNAL	PED WP	2	561566	561690
C 609	LAVATORY - NIGHT LIGHT				
C 610	RR JCT BOX	AMP MNL	6	561552	561515
C 611	HAT RACK READING LTS RICON	MOLEX	6	562558	562557
C 612	HAT -RACK FLUOR. INSTATION LTS RICON	MOLEX	4	562507	562503
C 613	HAT -RACK INDIRECT LTS RICON	AMP MNL	3	561667	561550
C 614	HAT -RACK INDIRECT LTS RICON	AMP MNL	3	561667	561550
C 615					
C 616					
L X	CLUSTER	JAE	22		562766
L Y	CLUSTER	JAE	30		562767
R X	CLUSTER	JAE	22		562764

CONNECTORS CODE

NO	LOCATION	TYPE	CAVITY	#PIN HOUSING	#SOCKET HOUSING
C AA1	BEHIND DASH - SONALERT	BOSCH	5		561183
C AA2	BEHIND DASH - SONALERT	BOSCH	5		561183
C X1	FR LH UPPER WHELL CPT-ABS	WABCO	18		562792
C X2	FR LH UPPER WHELL CPT-ABS	WABCO	6		562793
C X3	FR LH UPPER WHELL CPT-ABS	WABCO	9		562794
C X4	FR LH UPPER WHELL CPT-ABS	WABCO	15		562795`
C S	RR JCT BOX ECU WORLD TR.	PED	32		562817
C T	RR JCT BOX ECU WORLD TR.	PED	32		562824
C V	RR JCT BOX ECU WORLD TR.	PED	32		562823
CV I2	RR JCT BOX-WORLD TRANSM. & EATON	AMP CPC	9	561636	561637
C Y	CLUSTER	JAE	30		562765
C 1	FR JCT BOX COMPARTMENT	AMP CPC	14	561585	561584
C 2	FR JCT BOX COMPARTMENT	AMP CPC	16	561639	561640
C 3	FR JCT BOX COMPARTMENT	AMP CPC	24	561641	561643
C 4	FR JCT BOX COMPARTMENT	AMP CPC	37	561644	561646
C 5	FR SERVICE COMPT.-UNDERNEATH	AMP CPC	37	561644	561646
C 6	FR SERVICE COMPT.-UNDERNEATH	AMP CPC	16	561639	561640
C 7					
C 8	FR SERVICE COMPT.-UNDERNEATH	AMP CPC	24	561641	561643
C 9	FR SERVICE COMPT.-UNDERNEATH	AMP CPC	24	561641	561643
C 10					
C 11	FR SERVICE COMPARTMENT	AMP CPC	37	561644	561646
C 12	FR SERVICE COMPARTMENT	AMP CPC	16	561639	561640
C 13	LH CONSOLE-CTR MIRROR	AMP MNL	6	561552	561515
C 14	UNDER DASH-LH MIRROR	AMP MNL	9	561661	561662
C 15	RR JCT BOX	AMP CPC	24	561641	561643
C 16	LH CONSOLE SW-CRUISE ON OFF	EATON	10	------	562763
C 17	LH CONSOLE SW-CRUISE RESUME	EATON	10	------	562763
C 18	LH CONSOLE SW-CRUISE SET	EATON	10	------	562763
C 19	LH CONSOLE DECEL SW	EATON	10	------	562763
C 20	RR JCT BOX	AMP CPC	37	561644	561646
C 21	RR JCT BOX	AMP CPC	24	561641	561643
C 22	RR JCT BOX - EATON TRANSM.	AMP MNL	6	561552	561515
C 23	DDEC ENGINE-ECM J1939	PED MP	6	-------	561962
C 24	DDEC ENGINE	PED WP	1	561605	561577
C 25	RR JCT BOX - EATON TRANSM. J1939	DEUTCH	3	562877	562884
C 26	HYD & MAN TRANSM.-NEUT.& B/U	PED WP	4	561610	561611
C 27	HYD & MAN TRANSM.-SPEED SENS.	PED WP	2	561566	561690
C 28	EATON TRANSMISSION	DEUTCH	3	562877	562884
C 29	EATON TRANSMISSION	PED MP	6	562878	------
C 30	RR JCT BOX - ECU EATON TRANSM.	PED MP	32	------	562866
C 31	RR JCT BOX - ECU EATON TRANSM.	PED MP	24	------	562865
C 32	DDEC ENGINE-ECM	PED	30	------	561600
C 33	RR JCT BOX - EATON TRANSM.	DEUTCH	9	562531	------
C 34	RH. CONSOLE - EATON TRANSM. SHIFTER	PED MP	3	------	562871
C 35	RR JCT BOX	AMP CPC	24	561642	561643
C 36	RH. CONSOLE - EATON TRANSM. SHIFTER	PED MP	24	------	562874
C 37	RR SECTION-LH HAT RACK	MOLEX	6	562558	562557
C 38	RR SECTION-RH HAT RACK	MOLEX	6	562558	562557
C 39	LH CONSOLE - EATON TRANSM. DISPLAY	AMP MNL	4	561551	561668
C 40	RR JCT BOX - EATON TRANSM. J1939	DEUTCH	3	562877	562884
C 41	LAVATORY ROOF FLUORESCENT	AMP MNL	2	560900	560898
C 42	LAVATORY BACK WALL-WTR TANK	AMP MNL	2	560900	560898
C 43	LAVATORY BACK WALL-ACCES.	AMP MNL	9	561661	561662
C 44	EATON TRANSM. J1939	DEUTCH	3	562877	562884
C 45	FR JCT BOX COMPARTMENT	AMP CPC	24	561642	561643
C 46	EATON TRANSM. J1939	DEUTCH	3	562877	562884
C 47	FR SERVICE COMPARTMENT	AMP CPC	16	561694	561695
C 48					
C 49	BATTERIE COMPT.-LT	AMP MNL	2	561248	561247
C 50	FR SERVICE COMPT.-LOW BUOY	PED WP	1	561605	561577
C 51					
C 52	RR JCT BOX	AMP CPC	22	561709	561710
C 53					
C 54					
C 55	RH SWITCH PANEL	AMP CPC	9	561636	561637
C 56					

NO	LOCATION	TYPE	CAVITY	#PIN HOUSING	#SOCKET HOUSING
C 57					
C 58	RR JCT BOX AC PANEL	DEUTSCH	24	562280	562283
C 59	RR JCT BOX AC PANEL	AMP CPC	14	561584	561583
C 60	RR JCT BOX COMPT.-LT	AMP MNL	2	561248	561247
C 61	LUGGAGE COMPARTMENT LTS	AMP MNL	2	561248	561247
C 62	LUGGAGE COMPARTMENT LTS	AMP MNL	2	561248	561247
C 63	LUGGAGE COMPARTMENT LTS	AMP MNL	2	561248	561247
C 64	LUGGAGE COMPARTMENT LTS	AMP MNL	2	561248	561247
C 65	LUGGAGE COMPARTMENT LTS	AMP MNL	2	561248	561247
C 66	LUGGAGE COMPARTMENT LTS	AMP MNL	2	561248	561247
C 67	LUGGAGE COMPARTMENT LTS	AMP MNL	2	561248	561247
C 68	LUGGAGE COMPARTMENT LTS	AMP MNL	2	561248	561247
C 69	RR AXLE ACC-INSIDE PVC END	PED WP	6	561568	561578
C 70	LH CONSOLE	AMP CPC	16	561642	561643
C 71	FR JCT BOX COMPARTMENT	AMP CPC	37	561645	561646
C 72	FR JCT BOX COMPARTMENT	AMP CPC	24	561642	561643
C 73	DASH CENTER PANEL	AMP CPC	16	561639	561640
C 74	FR JCT BOX COMPARTMENT	AMP CPC	37	561645	561646
C 75					
C 76	LUGGAGE COMPT.-AIR RET.SENS.	AMP MNL	2	561248	561247
C 77	LUGGAGE COMPT.-AIR RET.SENS.	AMP MNL	2	561248	561247
C 78					
C 79					
C 80	LUGGAGE COMPT.-AIR RET.SENS.	AMP MNL	2	561248	561247
C 81	PASSENGER COMPT.-AISLE LTS	AMP MNL	2	560900	560898
C 82	ENTRANCE DOOR	MOLEX	6	562070	562069
C 83	ENTRANCE DOOR-PROIMITY SW	MOLEX	4	561477	561476
C 84	ENTRANCE DOOR-PRESSURE SW	PED WP	2	561566	561690
C 85	UNDER INSTRUMENT PANEL LH	AMP MTA-100	------	562248	------
C 86					
C 87	RR END ROOF	AMP CPC	9	561636	561637
C 88	RR END ROOF-CLEARANCE LTS	AMP MNL	2	560900	560898
C 89	RR END ROOF-B/U NONITOR	AMP CPC	4	561582	561581
C 90	RR JCT BOX	AMP CPC	15	561987	561986
C 91	RR JCT BOX	AMP CPC	37	561714	561713
C 92	FR LH UPPER WHELL CPT-ABS	AMP CPC	9	561635	561637
C 93	FR LH UPPER WHELL CPT-ABS		35	------	641094
C 94					
C 95	CONDENSOR CPT - LIQ. SOL. VALVE	PED WP	2	561566	561690
C 96	FR AXLE ACCESSORIES	AMP CPC	14	561585	561585
C 97	RR AXLE ACC-INSIDE PVC END	PED WP	6	561568	561578
C 98	FR SERVICE COMPT-EL.FT.PEDAL	PED WP	3	561782	561781
C 99	FR SERVICE COMPT LTS	AMP MNL	2	561248	561247
C 100	LH CONSOLE – 120 VOLTS SWITCH	EATON	8	------	562763
C 101	FR SERVICE COMPT-ELEC. HORNS	PED WP	2	561566	561690
C 102	FR SERV & SIDE CPT-FLASH. LH	GROTE	2	------	562155
C 103	FR SERV & SIDE CPT-MARKERS	GROTE	2	------	562155
C 104	FR SERV & SIDE CPT-FLASH. RH	GROTE	2	------	562155
C 105	FR SERVICE COMPT-LIQ.S.VALVE	PED WP	2	561566	561690
C 106	FR SERVICE COMPT-WATER VALVE	PED WP	2	561566	561690
C 107	EVAPORATOR COMPT-DAMPER	PED WP	2	561566	561690
C 108	FR SERVICE COMPT-KNEEL.SYS	PED WP	2	561566	561690
C 109	FR SERVICE COMPT-KNEEL.SYS	PED WP	2	561566	561690
C 110	FR SERVICE COMPT-KNEEL.SYS	PED WP	2	561566	561690
C 111	EVAPORATOR COMPT-DAMPER	DEUTSCH	2	562486	562485
C 112	EVAPORATOR COMPT-SPEED MOT CTRL	DEUTSCH	5	------	562566
C 113	BATT. & RR J.B.CPT.MARKER LT	GROTE	2	------	562155
C 114	RR J. BOX CPT DOOR DIR LT LH	GROTE	2	------	562155
C 115	ENGINE COMPT-AIR DRYER	PED WP	2	561566	561690
C 116	ENGINE COMPT. LTS	PED WP	1	561605	561577
C 117					
C 118	ENGINE COMPT-LAVATORY FAN	PED WP	2	561566	561690
C 119	ENGINE CPT RR DOOR RH LO LAMP	PED WP	6	561606	561607
C 120	ENGINE CPT RR DOOR LH LO LAMP	PED WP	6	561606	561607
C 121	BATTERIE CPT. DOOR DIR LT RH	GROTE	2	------	562155
C 122	ENGINE CPT-UNLOAD TAG SYSTEM	PED WP	2	561566	561690
C 123	TAG AXLE-UNLOAD TAG RH VALVE	PED WP	2	561566	561690

CONNECTORS CODE

NO	LOCATION	TYPE	CAVITY	#PIN HOUSING	#SOCKET HOUSING
C 124	ENGINE CPT-ETHER SW	PED WP	2	561566	561690
C 125	ENGINE CPT-B/U ALARM	PED WP	2	561566	561690
C 126	ENGINE CPT-FLUSHING PUMP	PED WP	2	561566	561690
C 127	ENGINE CPT-FUEL FILTER	PED WP	2	561566	561690
C 128	ENGINE CPT-A/C COMPR.CLUTCH	ITT SS	2	561813	561812
C 129	ENGINE CPT-PRE-HEAT WATER	AMP FF	6	561672	561186
C 130	ENGINE CPT-UNLOADER	ITT SS	2	561813	561812
C 131	ENGINE CPT-UNLOADER	ITT SS	2	561813	561812
C 132	ENGINE CPT-A/C LO PRESS SW	PED WP	2	561566	561690
C 133	ENGINE CPT-A/C HI PRESS SW	PED WP	2	561566	561690
C 134	FR JCT BOX-LUGGAGE DIODE CON.	AMP MNL	15	561987	561986
C 135	FR JCT BOX-LUGGAGE DIODE CON.	AMP MNL	15	561987	561986
C 136	RR JCT BOX - A/C PANEL DIODE CONN.	AMP MNL	15	561987	561986
C 137	RR JCT BOX-TRANSMITTER	AMP MNL	2	560900	560898
C 138	RR JCT BOX-CONTROL MODULE	AMP HDP	15	------	562012
C 139	RR JCT BOX-LOGIC MODULE	AMP HDP	15	562011	------
C 140	HVAC DASH MODULE THERMOMETER	MOLEX	4		562782
C 141	INSTRUMENT PANEL LH UNLOAD TAG	AMP	2	561248	561247
C 142	LAVATORY DOOR WALL	AMP MNL	2	561248	561247
C 143	LAVATORY DOOR WALL	AMP MNL	3	560908	562006
C 144	UNDER LH SEAT-AISLE LTS	AMP MNL	4	560851	560852
C 145	RR JCT BOX CPT-RR SIDE LTS	AMP MNL	9	561670	561669
C 146	ENGINE CPT-MODULATOR VALVE	AMPHENOL	2	------	560412
C 147	BATT & RR J.B.CPT-DOCK.LTS	PED WP	2	561566	561690
C 148					
C 149	CONDENSER CPT-FAN MOTOR	ORDNANCE	3	562555	562001
C 150					
C 151	EVAPORATOR CPT-THERMOSTAT	ITT SS	2	561813	562159
C 152	CONDENSER CPT-FUEL GAUGE	PED WP	4	561610	561611
C 153	EVAPORATOR CPT-AIR AMB. SENS	AMP MNL	2	561248	561247
C 154	EVAPORATOR CPT-FRESH AIR SENS	ITT SS	2	561813	561812
C 155	EVAPORATOR CPT-WATER VALVE	PED WP	4	561610	561611
C 156	EVAPOR. CPT-BYPASS WATER VAL.	PED WP	2	561566	561690
C 157	EVAPORATOR CPT-WATER PUMP	PED WP	2	561566	561690
C 158	CONDENSER CPT-A/C LO TEMP.	PED WP	2	561566	561690
C 159	CONDENSER CPT-A/C HI TEMP.	PED WP	2	561566	561690
C 160	FR AXLE-ABS RH SENSOR	WABCO	2	641132	------
C 161	FR AXLE-ABS RH VALVE	WABCO	3	------	641098
C 162	FR AXLE-ABS LH VALVE	WABCO	3	------	641098
C 163	FR AXLE-ABS LH SENSOR	WABCO	2	641132	------
C 164	RR AXLE-ABS LH SENSOR	DEUTSCH	2	562486	562485
C 165	RR AXLE-ABS LH VALVE	WABCO	3	------	641098
C 166	RR AXLE-ABS RH VALVE	WABCO	3	------	641098
C 167	RR AXLE-ABS RH SENSOR	DEUTSCH	2	562486	562485
C 168	RR AXLE-ABS OPT ATC	PED WP	2	561566	561690
C 169	RR JCT BOX-SPEED SW	AMP HDP	15	------	562012
C 170	FR JCT BOX-FLASHER UNIT	TC	2	------	561940
C 171	LH CONSOLE	AMP CPC	24	561642	561643
C 172	ENGINE COMPT-WATER TANK HEAT.	PED WP	2	561566	561690
C 173	LAV.POTABLE-WATER TANK HEAT.	AMP MNL	2	560900	560898
C 174	UNDER DASH RH-HTR MODULE	AMP MNL	9	561670	561669
C 175	UNDER DASH RH-HTR MODULE	AMP MNL	9	561670	561669
C 176	UNDER DASH RH-WIPER PULSE	AMP FF	6	------	561186
C 177	UNDER DASH RH-WIPER MOTOR	AMP FF	6	------	561186
C 178	UNDER DASH RH-LH FAN	TC	2	561030	560997
C 179	UNDER DASH RH-RH FAN	TC	2	561030	560997
C 180	RR JCT BOX-DIODE CONNECTOR	AMP MNL	15	561987	561986
C 181	RR JCT BOX-DIODE CONNECTOR	AMP MNL	15	561987	561986
C 182					
C 183	FR SERVICE CPT-KNEELING PAN.	PED WP	4	561610	561611
C 184	FR SERVICE CPT-KNEELING SW	ITT SS	3	561111	561080
C 185					
C 186	RR JCT BOX CPT.-SPEED SIGN.TR	PED WP	2	561566	561690
C 186M	RR JCT BOX CPT.-SPD SIGN. M.TR	PED WP	2	561566	561690
C 186W	RR JCT BOX CPT.-SPD SIGN. WT	PED WP	2	561566	561690
C 187	FR JCT BOX-RPM RESISTOR CON.	AMP MNL	6	561552	561515
C 188					

NO	LOCATION	TYPE	CAVITY	#PIN HOUSING	#SOCKET HOUSING
C 189	ENGINE CPT RR DOOR B/U LT	PED WP	2	561566	561690
C 190	ENGINE CPT RR DOOR TAIL LT	PED WP	2	561566	561690
C 191	ENGINE CPT RR DOOR RH STOP LT	PED WP	2	561566	561690
C 192	ENGINE CPT RR DOOR RH DIR. LT	PED WP	2	561566	561690
C 193					
C 194	ENGINE CPT RR DOOR LH DIR. LT	PED WP	2	561566	561690
C 195	ENGINE CPT RR DOOR LH STOP LT	PED WP	2	561566	561690
C 196	ENGINE CPT RR DOOR CYCLOP LT	PED WP	2	561566	561690
C 199	ENGINE CPT RR DOOR LICENCE LT	DOM AUTO	2	930210	------
C 200	RH HAT RACK-FLUORESCENT	AMP MNL	2	561248	561247
C 201	RH HAT RACK-FLUORESCENT	AMP MNL	2	561248	561247
C 202	RH HAT RACK-INDIRECT LIGHTING	MOLEX	2	--------	562758
C 203	RH HAT RACK-INDIRECT LIGHTING	MOLEX	6	--------	562759
C 204	RH HAT RACK-GENERAL LT	AMP MNL	2	560900	560898
C 205	FR SECT.-RH HAT RACK SPEAKER	AMP MNL	9	561661	561662
C 206	RH HAT RACK-READING LT	AMP FF	4	----------	562756
C 207	LH HAT RACK-READING LT	AMP FF	4	----------	562756
C 208	LH HAT RACK-BALLAST	MOLEX	2	----------	562758
C 209	LH HAT RACK HOTESS CHIME	AMP MNL	3	561667	561550
C 210	FR SECT.-LH HAT RACK SPEAKER	AMP MNL	9	561661	561662
C 211	FR ROOF-STORE LH	AMP MNL	2	560900	560898
C 212	FR ROOF-STORE RH	AMP MNL	2	560900	560898
C 213	FR ROOF-CLEARANCE LT	AMP MNL	2	560900	560898
C 214	ENGINE CPT J1922				
C 215	TAG AXLE - A.T.C. SYSTEM				
C 216	TAG AXLE - A.T.C. SYSTEM				
C 217	RH DASH PANEL-FRONT CAMERA SW	EATON	8	--------	562763
C 218	RH DASH PANEL-FRONT CAMERA SW	AMP MNL	2	560900	560898
C 219					
C 220	RR.JCT.BOX-FUEL PRIME PUMP	TC	1	561070	561073
C 221					
C 222					
C 223					
C 224					
C 225					
C 226					
C 227					
C 228					
C 229					
C 230	ENG.CPT.-FUEL PRIME PUMP FEED	DEUTSCH	2	562486	562485
C 231	ENG.CPT.-FUEL PRIME PUMP SW.	PED WP	2	561566	561690
C 232	ENG.CPT.-FUEL PRIME PUMP	PED WP	2	561566	561690
C 233	FR. SERVICE COMPT.	VDO	8		562043
C 234	FR. SERVICE COMPT.	VDO	8		562044
C 235	FR. SERVICE COMPT.	VDO	8		562041
C 236	LUGGAGE COMPARTEMENT	AMP MNL	4	560851	560852
C 237	UNDER DASH LH-JACOB CLUTCH SW	ITT SS	3	561111	561080
C 238	RR JCT BOX-DIODE CONNECTOR	AMP MNL	9	561670	561669
C 239	FR SERVICE CPT-HI BUOY VALVE	PED WP	2	561566	561690
C 240	FR SERVICE CPT-KNEEL PROX SW	PED WP	2	561566	561690
C 241					
C 242	FR SERVICE CPT-MARK & DIR LT	ITT SS	3	561111	561080
C 243	FR SERVICE CPT-HEADLAMPS	TC	3	------	561071
C 244	FR SERVICE CPT-LH FOG LAMP	ITT SS	2	561813	561812
C 245	FR SERVICE CPT-RH FOG LAMP	ITT SS	2	561813	561812
C 246	FR SERVICE CPT-MARK & DIR LT	ITT SS	3	561111	561080
C 247					
C 248	FR JCT BOX-WIPER PULSE GEN	AMP FF	6	------	561108
C 249					
C 250					
C 251	LH DASH PANEL-FAST IDLE SW	EATON	8	------	562763
C 252					
C 253	LH DASH PANEL-ETHER SW	EATON	8	------	562763
C 254	INST. PANEL RH-ENTR.DOOR SW.	TORRIX	5	------	562110
C 255	LH DASH PANEL-JACOB & RETARDER SW	EATON	8	------	562763
C 256					
C 257					

CONNECTORS CODE

NO	LOCATION	TYPE	CAVITY	#PIN HOUSING	#SOCKET HOUSING
C 258	LH SW PANEL-MULTI FUNC. SW	AMP FF	8	561188	------
C 259	LH SW PANEL-MULTI FUNC. SW	AMP FF	6	------	561108
C 260	FR SERVICE CPT-LUG DOOR LCK	PED WP	6	561606	561607
C 261	UNDER DASH RH-DOOR MODULE	AMP MNL	9	561670	561669
C 262	UNDER DASH RH-DOOR MODULE	AMP MNL	4	561551	561668
C 263	UNDER DASH RH-DOOR MODULE	AMP MNL	3	561667	561550
C 264	UNDER DASH RH-DOOR MODULE	AMP MNL	3	561667	561550
C 265	UNDER DASH RH-DOOR MODULE	AMP HDP-20	15	562011	562012
C 266					
C 267	UNDER DASH RH	AMP CPC	24	561642	561643
C 268	UNDER DASH LH-MIRROR	AMP MNL	6	561552	561515
C 269	UNDER DASH RH-MIRROR	AMP MNL	6	561552	561515
C 270	LH MIRROR POST	MOLEX	6	562070	562069
C 271	RH MIRROR POST	MOLEX	6	562070	562069
C 272	LH MIRROR	SPARTAN	6	------	990158
C 273	RH MIRROR	SPARTAN	6	------	990158
C 274	RR. JCT. BOX – SIGNAL ALT. MODULE				
C 275	UNDER DASH RH-DOOR MODULE	AMP MNL	9	561670	561669
C 276	UNDER DASH RH-LOCK SOL.VALVE	AMP MNL	2	561248	561247
C 277					
C 278					
C 279	UNDER DASH CYLINDER READ SW.	AMP MNL	2	561248	561247
C 280	LH CONSOLE-UNLOAD TAG SW.	NGR	10	------	562763
C 281					
C 282					
C 283					
C 284					
C 285					
C 286	RH SW PANEL-A/C & HEAT	EATON	8	------	562763
C 287	ENGINE COMPT-LTS SW	PED WP	2	561566	561690
C 288	RH SW PANEL-FRESH AIR	EATON	8	------	562763
C 289					
C 290					
C 291					
C 292					
C 293					
C 294					
C 295					
C 296					
C 297	INSTRUMENT PANEL RH -LTS	AMP MNL	2	560900	560898
C 298					
C 299	RH DASH PANEL SW-GALLEY	EATON	8	------	562763
C 300					
C 301					
C 302					
C 303					
C 304					
C 305					
C 306					
C 307					
C 308	LH CONSOLE SW-RHEOSTAT	TC	2	561030	560997
C 309	DDEC ENGINE-ECM POWER CON.	PED MP	5	------	562345
C 310	LH DASH PANEL -LUG. DOOR LCK SW	EATON	8	------	562763
C 311	RH DASH PANEL -HOS & PAS CHIME SW	EATON	8	------	562763
C 312	RH DASH PANEL -READING LTS SW	EATON	8	------	562763
C 313	RH DASH PANEL -GEN & FLUOR LTS SW	EATON	8	------	562763
C 314	LH DASH PANEL-FR DEST. SIGN SW	EATON	8	------	562763
C 315	LH DASH PANEL-LH STORE SW	EATON	8	------	562763
C 316	LH CONSOLE SPARE SWITCH	EATON	8	------	562763
C 317	LH DASH PANEL-RH STORE SW	EATON	8	------	562763
C 318	LH CONSOLE SW-DRV WINDOW LIFT	EATON	8	------	562763
C 319					
C 320	RH DASH PANEL-DRIVER'S LTS SW	EATON	8	------	562763
C 321					
C 322	LH CONSOLE DRV WIND LIFT MOT	PED PO	2	------	561848
C 323	LH CONSOLE CRUISE CTR SW PAN. AMP	CPC	9	561636	561637
C 324					

NO	LOCATION	TYPE	CAVITY	#PIN HOUSING	#SOCKET HOUSING
C 325	LH DASH PANEL-KNEELING SW	EATON	8	------	562763
C 326	LH CONSOLE SW-SPARE	EATON	8	------	562763
C 327	ENGINE CONTROL	DEUTSCH	6	562583	562581
C 328	GALLEY-LAMP	AMP MNL	2	561248	561247
C 329	ENGINE TACHO SIGNAL	PED WP	3	561781	561789
C 330					
C 331	GALLEY MICROWAVE SW	EATON	8	------	562763
C 332					
C 333	GALLEY RH CONTAINER SW	EATON	8	------	562763
C 334	GALLEY LH CONTAINER SW	EATON	8	------	562763
C 335					
C 336					
C 337	INSTR PANEL LH-UP WIPER SW	EATON	8	------	562763
C 338	INSTR PANEL LH-UP DEFROST SW	EATON	8	------	562763
C 339	INSTR PANEL LH-UP WASHER SW	EATON	8	------	562763
C 340	FR JCT. BOX FIRE PIEZO ALARM	AMP MNL	2	560900	560898
C 341	INSTR PANEL LH-HEAT MIRROR SW	EATON	8	------	562763
C 342	ENGINE RR START SW	DEUTSCH	2	562586	562585
C 343	INSTR PANEL LH-HEADLAMP SW	EATON	8	------	562763
C 344	INSTR PANEL LH-HAZARD LT SW	EATON	8	------	562763
C 345	INSTR PANEL LH-FOG LT SW	EATON	8	------	562763
C 346					
C 347	INSTR PANEL LH-DASH LT SW	AMP MNL	2	560900	560898
C 348	INSTR PANEL CENT-RACOR MODULE	MOLEX	6	562070	562067
C 349					
C 350	RH CONSOLE-THERMOMETER	AMP MNL	3	561667	561550
C 351	LH HAT RACK-FLUOR 110V	MOLEX	4	561477	561476
C 352	RH CONSOLE-DRV TEMP SENSOR	BURNDY	4	------	561104
C 353	INSTR PANEL RH-DRV FAN RHEOST	AMP MNL	6	561552	561515
C 354	INSTR PANEL RH-DRV TEMP CTR	AMP MNL	6	561552	561515
C 355	INSTR PANEL RH-FR TEMP CTR	AMP MNL	3	561667	561550
C 356					
C 357	INSTR PANEL RH-WATER TEMP GA	AMP MNL	3	561667	561550
C 358	INSTR PANEL RH-FUEL LEVEL GA	AMP MNL	3	561667	561550
C 359					
C 360					
C 361	FR ROOF-WIPER MOTOR	AMP FF	6	------	561186
C 362	FR ROOF-LAVATORY OCCUPIED LT	AMP MNL	2	561248	561247
C 363	FR ROOF-WATCH YOUR STEP LT	AMP MNL	2	561248	561247
C 364	FR ROOF-DESTINATION SIGN	AMP MNL	3	561667	561550
C 365	FR ROOF-UP WINDSHIELD DEFROST	AMP MNL	3	561667	561550
C 366	RH DASH PANEL-GRN & RED LEDS	AMP MNL	3	560908	562006
C 367	ENGINE COMPT-DIF OIL T SENSOR	PED WP	2	561566	561690
C 368	FR ROOF-DEST. SIGN BALLAST	AMP MNL	3	561667	561550
C 369	FR ROOF-DEST. SIGN OPER. SW	TORRIX	5	------	562110
C 370	FR ROOF-DEST. SIGN FLUOR.	AMP MNL	2	560900	560898
C 371	FR ROOF-DEST. SIGN FLUOR.	AMP MNL	2	560900	560898
C 372	FR ROOF-DEST. SIGN SPEED SW	MOLEX	4	561477	561476
C 373	FR ROOF-NO SMOKING LT	AMP MNL	2	561248	561247
C 374	LH SWITCH PANEL	AMP MNL	6	561552	561515
C 375					
C 376					
C 377	LH DASH PANEL-STOP ENG.OVERIDE SW	EATON	8	------	562763
C 378					
C 379					
C 380	LH CONSOLE-DDR CONNECTOR	DEUTSCH	6	562360	------
C 381					
C 382					
C 383					
C 384					
C 385					
C 386	LH DASH PANEL-WCL POWER SYSTEM SW	EATON	8	------	562763
C 387	RR JCT BOX (WCL)	AMP MNL	9	561661	561662
C 388	RR JCT BOX (WCL)	AMP MNL	12	561735	561734
C 389	WCL REAR DOOR	MOLEX	4	561477	561476
C 390	LAVATORY WALL-WCL REMOTE CTR	EATON	8	------	562763
C 391	LAVATORY WALL-WCL LAMP	EATON	8	------	562763

CONNECTORS CODE

NO	LOCATION	TYPE	CAVITY	#PIN HOUSING	#SOCKET HOUSING
C 392	LAVATORY WALL-WCL SW. LT.	EATON	2	------	561835
C 393	LAVATORY WALL-WCL REMOTE SYS.	AMP CPC	4	561686	561687
C 394	UNDER INSTR. PANEL- B/U MONITOR	AMP MNL	4	560851	560852
C 395	DRIVER'S COMPT. - B/U MONITOR	AMP	5	------	------
C 396	FR SECT. LH HAT RACK-SPEAKER	MOLEX	4	562507	562503
C 397	ENGINE COMPT. CRADLE ACC.	DEUTSCH	40	562281	562284
C 398					
C 399	ENGINE COMPT. – PRE-EXITATION ALT.	PED WP	2	561566	561690
C 400	ENGINE COMPT. BLOCK HEATER	PED MP	3	561781	561782
C 401					
C 402	RR DRIVE AXLE-AIR DRYER	PED MP	2	------	562251
C 403	GALLEY FRIGO NORCOLD	AMP MNL	2	561248	561247
C 404	GALLEY LAMP	AMP MNL	2	561248	561247
C 405					
C 406	FR JCT BOX COMPT.-ABS	AMP MNL	2	560900	560898
C 407	ENGINE COMPT. -SIGNAL	PED WP	6	561606	561607
C 408	ENGINE COMPT. -SIGNAL	PED WP	6	561606	561607
C 409	ENGINE CPT -LOW COOL. LEVEL	PED MP	2	------	562350
C 410	FR JCT BOX-DIODE CONNECTOR	AMP MNL	15	561987	561986
C 411	FR JCT BOX-DIODE CONNECTOR	AMP MNL	15	561987	561986
C 412	LH DASH PANEL-MASTER SWITCH SW	EATON	8	------	562763
C 413	ENG CPT-A/C HI UNLOAD PRS SW	PED WP	2	561566	561690
C 414	RR JCT BOX	AMP MNL	9	561670	561669
C 415	ENGINE CRADLE-FAN SIGNAL	PED WP	3	561781	561782
C 416	ENGINE CRADLE-FAN SIGNAL	PED P-C	3	562237	------
C 417	FRONT JCT BOX-DIODES	AMP MNL	15	561987	561986
C 418	LH DASH PANEL-HTR WINDSH.SW	EATON	8	------	562763
C 419	FR JCT BOX-RETARDER OR JACOB	AMP MNL	3	561667	561550
C 420	ENGINE COMPT. WEBASTO WATER HTR	TC	2	561597	------
C 421	ENGINE COMPT. WEBASTO WATER HTR	TC	1	561073	------
C 422	ENGINE COMPT. WEBASTO WATER HTR	TC	2	561597	------
C 423					
C 424	UNDER INSTRUMENT PANEL CENTER	AMP MNL	3	561667	561550
C 425	FR JCT BOX-DIODES	AMP MNL	15	561987	561986
C 426	ENGINE COMPT. CLUTCH CTR FAN	PED WP	3	561781	561782
C 427					
C 428					
C 429	FR JCT BOX COMPT.	AMP MNL	6	561552	561515
C 430	LH CONSOLE-TIMER	AMP FF	8	561188	562363
C 431	LH CONSOLE-PRE HEAT.	TAB AMP	1	561540	561539
C 432	ENGINE CPT.-PROX. SW. DOOR AJAR	DEUTSCH	4	562479	562477
C 433	FR SERVICE CPT. KNEEL. PRESS. SW	PED WP	2	561566	561690
C 434	FRONT JCT. BOX-DIODES	AMP MNL	15	561987	561986
C 435	FR SERVICE CPT.(RH) KNEEL. PIEZO	AMP MNL	2	560900	560898
C 436	RH HAT RACK-WCL CENTER ROOF ACC	AMP CPC	16	561639	561640
C 437	RH HAT RACK-WCL FR & RR SECT.	AMP CPC	24	561642	561643
C 438					
C 439					
C 440					
C 441					
C 442					
C 443					
C 444					
C 445					
C 446					
C 447					
C 448					
C 449					
C 450	SOUND SYS. JCT. PANEL	MOLEX	4	562507	562503
C 451	WIRELESS MICRO-FIRST CPT BAG	MOLEX	2	562550	562549
C 452	UNDER DASH INSTR. PANEL	MOLEX	2	562550	562549
C 453	SOUND SYS. JCT.PANEL-VCP	PED WP	2	561566	561680
C 454	SOUND SYS.JCT.PAN.-FILT. VCP	PED WP	2	561566	561680
C 455	WIRELESS MICRO-LH HAT-RACK	CINCH	2	562554	562551
C 456	WORLD TRANSM.-RETARDER ACCUM.	PED MP	2	------	562427
C 457	WORLD TRANSM.-MAIN CONNECTOR	DEUTSCH	31	562572	562536
C 458	WORLD TRANSM.-TURBINE SP.SENS	PED MP	2	------	562426

NO	LOCATION	TYPE	CAVITY	#PIN HOUSING	#SOCKET HOUSING
C 459	WORLD TRANSM.-ENGINE SP.SENS.	PED MP	2	------	562426
C 460	WORLD TRANSM.-SPEED SENSOR	ITT	2	------	562541
C 461	WORLD TRANSM.-RETARDER TEMP.	PED MP	2	561566	561680
C 462	WORLD TRANSM.-RETARD SOL."K"	PED MP	2	------	562426
C 463	WORLD TRANSM.-SENSOR CONN.	DEUTSCH	16	562570	562571
C 464	RR JCT BOX-DDR CONNECTOR	DEUTSCH	6	------	562360
C 465	LH CONSOLE-SHIFTER SELECTOR	PED	20	------	562825
C 466	FR SERVICE CPT.-RESIS. MOD.	PED WP	3	------	562428
C 467	FR SERVICE CPT.-RESIS. MOD.	PED WP	3	------	562428
C 468			8		
C 469					
C 470	FR LH UPPER WHELL CPT-SILENT 1000	AMP MNL	2	561248	561247
C 471	FR LH UPPER WHELL CPT-SILENT 1000	AMP MNL	2	561248	561247
C 472	FR LH UPPER WHELL CPT-SILENT 1000	PED WP	2	561566	561690
C 473	FR LH UPPER WHELL CPT-SILENT 1000	AMP MNL	3	561667	561550
C 474	DRIVER CPT.-TEMP. SENSOR	AMP MNL	2	561247	561248
C 475	RR JCT BOX-SPEED SIGN CONNECTOR	AMP MNL	2	561248	561247
C 475M	RR JCT BOX-SPEED SIGN MANUAL TR.	MOLEX	6	562070	562069
C 475W	RR JCT BOX-SPEED SIGN WORLD TR.	MOLEX	6	562070	562069
C 476					
C 477					
C 478	ELECTRONIC DESTINATION SIGN	AMP CPC	9	561636	561637
C 479	HVAC MODULE				
C 480	UNDER DASH LH-DR. FAN SPEED CTR. MOD	PED	4	561889	561890
C 481	UNDER DASH LH-DR. FAN SPEED CTR. MOD	PED	3	561781	561782
C 482					
C 483	FR SERVICE CPT. (NOT USED)	PED PC	2	------	562237
C 484	UNDER DASH LH.-FOOT DAMPER MOTOR	PED PC	2	------	562076
C 485	UNDER DASH LH.-DASH & DEFR. DAM.MOT.	AMP MNL	3	561667	561550
C 486					
C 487					
C 488					
C 489					
C 490					
C 491					
C 492					
C 493					
C 494					
C 495					
C 496					
C 497					
C 498					
C 499					
C 500	FR LH UPPER WHELL CPT -PRODRIVER	MOLEX	6	562070	562069
C 501	FR LH UPPER WHELL CPT -PRODRIVER	PED MP	7	562433	------
C 502	LH DASH PANEL-PRE HEATER SW.	EATON	8	------	562763
C 503	LH CONSOLE-PRE HEATER SW.	EATON	2	------	561837
C 504	LH CONSOLE WEBASTO TIMER	AMP	8	------	562852
C 505	LH CONSOLE ESPAR TIMER	AMP	9	------	562681
C 506	FR JCT BOX CPT. DIGITAL CLOCK	AMP	4	561685	561687
C 507	FR SECT. LH HAT-RACK DIG. CLOCK	MOLEX	4	561477	561476
C 508	RR JCT BOX-FAN CLUTCH RETARDER	AMP MNL	6	561552	561515
C 509	FR LH UPPER WHELL CPT -DATA LOGGER	PED MP	16	------	562530
C 510	FR LH UPPER WHELL CPT -DATA LOGGER	DEUTSCH	9	562531	------
C 511	FR LH UPPER WHELL CPT -DATA LOGGER	PED MP	4	562532	------
C 512	FR LH UPPER WHELL CPT -DATA LOGGER	PED MP	10	562533	------
C 513	FR LH UPPER WHELL CPT -DATA LOGGER	AMP MNL	3	561667	561550
C 514	FR LH UPPER WHELL CPT -DATA LOGGER	PED MP	6	562433	562417
C 515	FR JCT BOX CPT.-INTERCOM	MOLEX	4	561477	561476
C 516	FR JCT BOX CPT.-INTERCOM	MOLEX	6	562070	562069
C 517	LAVATORY WALL-INTERCOM	MOLEX	6	562070	562069
C 519	UNDER DASH RH-SEDAN DOOR	HUMPHREY	2	------	562580
C 520	UNDER DASH RH-SEDAN DOOR	HUMPHREY	2	------	641385
C 521	UNDER DASH RH-SEDAN DOOR	HUMPHREY	2	------	641385
C 522	FR JCT BOX-DAYTIME LTS MODULE	BOSCH	5	------	561183
C 523	FR JCT BOX-FUSE BLOCK	PED	8	562647	562646
C 524	FR JCT BOX-FUSE BLOCK	PED	8	562647	562646

CONNECTORS CODE

NO	LOCATION	TYPE	CAVITY	#PIN HOUSING	#SOCKET HOUSING
C 525	FR JCT BOX-FUSE BLOCK	PED	8	562647	562646
C 526	FR JCT BOX-FUSE BLOCK	PED	8	562647	562646
C 527	FR JCT BOX-FUSE BLOCK	PED	8	562647	562646
C 528	FR JCT BOX-FUSE BLOCK	PED	8	562647	562646
C 529	FR JCT BOX-12V OUTLET	AMP MNL	2	561247	561248
C 530	RR JCT BOX-FUSE BLOCK	PED	8	562647	562646
C 531	RR JCT BOX-FUSE BLOCK	PED	8	562647	562646
C 532	RR JCT BOX-FUSE BLOCK	PED	8	562647	562646
C 533	RR JCT BOX-FUSE BLOCK	PED	8	562647	562646
C 534	RR JCT BOX-FUSE BLOCK	PED	8	562647	562646
C 535	RR JCT BOX-FIRE MODULE DETECT.	AMP MNL	3	561667	561550
C 536	UNDER DASH RH-DRIVER'S HTR TEMP. CTR	AMP MNL	6	561552	561515
C 537	BATT. CPT.-A/C PRESS. SIGN. RLY	AMP MNL	2	561248	561247
C 538	FR SERVICE CPT.-OUTSIDE TEMP. SENSOR	AMP MNL	2	561248	561247
C 539	HVAC DASH MODULE OUTPUT CON	MOLEX	24		562780
C 540	HVAC DASH MODULE INPUT CON	MOLEX	22		562781
C 541	SOUND SYS. JCT PANEL-AUDIO SEAT SYS.	PED WP	2	561566	561690
C 542	LH HAT RACK-AUDIO SEAT SYSTEM	AMP MNL	3	561667	561550
C 543	RR JCT BOX-PARK. BRAKE STOP LTS RESIS.	PED WP	2	561566	561690
C 544	SOUND SYS JCT PANEL-AUDIO SEAT SYS.	PED WP	3	561781	562428
C 545	LH HAT RACK-AUDIO SEAT SYSTEM	AMP MNL	3	561667	561550
C 546					
C 547	RH DASH PANEL-ACCESSORIES	AMP CPC	37	561645	561646
C 548	LH DASH PANEL-T.T. LT. TEST SW.	EATON	8	------	562763
C 549	LH DASH PANEL-FAN CLUTCH OVERR. SW	EATON	8	------	562763
C 550	LAST LUGG. CPT. -WCL RICON	AMP CPC	16	561694	561695
C 551	LAST LUGG. CPT. -WCL RICON	AMP CPC	16	561694	561695
C 552	LAST LUGG. CPT. -WCL RICON	AMP CPC	9	561636	561637
C 553	UNDER DASH R.H. - CONTROL. HEAD	MOLEX	16	---------	562559
C 554	UNDER DASH R.H. - CONTROL. HEAD	MOLEX	16	---------	562559
C 555	UNDER DASH R.H. - CONTROL. HEAD	MOLEX	16	---------	562559
C 556	UNDER DASH R.H. - RADIO ACC.	MOLEX	2	562550	562549
C 557	UNDER DASH R.H. - RADIO ACC.	MOLEX	9	562556	562555
C 558	UNDER DASH R.H. - RADIO ACC.	MOLEX	4	562507	562503
C 559	L.H. HAT RACK - PASSENGER SPK.	MOLEX	4	562507	562503
C 560	SOUND SYS. JCT. PANEL - POWER AMPLI	MOLEX	4	562507	562503
C 561	L.H. HAT RACK - WIRELESS MICRO	MOLEX	4	562507	562503
C 562	L.H. HAT RACK - VCP	MOLEX	9	562556	562555
C 563	L.H MODESTY PANEL - DRIVERS SPK.	MOLEX	4	562507	562503
C 564	L.H MODESTY PANEL - MICRO	MOLEX	4	562507	562503
C 565	R.H MODESTY PANEL - MICRO	MOLEX	4	562507	562503
C 566	L.H. CONSOLE - BOOM MICRO	MOLEX	4	562507	562503
C 567	L.H. CONSOLE - DRIVERS MICRO	MOLEX	4	562507	562503
C 568	SOUND SYS. JCT. PANEL - PASS. SPK	CINCH	4	562553	562552
C 569	SOUND SYS. JCT. PANEL - POWER AMPLI.	MOLEX	9	562556	562555
C 570	UNDER DASH PANEL TTLT	MOLEX	6		562464
C 571	UNDER DASH PANEL TTLT	MOLEX	20		562778
C 572	UNDER DASH PANEL TTLT	MOLEX	18		562779
C 573	UNDER DASH PANEL TTLT	MOLEX	16		562465
C 574	HAT -RACK FLUOR. INDIRECT LIGHTING	MOLEX	6	----------	562759
C 575	HAT -RACK FLUOR. INSTATION LIGHT	MOLEX	4	562507	562503
C 576	HAT -RACK FLUOR. INDIRECT LIGHTING	AMP MNL	3	561667	561550
C 577	HAT -RACK FLUOR. INDIRECT LIGHTING	AMP MNL	3	561667	561550
C 578	HAT -RACK FLUOR. INSTATION LIGHT	MOLEX	4	562507	562503
C 579					
C 580	RH DASH PANEL-HAT RACK FAN SW	EATON	8	--------	562763
C 581					
C 582	FRONT SERVICE CMPT. - WINDOWS AJAR	PED WP	2	561566	561690
C 583	L.H. DASH PANEL - MASTER KEY	DEUTSCH	2	562486	562485
C 584	FRONT SERVICE CMPT. - AIR HORH	HUMPHREY	3	--------	641385
C 585					
C 586					
C 587					
C 588	FRONT SERVICE CPT. CENTER SOUND SYS.	AMP. CPC	37	561645	561646
C 589	UNDER DASH - L.H. MIRROR	AMP MNL	9	561670	561669
C 590	UNDER DASH - R.H. MIRROR	AMP MNL	9	561670	561669
C 591	L.H.CONSOLE - MIRROR L.H.	EURAMTEC	8	--------	562799

NO	LOCATION	TYPE	CAVITY	#PIN HOUSING	#SOCKET HOUSING
C 592	L.H.CONSOLE - MIRROR R.H.	EURAMTEC	8	--------	562799
C 593	BATTERY CMPT. - CHARGER	PED WP	3	561781	561782
C 594	FRONT ROOF - DRIVERS LIGHT	LEEKRAFT		---------	562803
C 595	DASH CENTER MODULE - OPEN DOOR	MOLEX	4	561477	561476
C 596	DASH CENTER MODULE - CLOSE DOOR	MOLEX	4	561477	561476
C 597	L.H. DASH PANEL - DISPLAY SET SW.	MOLEX	5		562812
C 598	L.H. DASH PANEL - DISPLAY SET SW.	MOLEX	5		562812
C 599					
C 600	ENGINE CPT.-A/C LOW PRESS SW. UNLOAD	PED	2	562348	562471
C 601	L.H. ROOF - WINDOW AJAR	AMP MNL	2	561248	561247
C 602	L.H. ROOF - WINDOW AJAR	MOLEX	4	561477	561476
C 603	R.H. ROOF - WINDOW AJAR	AMP MNL	2	561248	561247
C 604					
C 605	HAT RACK - MOTOR FAN	PED	2	560997	561030
C 606	HAT RACK - MOTOR FAN	PED	2	560997	561030
C 607	FRONT SERVICE CMPT. RPM SIGNAL	PED WP	2	561566	561690
C 608	FRONT SERVICE CMPT. SPEED SIGNAL	PED WP	2	561566	561690
C 609	LAVATORY - NIGHT LIGHT				
C 610	RR JCT BOX	AMP MNL	6	561552	561515
C 611	HAT RACK READING LTS RICON	MOLEX	6	562558	562557
C 612	HAT -RACK FLUOR. INSTATION LTS RICON	MOLEX	4	562507	562503
C 613	HAT -RACK INDIRECT LTS RICON	AMP MNL	3	561667	561550
C 614	HAT -RACK INDIRECT LTS RICON	AMP MNL	3	561667	561550
C 615					
C 616					
L X	CLUSTER	JAE	22		562766
L Y	CLUSTER	JAE	30		562767
R X	CLUSTER	JAE	22		562764

CONNECTORS CODE

NO	LOCATION	TYPE	CAVITY	#PIN HOUSING	#SOCKET HOUSING
C AA1	BEHIND DASH - SONALERT	BOSCH	5		561183
C AA2	BEHIND DASH - SONALERT	BOSCH	5		561183
C X1	FR LH UPPER WHELL CPT-ABS	WABCO	18		562792
C X2	FR LH UPPER WHELL CPT-ABS	WABCO	6		562793
C X3	FR LH UPPER WHELL CPT-ABS	WABCO	9		562794
C X4	FR LH UPPER WHELL CPT-ABS	WABCO	15		562795`
C S	RR JCT BOX ECU WORLD TR.	PED	32		562817
C T	RR JCT BOX ECU WORLD TR.	PED	32		562824
C V	RR JCT BOX ECU WORLD TR.	PED	32		562823
CV I2	RR JCT BOX-WORLD TRANSM. & EATON	AMP CPC	9	561636	561637
C Y	CLUSTER	JAE	30		562765
C 1	FR JCT BOX COMPARTMENT	AMP CPC	14	561585	561584
C 2	FR JCT BOX COMPARTMENT	AMP CPC	16	561639	561640
C 3	FR JCT BOX COMPARTMENT	AMP CPC	24	561641	561643
C 4	FR JCT BOX COMPARTMENT	AMP CPC	37	561644	561646
C 5	FR SERVICE COMPT.-UNDERNEATH	AMP CPC	37	561644	561646
C 6	FR SERVICE COMPT.-UNDERNEATH	AMP CPC	16	561639	561640
C 7					
C 8	FR SERVICE COMPT.-UNDERNEATH	AMP CPC	24	561641	561643
C 9	FR SERVICE COMPT.-UNDERNEATH	AMP CPC	24	561641	561643
C 10					
C 11	FR SERVICE COMPARTMENT	AMP CPC	37	561644	561646
C 12	FR SERVICE COMPARTMENT	AMP CPC	16	561639	561640
C 13	LH CONSOLE-CTR MIRROR	AMP MNL	6	561552	561515
C 14	UNDER DASH-LH MIRROR	AMP MNL	9	561661	561662
C 15	RR JCT BOX	AMP CPC	24	561641	561643
C 16	LH CONSOLE SW-CRUISE ON OFF	EATON	10	------	562763
C 17	LH CONSOLE SW-CRUISE RESUME	EATON	10	------	562763
C 18	LH CONSOLE SW-CRUISE SET	EATON	10	------	562763
C 19	LH CONSOLE DECEL SW	EATON	10	------	562763
C 20	RR JCT BOX	AMP CPC	37	561644	561646
C 21	RR JCT BOX	AMP CPC	24	561641	561643
C 22	RR JCT BOX - EATON TRANSM.	AMP MNL	6	561552	561515
C 23	DDEC ENGINE-ECM J1939	PED MP	6	-------	561962
C 24	DDEC ENGINE	PED WP	1	561605	561577
C 25	RR JCT BOX - EATON TRANSM. J1939	DEUTCH	3	562877	562884
C 26	HYD & MAN TRANSM.-NEUT.& B/U	PED WP	4	561610	561611
C 27	HYD & MAN TRANSM.-SPEED SENS.	PED WP	2	561566	561690
C 28	EATON TRANSMISSION	DEUTCH	3	562877	562884
C 29	EATON TRANSMISSION	PED MP	6	562878	------
C 30	RR JCT BOX - ECU EATON TRANSM.	PED MP	32	------	562866
C 31	RR JCT BOX - ECU EATON TRANSM.	PED MP	24	------	562865
C 32	DDEC ENGINE-ECM	PED	30	------	561600
C 33	RR JCT BOX - EATON TRANSM.	DEUTCH	9	562531	------
C 34	RH. CONSOLE - EATON TRANSM. SHIFTER	PED MP	3	------	562871
C 35	RR JCT BOX	AMP CPC	24	561642	561643
C 36	RH. CONSOLE - EATON TRANSM. SHIFTER	PED MP	24	------	562874
C 37	RR SECTION-LH HAT RACK	MOLEX	6	562558	562557
C 38	RR SECTION-RH HAT RACK	MOLEX	6	562558	562557
C 39	LH CONSOLE - EATON TRANSM. DISPLAY	AMP MNL	4	561551	561668
C 40	RR JCT BOX - EATON TRANSM. J1939	DEUTCH	3	562877	562884
C 41	LAVATORY ROOF FLUORESCENT	AMP MNL	2	560900	560898
C 42	LAVATORY BACK WALL-WTR TANK	AMP MNL	2	560900	560898
C 43	LAVATORY BACK WALL-ACCES.	AMP MNL	9	561661	561662
C 44	EATON TRANSM. J1939	DEUTCH	3	562877	562884
C 45	FR JCT BOX COMPARTMENT	AMP CPC	24	561642	561643
C 46	EATON TRANSM. J1939	DEUTCH	3	562877	562884
C 47	FR SERVICE COMPARTMENT	AMP CPC	16	561694	561695
C 48					
C 49	BATTERIE COMPT.-LT	AMP MNL	2	561248	561247
C 50	FR SERVICE COMPT.-LOW BUOY	PED WP	1	561605	561577
C 51					
C 52	RR JCT BOX	AMP CPC	22	561709	561710
C 53					
C 54					
C 55	RH SWITCH PANEL	AMP CPC	9	561636	561637
C 56					

NO	LOCATION	TYPE	CAVITY	#PIN HOUSING	#SOCKET HOUSING
C 57					
C 58	RR JCT BOX AC PANEL	DEUTSCH	24	562280	562283
C 59	RR JCT BOX AC PANEL	AMP CPC	14	561584	561583
C 60	RR JCT BOX COMPT.-LT	AMP MNL	2	561248	561247
C 61	LUGGAGE COMPARTMENT LTS	AMP MNL	2	561248	561247
C 62	LUGGAGE COMPARTMENT LTS	AMP MNL	2	561248	561247
C 63	LUGGAGE COMPARTMENT LTS	AMP MNL	2	561248	561247
C 64	LUGGAGE COMPARTMENT LTS	AMP MNL	2	561248	561247
C 65	LUGGAGE COMPARTMENT LTS	AMP MNL	2	561248	561247
C 66	LUGGAGE COMPARTMENT LTS	AMP MNL	2	561248	561247
C 67	LUGGAGE COMPARTMENT LTS	AMP MNL	2	561248	561247
C 68	LUGGAGE COMPARTMENT LTS	AMP MNL	2	561248	561247
C 69	RR AXLE ACC-INSIDE PVC END	PED WP	6	561568	561578
C 70	LH CONSOLE	AMP CPC	16	561642	561643
C 71	FR JCT BOX COMPARTMENT	AMP CPC	37	561645	561646
C 72	FR JCT BOX COMPARTMENT	AMP CPC	24	561642	561643
C 73	DASH CENTER PANEL	AMP CPC	16	561639	561640
C 74	FR JCT BOX COMPARTMENT	AMP CPC	37	561645	561646
C 75					
C 76	LUGGAGE COMPT.-AIR RET.SENS.	AMP MNL	2	561248	561247
C 77	LUGGAGE COMPT.-AIR RET.SENS.	AMP MNL	2	561248	561247
C 78					
C 79					
C 80	LUGGAGE COMPT.-AIR RET.SENS.	AMP MNL	2	561248	561247
C 81	PASSENGER COMPT.-AISLE LTS	AMP MNL	2	560900	560898
C 82	ENTRANCE DOOR	MOLEX	6	562070	562069
C 83	ENTRANCE DOOR-PROIMITY SW	MOLEX	4	561477	561476
C 84	ENTRANCE DOOR-PRESSURE SW	PED WP	2	561566	561690
C 85	UNDER INSTRUMENT PANEL LH	AMP MTA-100	------	562248	------
C 86					
C 87	RR END ROOF	AMP CPC	9	561636	561637
C 88	RR END ROOF-CLEARANCE LTS	AMP MNL	2	560900	560898
C 89	RR END ROOF-B/U NONITOR	AMP CPC	4	561582	561581
C 90	RR JCT BOX	AMP CPC	15	561987	561986
C 91	RR JCT BOX	AMP CPC	37	561714	561713
C 92	FR LH UPPER WHELL CPT-ABS	AMP CPC	9	561635	561637
C 93	FR LH UPPER WHELL CPT-ABS		35	------	641094
C 94					
C 95	CONDENSOR CPT - LIQ. SOL. VALVE	PED WP	2	561566	561690
C 96	FR AXLE ACCESSORIES	AMP CPC	14	561585	561585
C 97	RR AXLE ACC-INSIDE PVC END	PED WP	6	561568	561578
C 98	FR SERVICE COMPT-EL.FT.PEDAL	PED WP	3	561782	561781
C 99	FR SERVICE COMPT LTS	AMP MNL	2	561248	561247
C 100	LH CONSOLE – 120 VOLTS SWITCH	EATON	8	------	562763
C 101	FR SERVICE COMPT-ELEC. HORNS	PED WP	2	561566	561690
C 102	FR SERV & SIDE CPT-FLASH. LH	GROTE	2	------	562155
C 103	FR SERV & SIDE CPT-MARKERS	GROTE	2	------	562155
C 104	FR SERV & SIDE CPT-FLASH. RH	GROTE	2	------	562155
C 105	FR SERVICE COMPT-LIQ.S.VALVE	PED WP	2	561566	561690
C 106	FR SERVICE COMPT-WATER VALVE	PED WP	2	561566	561690
C 107	EVAPORATOR COMPT-DAMPER	PED WP	2	561566	561690
C 108	FR SERVICE COMPT-KNEEL.SYS	PED WP	2	561566	561690
C 109	FR SERVICE COMPT-KNEEL.SYS	PED WP	2	561566	561690
C 110	FR SERVICE COMPT-KNEEL.SYS	PED WP	2	561566	561690
C 111	EVAPORATOR COMPT-DAMPER	DEUTSCH	2	562486	562485
C 112	EVAPORATOR COMPT-SPEED MOT CTRL	DEUTSCH	5	------	562566
C 113	BATT. & RR J.B.CPT.MARKER LT	GROTE	2	------	562155
C 114	RR J. BOX CPT DOOR DIR LT LH	GROTE	2	------	562155
C 115	ENGINE COMPT-AIR DRYER	PED WP	2	561566	561690
C 116	ENGINE COMPT. LTS	PED WP	1	561605	561577
C 117					
C 118	ENGINE COMPT-LAVATORY FAN	PED WP	2	561566	561690
C 119	ENGINE CPT RR DOOR RH LO LAMP	PED WP	6	561606	561607
C 120	ENGINE CPT RR DOOR LH LO LAMP	PED WP	6	561606	561607
C 121	BATTERIE CPT. DOOR DIR LT RH	GROTE	2	------	562155
C 122	ENGINE CPT-UNLOAD TAG SYSTEM	PED WP	2	561566	561690
C 123	TAG AXLE-UNLOAD TAG RH VALVE	PED WP	2	561566	561690

CONNECTORS CODE

NO	LOCATION	TYPE	CAVITY	#PIN HOUSING	#SOCKET HOUSING
C 124	ENGINE CPT-ETHER SW	PED WP	2	561566	561690
C 125	ENGINE CPT-B/U ALARM	PED WP	2	561566	561690
C 126	ENGINE CPT-FLUSHING PUMP	PED WP	2	561566	561690
C 127	ENGINE CPT-FUEL FILTER	PED WP	2	561566	561690
C 128	ENGINE CPT-A/C COMPR.CLUTCH	ITT SS	2	561813	561812
C 129	ENGINE CPT-PRE-HEAT WATER	AMP FF	6	561672	561186
C 130	ENGINE CPT-UNLOADER	ITT SS	2	561813	561812
C 131	ENGINE CPT-UNLOADER	ITT SS	2	561813	561812
C 132	ENGINE CPT-A/C LO PRESS SW	PED WP	2	561566	561690
C 133	ENGINE CPT-A/C HI PRESS SW	PED WP	2	561566	561690
C 134	FR JCT BOX-LUGGAGE DIODE CON.	AMP MNL	15	561987	561986
C 135	FR JCT BOX-LUGGAGE DIODE CON.	AMP MNL	15	561987	561986
C 136	RR JCT BOX - A/C PANEL DIODE CONN.	AMP MNL	15	561987	561986
C 137	RR JCT BOX-TRANSMITTER	AMP MNL	2	560900	560898
C 138	RR JCT BOX-CONTROL MODULE	AMP HDP	15	------	562012
C 139	RR JCT BOX-LOGIC MODULE	AMP HDP	15	562011	------
C 140	HVAC DASH MODULE THERMOMETER	MOLEX	4		562782
C 141	INSTRUMENT PANEL LH UNLOAD TAG	AMP	2	561248	561247
C 142	LAVATORY DOOR WALL	AMP MNL	2	561248	561247
C 143	LAVATORY DOOR WALL	AMP MNL	3	560908	562006
C 144	UNDER LH SEAT-AISLE LTS	AMP MNL	4	560851	560852
C 145	RR JCT BOX CPT-RR SIDE LTS	AMP MNL	9	561670	561669
C 146	ENGINE CPT-MODULATOR VALVE	AMPHENOL	2	------	560412
C 147	BATT & RR J.B.CPT-DOCK.LTS	PED WP	2	561566	561690
C 148					
C 149	CONDENSER CPT-FAN MOTOR	ORDNANCE	3	562555	562001
C 150					
C 151	EVAPORATOR CPT-THERMOSTAT	ITT SS	2	561813	562159
C 152	CONDENSER CPT-FUEL GAUGE	PED WP	4	561610	561611
C 153	EVAPORATOR CPT-AIR AMB. SENS	AMP MNL	2	561248	561247
C 154	EVAPORATOR CPT-FRESH AIR SENS	ITT SS	2	561813	561812
C 155	EVAPORATOR CPT-WATER VALVE	PED WP	4	561610	561611
C 156	EVAPOR. CPT-BYPASS WATER VAL.	PED WP	2	561566	561690
C 157	EVAPORATOR CPT-WATER PUMP	PED WP	2	561566	561690
C 158	CONDENSER CPT-A/C LO TEMP.	PED WP	2	561566	561690
C 159	CONDENSER CPT-A/C HI TEMP.	PED WP	2	561566	561690
C 160	FR AXLE-ABS RH SENSOR	WABCO	2	641132	------
C 161	FR AXLE-ABS RH VALVE	WABCO	3	------	641098
C 162	FR AXLE-ABS LH VALVE	WABCO	3	------	641098
C 163	FR AXLE-ABS LH SENSOR	WABCO	2	641132	------
C 164	RR AXLE-ABS LH SENSOR	WABCO	2	641132	------
C 165	RR AXLE-ABS LH VALVE	WABCO	3	------	641098
C 166	RR AXLE-ABS RH VALVE	WABCO	3	------	641098
C 167	RR AXLE-ABS RH SENSOR	DEUTSCH	2	641132	------
C 168	RR AXLE-ABS OPT ATC	PED WP	2	561566	561690
C 169	RR JCT BOX-SPEED SW	AMP HDP	15	------	562012
C 170	FR JCT BOX-FLASHER UNIT	TC	2	------	561940
C 171	LH CONSOLE	AMP CPC	24	561642	561643
C 172	ENGINE COMPT-WATER TANK HEAT.	PED WP	2	561566	561690
C 173	LAV.POTABLE-WATER TANK HEAT.	AMP MNL	2	560900	560898
C 174	UNDER DASH RH-HTR MODULE	AMP MNL	9	561670	561669
C 175	UNDER DASH RH-HTR MODULE	AMP MNL	9	561670	561669
C 176	UNDER DASH RH-WIPER PULSE	AMP FF	6	------	561186
C 177	UNDER DASH RH-WIPER MOTOR	AMP FF	6	------	561186
C 178	UNDER DASH RH-LH FAN	TC	2	561030	560997
C 179	UNDER DASH RH-RH FAN	TC	2	561030	560997
C 180	RR JCT BOX-DIODE CONNECTOR	AMP MNL	15	561987	561986
C 181	RR JCT BOX-DIODE CONNECTOR	AMP MNL	15	561987	561986
C 182					
C 183	FR SERVICE CPT-KNEELING PAN.	PED WP	4	561610	561611
C 184	FR SERVICE CPT-KNEELING SW	ITT SS	3	561111	561080
C 185					
C 186	RR JCT BOX CPT.-SPEED SIGN.TR	PED WP	2	561566	561690
C 186M	RR JCT BOX CPT.-SPD SIGN. M.TR	PED WP	2	561566	561690
C 186W	RR JCT BOX CPT.-SPD SIGN. WT	PED WP	2	561566	561690
C 187	FR JCT BOX-RPM RESISTOR CON.	AMP MNL	6	561552	561515
C 188					

NO	LOCATION	TYPE	CAVITY	#PIN HOUSING	#SOCKET HOUSING
C 189	ENGINE CPT RR DOOR B/U LT	PED WP	2	561566	561690
C 190	ENGINE CPT RR DOOR TAIL LT	PED WP	2	561566	561690
C 191	ENGINE CPT RR DOOR RH STOP LT	PED WP	2	561566	561690
C 192	ENGINE CPT RR DOOR RH DIR. LT	PED WP	2	561566	561690
C 193					
C 194	ENGINE CPT RR DOOR LH DIR. LT	PED WP	2	561566	561690
C 195	ENGINE CPT RR DOOR LH STOP LT	PED WP	2	561566	561690
C 196	ENGINE CPT RR DOOR CYCLOP LT	PED WP	2	561566	561690
C 199	ENGINE CPT RR DOOR LICENCE LT	DOM AUTO	2	930210	------
C 200	RH HAT RACK-FLUORESCENT	AMP MNL	2	561248	561247
C 201	RH HAT RACK-FLUORESCENT	AMP MNL	2	561248	561247
C 202	RH HAT RACK-INDIRECT LIGHTING	MOLEX	2	--------	562758
C 203	RH HAT RACK-INDIRECT LIGHTING	MOLEX	6	--------	562759
C 204	RH HAT RACK-GENERAL LT	AMP MNL	2	560900	560898
C 205	FR SECT.-RH HAT RACK SPEAKER	AMP MNL	9	561661	561662
C 206	RH HAT RACK-READING LT	AMP FF	4	----------	562756
C 207	LH HAT RACK-READING LT	AMP FF	4	----------	562756
C 208	LH HAT RACK-BALLAST	MOLEX	2	----------	562758
C 209	LH HAT RACK HOTESS CHIME	AMP MNL	3	561667	561550
C 210	FR SECT.-LH HAT RACK SPEAKER	AMP MNL	9	561661	561662
C 211	FR ROOF-STORE LH	AMP MNL	2	560900	560898
C 212	FR ROOF-STORE RH	AMP MNL	2	560900	560898
C 213	FR ROOF-CLEARANCE LT	AMP MNL	2	560900	560898
C 214	ENGINE CPT J1922				
C 215	TAG AXLE - A.T.C. SYSTEM				
C 216	TAG AXLE - A.T.C. SYSTEM				
C 217	RH DASH PANEL-FRONT CAMERA SW	EATON	8	--------	562763
C 218	RH DASH PANEL-FRONT CAMERA SW	AMP MNL	2	560900	560898
C 219					
C 220	RR.JCT.BOX-FUEL PRIME PUMP	TC	1	561070	561073
C 221					
C 222					
C 223					
C 224					
C 225					
C 226					
C 227					
C 228					
C 229					
C 230	ENG.CPT.-FUEL PRIME PUMP FEED	DEUTSCH	2	562486	562485
C 231	ENG.CPT.-FUEL PRIME PUMP SW.	PED WP	2	561566	561690
C 232	ENG.CPT.-FUEL PRIME PUMP	PED WP	2	561566	561690
C 233	FR. SERVICE COMPT.	VDO	8		562043
C 234	FR. SERVICE COMPT.	VDO	8		562044
C 235	FR. SERVICE COMPT.	VDO	8		562041
C 236	LUGGAGE COMPARTEMENT	AMP MNL	4	560851	560852
C 237	UNDER DASH LH-JACOB CLUTCH SW	ITT SS	3	561111	561080
C 238	RR JCT BOX-DIODE CONNECTOR	AMP MNL	9	561670	561669
C 239	FR SERVICE CPT-HI BUOY VALVE	PED WP	2	561566	561690
C 240	FR SERVICE CPT-KNEEL PROX SW	PED WP	2	561566	561690
C 241					
C 242	FR SERVICE CPT-MARK & DIR LT	ITT SS	3	561111	561080
C 243	FR SERVICE CPT-HEADLAMPS	TC	3	------	561071
C 244	FR SERVICE CPT-LH FOG LAMP	ITT SS	2	561813	561812
C 245	FR SERVICE CPT-RH FOG LAMP	ITT SS	2	561813	561812
C 246	FR SERVICE CPT-MARK & DIR LT	ITT SS	3	561111	561080
C 247					
C 248	FR JCT BOX-WIPER PULSE GEN	AMP FF	6	------	561108
C 249					
C 250					
C 251	LH DASH PANEL-FAST IDLE SW	EATON	8	------	562763
C 252					
C 253	LH DASH PANEL-ETHER SW	EATON	8	------	562763
C 254	INST. PANEL RH-ENTR.DOOR SW.	TORRIX	5	------	562110
C 255	LH DASH PANEL-JACOB & RETARDER SW	EATON	8	------	562763
C 256					
C 257					

CONNECTORS CODE

NO	LOCATION	TYPE	CAVITY	#PIN HOUSING	#SOCKET HOUSING
C 258	LH SW PANEL-MULTI FUNC. SW	AMP FF	8	561188	------
C 259	LH SW PANEL-MULTI FUNC. SW	AMP FF	6	------	561108
C 260	FR SERVICE CPT-LUG DOOR LCK	PED WP	6	561606	561607
C 261	UNDER DASH RH-DOOR MODULE	AMP MNL	9	561670	561669
C 262	UNDER DASH RH-DOOR MODULE	AMP MNL	4	561551	561668
C 263	UNDER DASH RH-DOOR MODULE	AMP MNL	3	561667	561550
C 264	UNDER DASH RH-DOOR MODULE	AMP MNL	3	561667	561550
C 265	UNDER DASH RH-DOOR MODULE	AMP HDP-20	15	562011	562012
C 266					
C 267	UNDER DASH RH	AMP CPC	24	561642	561643
C 268	UNDER DASH LH-MIRROR	AMP MNL	6	561552	561515
C 269	UNDER DASH RH-MIRROR	AMP MNL	6	561552	561515
C 270	LH MIRROR POST	MOLEX	6	562070	562069
C 271	RH MIRROR POST	MOLEX	6	562070	562069
C 272	LH MIRROR	SPARTAN	6	------	990158
C 273	RH MIRROR	SPARTAN	6	------	990158
C 274	RR. JCT. BOX – SIGNAL ALT. MODULE				
C 275	UNDER DASH RH-DOOR MODULE	AMP MNL	9	561670	561669
C 276	UNDER DASH RH-LOCK SOL.VALVE	AMP MNL	2	561248	561247
C 277					
C 278					
C 279	UNDER DASH CYLINDER READ SW.	AMP MNL	2	561248	561247
C 280	LH CONSOLE-UNLOAD TAG SW.	NGR	10	------	562763
C 281					
C 282					
C 283					
C 284					
C 285					
C 286	RH SW PANEL-A/C & HEAT	EATON	8	------	562763
C 287	ENGINE COMPT-LTS SW	PED WP	2	561566	561690
C 288	RH SW PANEL-FRESH AIR	EATON	8	------	562763
C 289					
C 290					
C 291					
C 292					
C 293					
C 294					
C 295					
C 296					
C 297	INSTRUMENT PANEL RH -LTS	AMP MNL	2	560900	560898
C 298					
C 299	RH DASH PANEL SW-GALLEY	EATON	8	------	562763
C 300					
C 301					
C 302					
C 303					
C 304					
C 305					
C 306					
C 307					
C 308	LH CONSOLE SW-RHEOSTAT	TC	2	561030	560997
C 309	DDEC ENGINE-ECM POWER CON.	PED MP	5	------	562345
C 310	LH DASH PANEL -LUG. DOOR LCK SW	EATON	8	------	562763
C 311	RH DASH PANEL -HOS & PAS CHIME SW	EATON	8	------	562763
C 312	RH DASH PANEL -READING LTS SW	EATON	8	------	562763
C 313	RH DASH PANEL -GEN & FLUOR LTS SW	EATON	8	------	562763
C 314	LH DASH PANEL-FR DEST. SIGN SW	EATON	8	------	562763
C 315	LH DASH PANEL-LH STORE SW	EATON	8	------	562763
C 316	LH CONSOLE SPARE SWITCH	EATON	8	------	562763
C 317	LH DASH PANEL-RH STORE SW	EATON	8	------	562763
C 318	LH CONSOLE SW-DRV WINDOW LIFT	EATON	8	------	562763
C 319					
C 320	RH DASH PANEL-DRIVER'S LTS SW	EATON	8	------	562763
C 321					
C 322	LH CONSOLE DRV WIND LIFT MOT	PED PO	2	------	561848
C 323	LH CONSOLE CRUISE CTR SW PAN. AMP	CPC	9	561636	561637
C 324					

NO	LOCATION	TYPE	CAVITY	#PIN HOUSING	#SOCKET HOUSING
C 325	LH DASH PANEL-KNEELING SW	EATON	8	------	562763
C 326	LH CONSOLE SW-SPARE	EATON	8	------	562763
C 327	ENGINE CONTROL	DEUTSCH	6	562583	562581
C 328	GALLEY-LAMP	AMP MNL	2	561248	561247
C 329	ENGINE TACHO SIGNAL	PED WP	3	561781	561789
C 330					
C 331	GALLEY MICROWAVE SW	EATON	8	------	562763
C 332					
C 333	GALLEY RH CONTAINER SW	EATON	8	------	562763
C 334	GALLEY LH CONTAINER SW	EATON	8	------	562763
C 335					
C 336					
C 337	INSTR PANEL LH-UP WIPER SW	EATON	8	------	562763
C 338	INSTR PANEL LH-UP DEFROST SW	EATON	8	------	562763
C 339	INSTR PANEL LH-UP WASHER SW	EATON	8	------	562763
C 340	FR JCT. BOX FIRE PIEZO ALARM	AMP MNL	2	560900	560898
C 341	INSTR PANEL LH-HEAT MIRROR SW	EATON	8	------	562763
C 342	ENGINE RR START SW	DEUTSCH	2	562586	562585
C 343	INSTR PANEL LH-HEADLAMP SW	EATON	8	------	562763
C 344	INSTR PANEL LH-HAZARD LT SW	EATON	8	------	562763
C 345	INSTR PANEL LH-FOG LT SW	EATON	8	------	562763
C 346					
C 347	INSTR PANEL LH-DASH LT SW	AMP MNL	2	560900	560898
C 348	INSTR PANEL CENT-RACOR MODULE	MOLEX	6	562070	562067
C 349					
C 350	RH CONSOLE-THERMOMETER	AMP MNL	3	561667	561550
C 351	LH HAT RACK-FLUOR 110V	MOLEX	4	561477	561476
C 352	RH CONSOLE-DRV TEMP SENSOR	BURNDY	4	------	561104
C 353	INSTR PANEL RH-DRV FAN RHEOST	AMP MNL	6	561552	561515
C 354	INSTR PANEL RH-DRV TEMP CTR	AMP MNL	6	561552	561515
C 355	INSTR PANEL RH-FR TEMP CTR	AMP MNL	3	561667	561550
C 356					
C 357	INSTR PANEL RH-WATER TEMP GA	AMP MNL	3	561667	561550
C 358	INSTR PANEL RH-FUEL LEVEL GA	AMP MNL	3	561667	561550
C 359					
C 360					
C 361	FR ROOF-WIPER MOTOR	AMP FF	6	------	561186
C 362	FR ROOF-LAVATORY OCCUPIED LT	AMP MNL	2	561248	561247
C 363	FR ROOF-WATCH YOUR STEP LT	AMP MNL	2	561248	561247
C 364	FR ROOF-DESTINATION SIGN	AMP MNL	3	561667	561550
C 365	FR ROOF-UP WINDSHIELD DEFROST	AMP MNL	3	561667	561550
C 366	RH DASH PANEL-GRN & RED LEDS	AMP MNL	3	560908	562006
C 367	ENGINE COMPT-DIF OIL T SENSOR	PED WP	2	561566	561690
C 368	FR ROOF-DEST. SIGN BALLAST	AMP MNL	3	561667	561550
C 369	FR ROOF-DEST. SIGN OPER. SW	TORRIX	5	------	562110
C 370	FR ROOF-DEST. SIGN FLUOR.	AMP MNL	2	560900	560898
C 371	FR ROOF-DEST. SIGN FLUOR.	AMP MNL	2	560900	560898
C 372	FR ROOF-DEST. SIGN SPEED SW	MOLEX	4	561477	561476
C 373	FR ROOF-NO SMOKING LT	AMP MNL	2	561248	561247
C 374	LH SWITCH PANEL	AMP MNL	6	561552	561515
C 375					
C 376					
C 377	LH DASH PANEL-STOP ENG.OVERIDE SW	EATON	8	------	562763
C 378					
C 379					
C 380	LH CONSOLE-DDR CONNECTOR	DEUTSCH	6	562360	------
C 381					
C 382					
C 383					
C 384					
C 385					
C 386	LH DASH PANEL-WCL POWER SYSTEM SW	EATON	8	------	562763
C 387	RR JCT BOX (WCL)	AMP MNL	9	561661	561662
C 388	RR JCT BOX (WCL)	AMP MNL	12	561735	561734
C 389	WCL REAR DOOR	MOLEX	4	561477	561476
C 390	LAVATORY WALL-WCL REMOTE CTR	EATON	8	------	562763
C 391	LAVATORY WALL-WCL LAMP	EATON	8	------	562763

CONNECTORS CODE

NO	LOCATION	TYPE	CAVITY	#PIN HOUSING	#SOCKET HOUSING
C 392	LAVATORY WALL-WCL SW. LT.	EATON	2	------	561835
C 393	LAVATORY WALL-WCL REMOTE SYS.	AMP CPC	4	561686	561687
C 394	UNDER INSTR. PANEL- B/U MONITOR	AMP MNL	4	560851	560852
C 395	DRIVER'S COMPT. - B/U MONITOR	AMP	5	------	------
C 396	FR SECT. LH HAT RACK-SPEAKER	MOLEX	4	562507	562503
C 397	ENGINE COMPT. CRADLE ACC.	DEUTSCH	40	562281	562284
C 398					
C 399	ENGINE COMPT. – PRE-EXITATION ALT.	PED WP	2	561566	561690
C 400	ENGINE COMPT. BLOCK HEATER	PED MP	3	561781	561782
C 401					
C 402	RR DRIVE AXLE-AIR DRYER	PED MP	2	------	562251
C 403	GALLEY FRIGO NORCOLD	AMP MNL	2	561248	561247
C 404	GALLEY LAMP	AMP MNL	2	561248	561247
C 405					
C 406	FR JCT BOX COMPT.-ABS	AMP MNL	2	560900	560898
C 407	ENGINE COMPT. -SIGNAL	PED WP	6	561606	561607
C 408	ENGINE COMPT. -SIGNAL	PED WP	6	561606	561607
C 409	ENGINE CPT -LOW COOL. LEVEL	PED MP	2	------	562350
C 410	FR JCT BOX-DIODE CONNECTOR	AMP MNL	15	561987	561986
C 411	FR JCT BOX-DIODE CONNECTOR	AMP MNL	15	561987	561986
C 412	LH DASH PANEL-MASTER SWITCH SW	EATON	8	------	562763
C 413	ENG CPT-A/C HI UNLOAD PRS SW	PED WP	2	561566	561690
C 414	RR JCT BOX	AMP MNL	9	561670	561669
C 415	ENGINE CRADLE-FAN SIGNAL	PED WP	3	561781	561782
C 416	ENGINE CRADLE-FAN SIGNAL	PED P-C	3	562237	------
C 417	FRONT JCT BOX-DIODES	AMP MNL	15	561987	561986
C 418	LH DASH PANEL-HTR WINDSH.SW	EATON	8	------	562763
C 419	FR JCT BOX-RETARDER OR JACOB	AMP MNL	3	561667	561550
C 420	ENGINE COMPT. WEBASTO WATER HTR	TC	2	561597	------
C 421	ENGINE COMPT. WEBASTO WATER HTR	TC	1	561073	------
C 422	ENGINE COMPT. WEBASTO WATER HTR	TC	2	561597	------
C 423					
C 424	UNDER INSTRUMENT PANEL CENTER	AMP MNL	3	561667	561550
C 425	FR JCT BOX-DIODES	AMP MNL	15	561987	561986
C 426	ENGINE COMPT. CLUTCH CTR FAN	PED WP	3	561781	561782
C 427					
C 428					
C 429	FR JCT BOX COMPT.	AMP MNL	6	561552	561515
C 430	LH CONSOLE-TIMER	AMP FF	8	561188	562363
C 431	LH CONSOLE-PRE HEAT.	TAB AMP	1	561540	561539
C 432	ENGINE CPT.-PROX. SW. DOOR AJAR	DEUTSCH	4	562479	562477
C 433	FR SERVICE CPT. KNEEL. PRESS. SW	PED WP	2	561566	561690
C 434	FRONT JCT. BOX-DIODES	AMP MNL	15	561987	561986
C 435	FR SERVICE CPT.(RH) KNEEL. PIEZO	AMP MNL	2	560900	560898
C 436	RH HAT RACK-WCL CENTER ROOF ACC	AMP CPC	16	561639	561640
C 437	RH HAT RACK-WCL FR & RR SECT.	AMP CPC	24	561642	561643
C 438					
C 439					
C 440					
C 441					
C 442					
C 443					
C 444					
C 445					
C 446					
C 447					
C 448					
C 449					
C 450	SOUND SYS. JCT. PANEL	MOLEX	4	562507	562503
C 451	WIRELESS MICRO-FIRST CPT BAG	MOLEX	2	562550	562549
C 452	UNDER DASH INSTR. PANEL	MOLEX	2	562550	562549
C 453	SOUND SYS. JCT.PANEL-VCP	PED WP	2	561566	561680
C 454	SOUND SYS.JCT.PAN.-FILT. VCP	PED WP	2	561566	561680
C 455	WIRELESS MICRO-LH HAT-RACK	CINCH	2	562554	562551
C 456	WORLD TRANSM.-RETARDER ACCUM.	PED MP	2	------	562427
C 457	WORLD TRANSM.-MAIN CONNECTOR	DEUTSCH	31	562572	562536
C 458	WORLD TRANSM.-TURBINE SP.SENS	PED MP	2	------	562426

NO	LOCATION	TYPE	CAVITY	#PIN HOUSING	#SOCKET HOUSING
C 459	WORLD TRANSM.-ENGINE SP.SENS.	PED MP	2	------	562426
C 460	WORLD TRANSM.-SPEED SENSOR	ITT	2	------	562541
C 461	WORLD TRANSM.-RETARDER TEMP.	PED MP	2	561566	561680
C 462	WORLD TRANSM.-RETARD SOL."K"	PED MP	2	------	562426
C 463	WORLD TRANSM.-SENSOR CONN.	DEUTSCH	16	562570	562571
C 464	RR JCT BOX-DDR CONNECTOR	DEUTSCH	6	------	562360
C 465	LH CONSOLE-SHIFTER SELECTOR	PED	20	------	562825
C 466	FR SERVICE CPT.-RESIS. MOD.	PED WP	3	------	562428
C 467	FR SERVICE CPT.-RESIS. MOD.	PED WP	3	------	562428
C 468			8		
C 469					
C 470	FR LH UPPER WHELL CPT-SILENT 1000	AMP MNL	2	561248	561247
C 471	FR LH UPPER WHELL CPT-SILENT 1000	AMP MNL	2	561248	561247
C 472	FR LH UPPER WHELL CPT-SILENT 1000	PED WP	2	561566	561690
C 473	FR LH UPPER WHELL CPT-SILENT 1000	AMP MNL	3	561667	561550
C 474	DRIVER CPT.-TEMP. SENSOR	AMP MNL	2	561247	561248
C 475	RR JCT BOX-SPEED SIGN CONNECTOR	AMP MNL	2	561248	561247
C 475M	RR JCT BOX-SPEED SIGN MANUAL TR.	MOLEX	6	562070	562069
C 475W	RR JCT BOX-SPEED SIGN WORLD TR.	MOLEX	6	562070	562069
C 476					
C 477					
C 478	ELECTRONIC DESTINATION SIGN	AMP CPC	9	561636	561637
C 479	HVAC MODULE				
C 480	UNDER DASH LH-DR. FAN SPEED CTR. MOD	PED	4	561889	561890
C 481	UNDER DASH LH-DR. FAN SPEED CTR. MOD	PED	3	561781	561782
C 482					
C 483	FR SERVICE CPT. (NOT USED)	PED PC	2	------	562237
C 484	UNDER DASH LH.-FOOT DAMPER MOTOR	PED PC	2	------	562076
C 485	UNDER DASH LH.-DASH & DEFR. DAM.MOT.	AMP MNL	3	561667	561550
C 486					
C 487					
C 488					
C 489					
C 490					
C 491					
C 492					
C 493					
C 494					
C 495					
C 496					
C 497					
C 498					
C 499					
C 500	FR LH UPPER WHELL CPT -PRODRIVER	MOLEX	6	562070	562069
C 501	FR LH UPPER WHELL CPT -PRODRIVER	PED MP	7	562433	------
C 502	LH DASH PANEL-PRE HEATER SW.	EATON	8	------	562763
C 503	LH CONSOLE-PRE HEATER SW.	EATON	2	------	561837
C 504	LH CONSOLE WEBASTO TIMER	AMP	8	------	562852
C 505	LH CONSOLE ESPAR TIMER	AMP	9	------	562681
C 506	FR JCT BOX CPT. DIGITAL CLOCK	AMP	4	561685	561687
C 507	FR SECT. LH HAT-RACK DIG. CLOCK	MOLEX	4	561477	561476
C 508	RR JCT BOX-FAN CLUTCH RETARDER	AMP MNL	6	561552	561515
C 509	FR LH UPPER WHELL CPT -DATA LOGGER	PED MP	16	------	562530
C 510	FR LH UPPER WHELL CPT -DATA LOGGER	DEUTSCH	9	562531	------
C 511	FR LH UPPER WHELL CPT -DATA LOGGER	PED MP	4	562532	------
C 512	FR LH UPPER WHELL CPT -DATA LOGGER	PED MP	10	562533	------
C 513	FR LH UPPER WHELL CPT -DATA LOGGER	AMP MNL	3	561667	561550
C 514	FR LH UPPER WHELL CPT -DATA LOGGER	PED MP	6	562433	562417
C 515	FR JCT BOX CPT.-INTERCOM	MOLEX	4	561477	561476
C 516	FR JCT BOX CPT.-INTERCOM	MOLEX	6	562070	562069
C 517	LAVATORY WALL-INTERCOM	MOLEX	6	562070	562069
C 519	UNDER DASH RH-SEDAN DOOR	HUMPHREY	2	------	562580
C 520	UNDER DASH RH-SEDAN DOOR	HUMPHREY	2	------	641385
C 521	UNDER DASH RH-SEDAN DOOR	HUMPHREY	2	------	641385
C 522	FR JCT BOX-DAYTIME LTS MODULE	BOSCH	5	------	561183
C 523	FR JCT BOX-FUSE BLOCK	PED	8	562647	562646
C 524	FR JCT BOX-FUSE BLOCK	PED	8	562647	562646

CONNECTORS CODE

NO	LOCATION	TYPE	CAVITY	#PIN HOUSING	#SOCKET HOUSING
C 525	FR JCT BOX-FUSE BLOCK	PED	8	562647	562646
C 526	FR JCT BOX-FUSE BLOCK	PED	8	562647	562646
C 527	FR JCT BOX-FUSE BLOCK	PED	8	562647	562646
C 528	FR JCT BOX-FUSE BLOCK	PED	8	562647	562646
C 529	FR JCT BOX-12V OUTLET	AMP MNL	2	561247	561248
C 530	RR JCT BOX-FUSE BLOCK	PED	8	562647	562646
C 531	RR JCT BOX-FUSE BLOCK	PED	8	562647	562646
C 532	RR JCT BOX-FUSE BLOCK	PED	8	562647	562646
C 533	RR JCT BOX-FUSE BLOCK	PED	8	562647	562646
C 534	RR JCT BOX-FUSE BLOCK	PED	8	562647	562646
C 535	RR JCT BOX-FIRE MODULE DETECT.	AMP MNL	3	561667	561550
C 536	UNDER DASH RH-DRIVER'S HTR TEMP. CTR	AMP MNL	6	561552	561515
C 537	BATT. CPT.-A/C PRESS. SIGN. RLY	AMP MNL	2	561248	561247
C 538	FR SERVICE CPT.-OUTSIDE TEMP. SENSOR	AMP MNL	2	561248	561247
C 539	HVAC DASH MODULE OUTPUT CON	MOLEX	24		562780
C 540	HVAC DASH MODULE INPUT CON	MOLEX	22		562781
C 541	SOUND SYS. JCT PANEL-AUDIO SEAT SYS.	PED WP	2	561566	561690
C 542	LH HAT RACK-AUDIO SEAT SYSTEM	AMP MNL	3	561667	561550
C 543	RR JCT BOX-PARK. BRAKE STOP LTS RESIS.	PED WP	2	561566	561690
C 544	SOUND SYS JCT PANEL-AUDIO SEAT SYS.	PED WP	3	561781	562428
C 545	LH HAT RACK-AUDIO SEAT SYSTEM	AMP MNL	3	561667	561550
C 546					
C 547	RH DASH PANEL-ACCESSORIES	AMP CPC	37	561645	561646
C 548	LH DASH PANEL-T.T. LT. TEST SW.	EATON	8	------	562763
C 549	LH DASH PANEL-FAN CLUTCH OVERR. SW	EATON	8	------	562763
C 550	LAST LUGG. CPT. -WCL RICON	AMP CPC	16	561694	561695
C 551	LAST LUGG. CPT. -WCL RICON	AMP CPC	16	561694	561695
C 552	LAST LUGG. CPT. -WCL RICON	AMP CPC	9	561636	561637
C 553	UNDER DASH R.H. - CONTROL. HEAD	MOLEX	16	---------	562559
C 554	UNDER DASH R.H. - CONTROL. HEAD	MOLEX	16	---------	562559
C 555	UNDER DASH R.H. - CONTROL. HEAD	MOLEX	16	---------	562559
C 556	UNDER DASH R.H. - RADIO ACC.	MOLEX	2	562550	562549
C 557	UNDER DASH R.H. - RADIO ACC.	MOLEX	9	562556	562555
C 558	UNDER DASH R.H. - RADIO ACC.	MOLEX	4	562507	562503
C 559	SOUND SYS. JCT. PANEL – FILTER AMPLI	PED WP	2	561566	561690
C 560	SOUND SYS. JCT. PANEL - POWER AMPLI	MOLEX	4	562507	562503
C 561	L.H. HAT RACK - WIRELESS MICRO	MOLEX	4	562507	562503
C 562	L.H. HAT RACK - VCP	MOLEX	9	562556	562555
C 563	L.H MODESTY PANEL - DRIVERS SPK.	MOLEX	4	562507	562503
C 564	L.H MODESTY PANEL - MICRO	MOLEX	4	562507	562503
C 565	R.H MODESTY PANEL - MICRO	MOLEX	4	562507	562503
C 566	L.H. CONSOLE - BOOM MICRO	MOLEX	4	562507	562503
C 567	L.H. CONSOLE - DRIVERS MICRO	MOLEX	4	562507	562503
C 568	SOUND SYS. JCT. PANEL - PASS. SPK	CINCH	4	562553	562552
C 569	SOUND SYS. JCT. PANEL - POWER AMPLI.	MOLEX	9	562556	562555
C 570	UNDER DASH PANEL TTLT	MOLEX	6		562464
C 571	UNDER DASH PANEL TTLT	MOLEX	20		562778
C 572	UNDER DASH PANEL TTLT	MOLEX	18		562779
C 573	UNDER DASH PANEL TTLT	MOLEX	8		562465
C 574	HAT -RACK FLUOR. INDIRECT LIGHTING	MOLEX	6	----------	562759
C 575	HAT -RACK FLUOR. INSTATION LIGHT	MOLEX	4	562507	562503
C 576	HAT -RACK FLUOR. INDIRECT LIGHTING	AMP MNL	3	561667	561550
C 577	HAT -RACK FLUOR. INDIRECT LIGHTING	AMP MNL	3	561667	561550
C 578	HAT -RACK FLUOR. INSTATION LIGHT	MOLEX	4	562507	562503
C 579					
C 580	RH DASH PANEL-HAT RACK FAN SW	EATON	8	--------	562763
C 581					
C 582	FRONT SERVICE CMPT. - WINDOWS AJAR	PED WP	2	561566	561690
C 583	L.H. DASH PANEL - MASTER KEY	DEUTSCH	2	562486	562485
C 584	FRONT SERVICE CMPT. - AIR HORH	HUMPHREY	3	--------	641385
C 585					
C 586					
C 587					
C 588	FRONT SERVICE CPT. CENTER SOUND SYS.	AMP. CPC	37	561645	561646
C 589	UNDER DASH - L.H. MIRROR	AMP MNL	9	561670	561669
C 590	UNDER DASH - R.H. MIRROR	AMP MNL	9	561670	561669
C 591	L.H.CONSOLE - MIRROR L.H.	EURAMTEC	8	--------	562799

NO	LOCATION	TYPE	CAVITY	#PIN HOUSING	#SOCKET HOUSING
C 592	L.H.CONSOLE - MIRROR R.H.	EURAMTEC	8	--------	562799
C 593	BATTERY CMPT. - CHARGER	PED WP	3	561781	561782
C 594	FRONT ROOF - DRIVERS LIGHT	LEEKRAFT		---------	562803
C 595	DASH CENTER MODULE - OPEN DOOR	MOLEX	4	561477	561476
C 596	DASH CENTER MODULE - CLOSE DOOR	MOLEX	4	561477	561476
C 597	L.H. DASH PANEL - DISPLAY SET SW.	MOLEX	5		562812
C 598	L.H. DASH PANEL - DISPLAY SET SW.	MOLEX	5		562812
C 599					
C 600	ENGINE CPT.-A/C LOW PRESS SW. UNLOAD	PED	2	562348	562471
C 601	L.H. ROOF - WINDOW AJAR	AMP MNL	2	561248	561247
C 602	L.H. ROOF - WINDOW AJAR	MOLEX	4	561477	561476
C 603	R.H. ROOF - WINDOW AJAR	AMP MNL	2	561248	561247
C 604					
C 605	HAT RACK - MOTOR FAN	PED	2	560997	561030
C 606	HAT RACK - MOTOR FAN	PED	2	560997	561030
C 607	FRONT SERVICE CMPT. RPM SIGNAL	PED WP	2	561566	561690
C 608	FRONT SERVICE CMPT. SPEED SIGNAL	PED WP	2	561566	561690
C 609	LAVATORY - NIGHT LIGHT				
C 610	RR JCT BOX	AMP MNL	6	561552	561515
C 611	HAT RACK READING LTS RICON	MOLEX	6	562558	562557
C 612	HAT -RACK FLUOR. INSTATION LTS RICON	MOLEX	4	562507	562503
C 613	HAT -RACK INDIRECT LTS RICON	AMP MNL	3	561667	561550
C 614	HAT -RACK INDIRECT LTS RICON	AMP MNL	3	561667	561550
C 615					
C 616					
L X	CLUSTER	JAE	22		562766
L Y	CLUSTER	JAE	30		562767
R X	CLUSTER	JAE	22		562764

DIODES NUMBER CODE

No.	PAGE	AMP	#PREV.	LOCATION	FUNCTION
D 1					
D 2					
D 3					
D 4	9.2	3A	561740	FR JCT BOX	WARNING HAZARD-RH
D 5	9.2	3A	561740	FR JCT BOX	WARNING HAZARD-LH
D 6	5	3A	561740	FR JCT BOX	WCL NEUT. SIGN INTERFACE TO PARK BRK TTLT
D 7					
D 8					
D 9	12	3A	561740	FR L.H. HAT-RACK	HOSTESS & PASSENGER CHIME
D 10					
D 11	17	3A	561740	RR JCT BOX	LAVATORY OCCUPIED SIGN
D 12	17	3A	561740	RR JCT BOX	LAVATORY OCCUPIED SIGN
D 13	17	3A	561740	FR DEST. SIGN	FR DESTINATION SIGN
D 14	17	3A	561740	FR DEST. SIGN	FR DESTINATION SIGN
D 15	18	3A	561740	FR JCT BOX	KNEELING SYSTEM CTR-UP
D 16	18	3A	561740	FR JCT BOX	KNEELING SYSTEM CTR-DOWN
D 17	9.2	3A	561740	FR JCT BOX	WARNING HAZARD-LH
D 18	9.2	3A	561740	FR JCT BOX	WARNING HAZARD-RH
D 19	9	3A	561740	FR JCT BOX	DAYTIME RUN LTS-PARK BRK CALL SW.
D 20	9	3A	561740	FR JCT BOX	DAYTIME RUN LTS-HEAD LT SW
D 21	18	3A	561740	FR JCT BOX	KNEELING SYSTEM FEED BACK
D 22					
D 23					
D 24					
D 25	11.1	3A	561740	FR JCT BOX	LUGGAGE DOOR AJAR T.T.LT.
D 26	11.1	3A	561740	FR JCT BOX	LUGGAGE DOOR AJAR T.T.LT.
D 27	11.1	3A	561740	FR JCT BOX	LUGGAGE DOOR AJAR T.T.LT.
D 28	11.1	3A	561740	FR JCT BOX	LUGGAGE DOOR AJAR T.T.LT.
D 29	11.1	3A	561740	FR JCT BOX	LUGGAGE DOOR AJAR T.T.LT.
D 30	11.1	3A	561740	FR JCT BOX	LUGGAGE DOOR AJAR T.T.LT.
D 31					
D 32					
D 33					
D 34					
D 35	25	3A	561740	RR JCT BOX	WCL DOOR AJAR ALARM T.T.LT.
D 36	11.4	3A	561740	RR JCT BOX	CHARGEUR 24V/110V
D 37	11.4	3A	561740	RR JCT BOX	CHARGEUR 24V/110V
D 38	11.4	3A	561740	RR JCT BOX	CHARGEUR 24V/110V
D 39					
D 40					
D 41					
D 42					
D 43	10	3A	561740	LOWER WIPER MOT.	WIPER MOTOR SUPRESSOR
D 44	10	3A	561740	LOWER WIPER MOT.	WIPER MOTOR SUPRESSOR
D 45	10	3A	561740	UPPER WIPER MOT.	WIPER MOTOR SUPRESSOR
D 46					
D 47					
D 48					
D 49					
D 50					
D 51					
D 52					
D 53					
D 54					
D 55					
D 56					
D 57					

No.	PAGE	AMP	#PREV.	LOCATION	FUNCTION
D 58	17	3A	561740	FR JCT BOX	RR HIGH BUOY - KNEELING
D 59	13.2	3A	561740	RJB A/C JCT PANEL	A/C & HEAT BYPASS SWITCH
D 60	13.2	3A	561740	RJB A/C JCT PANEL	A/C COMPR.CLUTCH SUPPRESSOR
D 61	9.2	3A	561740	FR JCT BOX	KNEELING SIDE FR RH DIRECTIONNAL LT
D 62	13.2	3A	561740	RJB A/C JCT PANEL	WATER PUMP FEED
D 63	17	3A	561740	FR JCT BOX	LAVATORY SONALERT
D 64	17	3A	561740	FR JCT BOX	WCL DOOR ALARM
D 65	13.2	3A	561740	RJB A/C JCT PANEL	WATER PUMP - PRE-HEAT FEED
D 66	13.2	3A	561740	RJB A/C JCT PANEL	WATER VALVE - HEAT SW. FEED
D 67	9.2	3A	561740	UNDER DASH	AUDIBLE FLASHER RLY - RH
D 68	9.2	3A	561740	UNDER DASH	AUDIBLE FLASHER RLY - LH
D 69					
D 70	18	3A	561740	FR JCT BOX	FR HIGH BUOY - KNEELING
D 71	18	3A	561740	FR JCT BOX	FR HIGH BUOY - KNEELING
D 72	18	3A	561740	FR JCT BOX	FR HIGH BUOY - KNEELING
D 73	18	3A	561740	FR JCT BOX	FR HIGH BUOY - KNEELING
D 74					
D 75	4	3A	381351	BAT CPT	STARTER-SUPPRESSOR COIL RLY
D 76					
D 77	18	3A	561740	FR JCT BOX	PARKING BRAKE - KNEELING
D 78	26	3A	561740	LH CONSOLE	PRE-HEAT WATER HEATER SW.
D 79	26	3A	561740	LH CONSOLE	PRE-HEAT WATER HEATER SW.
D 80					
D 81	18	3A	561740	FR JCT BOX	PIEZO-KNEELING
D 82	18	3A	561740	FR JCT BOX	PIEZO-KNEELING
D 83	8	3A	561740	RR JCT BOX	FAN CLUTCH W/RETARDER
D 84	13.2	3A	561740	RJB A/C JCT PANEL	WATER VALVE
D 85	13.2	3A	561740	RJB A/C JCT PANEL	WATER PUMP
D 86	16	3A	561740	UNDER DASH RH	ENTRANCE DOOR SEDAN
D 87	16	3A	561740	UNDER DASH RH	ENTRANCE DOOR SEDAN
D 88	16	3A	561740	UNDER DASH RH	ENTRANCE DOOR SEDAN
D 89	16	3A	561740	UNDER DASH RH	ENTRANCE DOOR SEDAN
D 90	16	3A	561740	UNDER DASH RH	ENTRANCE DOOR SEDAN
D 91	16	3A	561740	UNDER DASH RH	ENTRANCE DOOR SEDAN

DIODES NUMBER CODE

No.	PAGE	AMP	#PREV.	LOCATION	FUNCTION
D 1					
D 2					
D 3					
D 4	9.2	3A	561740	FR JCT BOX	WARNING HAZARD-RH
D 5	9.2	3A	561740	FR JCT BOX	WARNING HAZARD-LH
D 6	5	3A	561740	FR JCT BOX	WCL NEUT. SIGN INTERFACE TO PARK BRK TTLT
D 7					
D 8					
D 9					
D 10					
D 11	17	3A	561740	RR JCT BOX	LAVATORY OCCUPIED SIGN
D 12	17	3A	561740	RR JCT BOX	LAVATORY OCCUPIED SIGN
D 13	17	3A	561740	FR DEST. SIGN	FR DESTINATION SIGN
D 14	17	3A	561740	FR DEST. SIGN	FR DESTINATION SIGN
D 15	18	3A	561740	FR JCT BOX	KNEELING SYSTEM CTR-UP
D 16	18	3A	561740	FR JCT BOX	KNEELING SYSTEM CTR-DOWN
D 17	9.2	3A	561740	FR JCT BOX	WARNING HAZARD-LH
D 18	9.2	3A	561740	FR JCT BOX	WARNING HAZARD-RH
D 19	9	3A	561740	FR JCT BOX	DAYTIME RUN LTS-PARK BRK CALL SW.
D 20	9	3A	561740	FR JCT BOX	DAYTIME RUN LTS-HEAD LT SW
D 21	18	3A	561740	FR JCT BOX	KNEELING SYSTEM FEED BACK
D 22					
D 23					
D 24					
D 25	11.1	3A	561740	FR JCT BOX	LUGGAGE DOOR AJAR T.T.LT.
D 26	11.1	3A	561740	FR JCT BOX	LUGGAGE DOOR AJAR T.T.LT.
D 27	11.1	3A	561740	FR JCT BOX	LUGGAGE DOOR AJAR T.T.LT.
D 28	11.1	3A	561740	FR JCT BOX	LUGGAGE DOOR AJAR T.T.LT.
D 29	11.1	3A	561740	FR JCT BOX	LUGGAGE DOOR AJAR T.T.LT.
D 30	11.1	3A	561740	FR JCT BOX	LUGGAGE DOOR AJAR T.T.LT.
D 31					
D 32					
D 33					
D 34					
D 35	25	3A	561740	RR JCT BOX	WCL DOOR AJAR ALARM T.T.LT.
D 36	11.4	3A	561740	RR JCT BOX	CHARGEUR 24V/110V
D 37	11.4	3A	561740	RR JCT BOX	CHARGEUR 24V/110V
D 38	11.4	3A	561740	RR JCT BOX	CHARGEUR 24V/110V
D 39					
D 40					
D 41					
D 42					
D 43	10	3A	561740	LOWER WIPER MOT.	WIPER MOTOR SUPRESSOR
D 44	10	3A	561740	LOWER WIPER MOT.	WIPER MOTOR SUPRESSOR
D 45	10	3A	561740	UPPER WIPER MOT.	WIPER MOTOR SUPRESSOR
D 46					
D 47					
D 48					
D 49					
D 50					
D 51					
D 52					
D 53					
D 54					
D 55					
D 56					
D 57					
D 58	17	3A	561740	FR JCT BOX	RR HIGH BUOY - KNEELING
D 59	13.2	3A	561740	RJB A/C JCT PANEL	A/C & HEAT BYPASS SWITCH
D 60	13.2	3A	561740	RJB A/C JCT PANEL	A/C COMPR.CLUTCH SUPPRESSOR
D 61	9.2	3A	561740	FR JCT BOX	KNEELING SIDE FR RH DIRECTIONNAL LT
D 62	13.2	3A	561740	RJB A/C JCT PANEL	WATER PUMP FEED
D 63	17	3A	561740	FR JCT BOX	LAVATORY SONALERT
D 64	17	3A	561740	FR JCT BOX	WCL DOOR ALARM
D 65	13.2	3A	561740	RJB A/C JCT PANEL	WATER PUMP - PRE-HEAT FEED
D 66	13.2	3A	561740	RJB A/C JCT PANEL	WATER VALVE - HEAT SW. FEED
D 67	9.2	3A	561740	UNDER DASH	AUDIBLE FLASHER RLY - RH
D 68	9.2	3A	561740	UNDER DASH	AUDIBLE FLASHER RLY - LH
D 69					
D 70	18	3A	561740	FR JCT BOX	FR HIGH BUOY - KNEELING
D 71	18	3A	561740	FR JCT BOX	FR HIGH BUOY - KNEELING
D 72	18	3A	561740	FR JCT BOX	FR HIGH BUOY - KNEELING
D 73	18	3A	561740	FR JCT BOX	FR HIGH BUOY - KNEELING
D 74					
D 75	4	3A	381351	BAT CPT	STARTER-SUPPRESSOR COIL RLY
D 76					
D 77	18	3A	561740	FR JCT BOX	PARKING BRAKE - KNEELING
D 78	26	3A	561740	LH CONSOLE	PRE-HEAT WATER HEATER SW.
D 79	26	3A	561740	LH CONSOLE	PRE-HEAT WATER HEATER SW.
D 80					
D 81	18	3A	561740	FR JCT BOX	PIEZO-KNEELING
D 82	18	3A	561740	FR JCT BOX	PIEZO-KNEELING
D 83	8	3A	561740	RR JCT BOX	FAN CLUTCH W/RETARDER
D 84	13.2	3A	561740	RJB A/C JCT PANEL	WATER VALVE
D 85	13.2	3A	561740	RJB A/C JCT PANEL	WATER PUMP
D 86	16	3A	561740	UNDER DASH RH	ENTRANCE DOOR SEDAN
D 87	16	3A	561740	UNDER DASH RH	ENTRANCE DOOR SEDAN
D 88	16	3A	561740	UNDER DASH RH	ENTRANCE DOOR SEDAN
D 89	16	3A	561740	UNDER DASH RH	ENTRANCE DOOR SEDAN
D 90	16	3A	561740	UNDER DASH RH	ENTRANCE DOOR SEDAN
D 91	16	3A	561740	UNDER DASH RH	ENTRANCE DOOR SEDAN

DIODES NUMBER CODE

No.	PAGE	AMP	#PREV.	LOCATION	FUNCTION
D 1	13.1	3A	561740	RJB A/C JCT PANEL	LIQ. SOL. VALVE SUPPRESSOR
D 2	4.1	3A	561740	BATT. CPT.	EATON TRANSMISSION
D 3	1.1	3A	561740	BATT. CPT.	24V DISC. CUT OUT RLY
D 4	9.2	3A	561740	FR JCT BOX	WARNING HAZARD-RH
D 5	9.2	3A	561740	FR JCT BOX	WARNING HAZARD-LH
D 6	5	3A	561740	FR JCT BOX	WCL NEUT. SIGN INTERFACE TO PARK BRK TTLT
D 7					
D 8					
D 9	12	3A	561740	FR L.H. HAT-RACK	HOSTESS & PASSENGER CHIME
D 10					
D 11	17	3A	561740	RR JCT BOX	LAVATORY OCCUPIED SIGN
D 12	17	3A	561740	RR JCT BOX	LAVATORY OCCUPIED SIGN
D 13	17	3A	561740	FR DEST. SIGN	FR DESTINATION SIGN
D 14	17	3A	561740	FR DEST. SIGN	FR DESTINATION SIGN
D 15	18	3A	561740	FR JCT BOX	KNEELING SYSTEM CTR-UP
D 16	18	3A	561740	FR JCT BOX	KNEELING SYSTEM CTR-DOWN
D 17	9.2	3A	561740	FR JCT BOX	WARNING HAZARD-LH
D 18	9.2	3A	561740	FR JCT BOX	WARNING HAZARD-RH
D 19	9	3A	561740	FR JCT BOX	DAYTIME RUN LTS-PARK BRK CALL SW.
D 20	9	3A	561740	FR JCT BOX	DAYTIME RUN LTS-HEAD LT SW
D 21	18	3A	561740	FR JCT BOX	KNEELING SYSTEM FEED BACK
D 22					
D 23					
D 24					
D 25	11.1	3A	561740	FR JCT BOX	LUGGAGE DOOR AJAR T.T.LT.
D 26	11.1	3A	561740	FR JCT BOX	LUGGAGE DOOR AJAR T.T.LT.
D 27	11.1	3A	561740	FR JCT BOX	LUGGAGE DOOR AJAR T.T.LT.
D 28	11.1	3A	561740	FR JCT BOX	LUGGAGE DOOR AJAR T.T.LT.
D 29	11.1	3A	561740	FR JCT BOX	LUGGAGE DOOR AJAR T.T.LT.
D 30	11.1	3A	561740	FR JCT BOX	LUGGAGE DOOR AJAR T.T.LT.
D 31					
D 32					
D 33					
D 34					
D 35	25	3A	561740	RR JCT BOX	WCL DOOR AJAR ALARM T.T.LT.
D 36	11.4	3A	561740	RR JCT BOX	CHARGEUR 24V/110V
D 37	11.4	3A	561740	RR JCT BOX	CHARGEUR 24V/110V
D 38	11.4	3A	561740	RR JCT BOX	CHARGEUR 24V/110V
D 39					
D 40					
D 41					
D 42					
D 43	10	3A	561740	LOWER WIPER MOT.	WIPER MOTOR SUPRESSOR
D 44	10	3A	561740	LOWER WIPER MOT.	WIPER MOTOR SUPRESSOR
D 45	10	3A	561740	UPPER WIPER MOT.	WIPER MOTOR SUPRESSOR
D 46					
D 47					
D 48					
D 49					
D 50					
D 51					
D 52					
D 53					
D 54					
D 55					
D 56					
D 57					

No.	PAGE	AMP	#PREV.	LOCATION	FUNCTION
D 58	17	3A	561740	FR JCT BOX	RR HIGH BUOY - KNEELING
D 59	13.2	3A	561740	RJB A/C JCT PANEL	A/C & HEAT BYPASS SWITCH
D 60	13.2	3A	561740	RJB A/C JCT PANEL	A/C COMPR.CLUTCH SUPPRESSOR
D 61	9.2	3A	561740	FR JCT BOX	KNEELING SIDE FR RH DIRECTIONNAL LT
D 62	13.2	3A	561740	RJB A/C JCT PANEL	WATER PUMP FEED
D 63	17	3A	561740	FR JCT BOX	LAVATORY SONALERT
D 64	17	3A	561740	FR JCT BOX	WCL DOOR ALARM
D 65	13.2	3A	561740	RJB A/C JCT PANEL	WATER PUMP - PRE-HEAT FEED
D 66	13.2	3A	561740	RJB A/C JCT PANEL	WATER VALVE - HEAT SW. FEED
D 67	9.2	3A	561740	UNDER DASH	AUDIBLE FLASHER RLY - RH
D 68	9.2	3A	561740	UNDER DASH	AUDIBLE FLASHER RLY - LH
D 69					
D 70	18	3A	561740	FR JCT BOX	FR HIGH BUOY - KNEELING
D 71	18	3A	561740	FR JCT BOX	FR HIGH BUOY - KNEELING
D 72	18	3A	561740	FR JCT BOX	FR HIGH BUOY - KNEELING
D 73	18	3A	561740	FR JCT BOX	FR HIGH BUOY - KNEELING
D 74					
D 75	4	3A	381351	BAT CPT	STARTER-SUPPRESSOR COIL RLY
D 76					
D 77	18	3A	561740	FR JCT BOX	PARKING BRAKE - KNEELING
D 78	26	3A	561740	LH CONSOLE	PRE-HEAT WATER HEATER SW.
D 79	26	3A	561740	LH CONSOLE	PRE-HEAT WATER HEATER SW.
D 80					
D 81	18	3A	561740	FR JCT BOX	PIEZO-KNEELING
D 82	18	3A	561740	FR JCT BOX	PIEZO-KNEELING
D 83	8	3A	561740	RR JCT BOX	FAN CLUTCH W/RETARDER
D 84	13.2	3A	561740	RJB A/C JCT PANEL	WATER VALVE
D 85	13.2	3A	561740	RJB A/C JCT PANEL	WATER PUMP
D 86	16	3A	561740	UNDER DASH RH	ENTRANCE DOOR SEDAN
D 87	16	3A	561740	UNDER DASH RH	ENTRANCE DOOR SEDAN
D 88	16	3A	561740	UNDER DASH RH	ENTRANCE DOOR SEDAN
D 89	16	3A	561740	UNDER DASH RH	ENTRANCE DOOR SEDAN
D 90	16	3A	561740	UNDER DASH RH	ENTRANCE DOOR SEDAN
D 91	16	3A	561740	UNDER DASH RH	ENTRANCE DOOR SEDAN

DIODES NUMBER CODE

No.	PAGE	AMP	#PREV.	LOCATION	FUNCTION
D 1	13.1	3A	561740	RJB A/C JCT PANEL	LIQ. SOL. VALVE SUPPRESSOR
D 2	4.1	3A	561740	BATT. CPT.	EATON TRANSMISSION
D 3	1.1	3A	561740	BATT. CPT.	24V DISC. CUT OUT RLY
D 4	9.2	3A	561740	FR JCT BOX	WARNING HAZARD-RH
D 5	9.2	3A	561740	FR JCT BOX	WARNING HAZARD-LH
D 6	5	3A	561740	FR JCT BOX	WCL NEUT. SIGN INTERFACE TO PARK BRK TTLT
D 7					
D 8					
D 9	12	3A	561740	FR L.H. HAT-RACK	HOSTESS & PASSENGER CHIME
D 10	9.1	3A	561740	FR JCT BOX	DAY-TIME RUN LIGHT –ENGINE NOT RUN
D 11	17	3A	561740	RR JCT BOX	LAVATORY OCCUPIED SIGN
D 12	17	3A	561740	RR JCT BOX	LAVATORY OCCUPIED SIGN
D 13	17	3A	561740	FR DEST. SIGN	FR DESTINATION SIGN
D 14	17	3A	561740	FR DEST. SIGN	FR DESTINATION SIGN
D 15	18	3A	561740	FR JCT BOX	KNEELING SYSTEM CTR-UP
D 16	18	3A	561740	FR JCT BOX	KNEELING SYSTEM CTR-DOWN
D 17	9.2	3A	561740	FR JCT BOX	WARNING HAZARD-LH
D 18	9.2	3A	561740	FR JCT BOX	WARNING HAZARD-RH
D 19	9	3A	561740	FR JCT BOX	DAYTIME RUN LTS-PARK BRK CALL SW.
D 20	9	3A	561740	FR JCT BOX	DAYTIME RUN LTS-HEAD LT SW
D 21	18	3A	561740	FR JCT BOX	KNEELING SYSTEM FEED BACK
D 22					
D 23					
D 24					
D 25	11.1	3A	561740	FR JCT BOX	LUGGAGE DOOR AJAR T.T.LT.
D 26	11.1	3A	561740	FR JCT BOX	LUGGAGE DOOR AJAR T.T.LT.
D 27	11.1	3A	561740	FR JCT BOX	LUGGAGE DOOR AJAR T.T.LT.
D 28	11.1	3A	561740	FR JCT BOX	LUGGAGE DOOR AJAR T.T.LT.
D 29	11.1	3A	561740	FR JCT BOX	LUGGAGE DOOR AJAR T.T.LT.
D 30	11.1	3A	561740	FR JCT BOX	LUGGAGE DOOR AJAR T.T.LT.
D 31					
D 32					
D 33					
D 34					
D 35	25	3A	561740	RR JCT BOX	WCL DOOR AJAR ALARM T.T.LT.
D 36	11.4	3A	561740	RR JCT BOX	CHARGEUR 24V/110V
D 37	11.4	3A	561740	RR JCT BOX	CHARGEUR 24V/110V
D 38	11.4	3A	561740	RR JCT BOX	CHARGEUR 24V/110V
D 39					
D 40					
D 41					
D 42					
D 43	10	3A	561740	LOWER WIPER MOT.	WIPER MOTOR SUPRESSOR
D 44	10	3A	561740	LOWER WIPER MOT.	WIPER MOTOR SUPRESSOR
D 45	10	3A	561740	UPPER WIPER MOT.	WIPER MOTOR SUPRESSOR
D 46					
D 47					
D 48					
D 49					
D 50					
D 51					
D 52					
D 53					
D 54					
D 55					
D 56					
D 57					

No.	PAGE	AMP	#PREV.	LOCATION	FUNCTION
D 58	17	3A	561740	FR JCT BOX	RR HIGH BUOY - KNEELING
D 59	13.2	3A	561740	RJB A/C JCT PANEL	A/C & HEAT BYPASS SWITCH
D 60	13.2	3A	561740	RJB A/C JCT PANEL	A/C COMPR.CLUTCH SUPPRESSOR
D 61	9.2	3A	561740	FR JCT BOX	KNEELING SIDE FR RH DIRECTIONNAL LT
D 62	13.2	3A	561740	RJB A/C JCT PANEL	WATER PUMP FEED
D 63	17	3A	561740	FR JCT BOX	LAVATORY SONALERT
D 64	17	3A	561740	FR JCT BOX	WCL DOOR ALARM
D 65	13.2	3A	561740	RJB A/C JCT PANEL	WATER PUMP - PRE-HEAT FEED
D 66	13.2	3A	561740	RJB A/C JCT PANEL	WATER VALVE - HEAT SW. FEED
D 67	9.2	3A	561740	UNDER DASH	AUDIBLE FLASHER RLY - RH
D 68	9.2	3A	561740	UNDER DASH	AUDIBLE FLASHER RLY - LH
D 69					
D 70	18	3A	561740	FR JCT BOX	FR HIGH BUOY - KNEELING
D 71	18	3A	561740	FR JCT BOX	FR HIGH BUOY - KNEELING
D 72	18	3A	561740	FR JCT BOX	FR HIGH BUOY - KNEELING
D 73	18	3A	561740	FR JCT BOX	FR HIGH BUOY - KNEELING
D 74					
D 75	4	3A	381351	BAT CPT	STARTER-SUPPRESSOR COIL RLY
D 76					
D 77	18	3A	561740	FR JCT BOX	PARKING BRAKE - KNEELING
D 78	26	3A	561740	LH CONSOLE	PRE-HEAT WATER HEATER SW.
D 79	26	3A	561740	LH CONSOLE	PRE-HEAT WATER HEATER SW.
D 80					
D 81	18	3A	561740	FR JCT BOX	PIEZO-KNEELING
D 82	18	3A	561740	FR JCT BOX	PIEZO-KNEELING
D 83	8	3A	561740	RR JCT BOX	FAN CLUTCH W/RETARDER
D 84	13.2	3A	561740	RJB A/C JCT PANEL	WATER VALVE
D 85	13.2	3A	561740	RJB A/C JCT PANEL	WATER PUMP
D 86	16	3A	561740	UNDER DASH RH	ENTRANCE DOOR SEDAN
D 87	16	3A	561740	UNDER DASH RH	ENTRANCE DOOR SEDAN
D 88	16	3A	561740	UNDER DASH RH	ENTRANCE DOOR SEDAN
D 89	16	3A	561740	UNDER DASH RH	ENTRANCE DOOR SEDAN
D 90	16	3A	561740	UNDER DASH RH	ENTRANCE DOOR SEDAN
D 91	16	3A	561740	UNDER DASH RH	ENTRANCE DOOR SEDAN
D F1	8.1	3A	561740	RR. JCT. BOX	FAN CLUTCH - SUPPRESSOR
D F2	8.1	3A	561740	RR. JCT. BOX	FAN CLUTCH - SUPPRESSOR

RELAYS NUMBER CODE

No.	PAGE	COIL V	#PREV.	LOCATION	FUNCTION
R F1	8	24V	561707	RR JCT BOX	FAN CLUTCH W/RET. SPEED 1
R F2	8	24V	561707	RR JCT BOX	FAN CLUTCH W/RET. SPEED 2
R F3	8	24V	560772	RR JCT BOX	TIME DELAY
R LA	16	24V	561707	UNDER DASH RH.	ENTRANCE DOOR SEDAN (LATCH)
R LO	16	24V	561707	UNDER DASH RH.	ENTRANCE DOOR SEDAN (PRESS. SW.)
R LT	16	24V	561707	UNDER DASH RH.	ENTRANCE DOOR SEDAN (LIGHT)
R LV	16	24V	561707	UNDER DASH RH.	ENTRANCE DOOR SEDAN (VALVE)
R 1	1.1	24V	561991	FR JCT BOX	ENGINE RUN (24) FR
R 2	2	24V	561991	BATT. CPT.	ENGINE RUN (12) FR & RR
R 3	4	24V	561707	BATT. CPT.	FIELD RELAY
R 4	4	24V	561005	BATT. CPT.	STARTING MOTOR
R 5	5	24V	561707	FR JCT BOX	CRUISE CTR. STOP SIGN.
R 6	9.3	24V	561707	RR JCT BOX	STOP LTS-PARKING BRAKE
R 7	5	24V	561707	FR JCT BOX	FAST IDLE
R 8	6	24V	561707	RR JCT BOX	12V IGNITION WT
R 9	9.3	24V	561707	RR JCT BOX	BACK-UP LTS
R 10					
R 11	5	24V	561707	RR JCT BOX	12V IGNITION DDEC3
R 12	7	12V	562092	FR JCT BOX	ELECTRICAL HORNS
R 13	9.3	24V	561707	FR JCT BOX	FOG LTS
R 14	9.1	24V	561707	FR JCT BOX	BLINKER
R 15	9.1	24V	561707	FR JCT BOX	FR MARKER LTS
R 16	9.1	24V	561707	FR JCT BOX	IDENT. & CLEARANCE LTS
R 17	9.1	24V	561707	RR JCT BOX	TAIL,LICENCE,MARKER-RR LTS
R 18	9.1	24V	561707	FR JCT BOX	D R L-PARK BRK CUT-IN
R 19	9.1	24V	561707	FR JCT BOX	HEADLAMPS (HI)
R 20	9.1	24V	561707	FR JCT BOX	HEADLAMPS (LO)
R 21	9.2	24V	561707	FR JCT BOX	L.H. DIRECTIONNAL LT
R 22					
R 23	9.2	24V	561707	FR JCT BOX	R.H. DIRECTIONNAL LT
R 24	9.2	24V	561707	FR JCT BOX	R.H. CORNERING LT
R 25	9.2	24V	561707	FR JCT BOX	L.H. CORNERING LT
R 26	9.3	24V	561707	RR JCT BOX	STOP LTS
R 27	11.2	24V	561707	RR JCT BOX	AISLE & EMERG.EXIT - LTS
R 28	11.2	24V	561707	FR JCT BOX	DASH LTS RHEOSTAT
R 29	11.3	24V	561707	RR JCT BOX	READING LTS R.H.
R 30	11.3	24V	561707	RR JCT BOX	READING LTS L.H.
R 31	11.3	24V	561707	RR JCT BOX	GENERAL LTS
R 32	11.4	24V	561707	RR JCT BOX	24V FLUORESCENT
R 33	13.1	12V	562092	FR JCT BOX	BLOWER CUT-IN RLY
R 34	13.1	24V	561707	RJB A/C JCT PANEL	A/C LOGIC PANEL
R 35	13.1	24V	561707	RJB A/C JCT PANEL	WATER PUMP
R 36	13.1	24V	561707	RJB A/C JCT PANEL	A/C COMPRESSOR CLUTCH
R 37	10	24V	561707	FR JCT BOX	KNEELING LT
R 38					
R 39	13.2	24V	561005	BATT. CPT.	CONDENSER FAN MOTOR
R 40	13.2	24V	561014	BATT. CPT.	CONDENSER SPEED CTR HI
R 41	13.2	24V	561005	BATT. CPT.	CONDENSER SPEED CTR HI
R 42					
R 43	18	24V	561707	FR JCT BOX	KNEELING SYSTEM
R 44	18	24V	561707	FR JCT BOX	KNEELING SYSTEM
R 45					
R 46					
R 47	23	24V	561707	GALLEY COMPT	GALLEY-LIQUID CONTAINERS
R 48	23	24V	561707	GALLEY COMPT	COFFEE MAKER
R 49	21	24V	561707	FR JCT BOX	ABS - SERVICE BRK RLY
R 50	10	24V	561707	FR JCT BOX	UPPER WINDSHIELD WIPER
R 51	11.3	12V	562092	FR JCT BOX	DRIVER'S LTS RLY- ENT. DOOR SIGN.
R 52	21	24V	561707	FR JCT BOX	ABS - W/TR SIGN. RETARDER
R 53	1.1	24V	561991	RR JCT BOX	ENGINE RUN (24) RR
R 54	1.1	24V	561991	BATT. CPT.	12V CUT OUT RLY RR
R 55	1.1	24V	561991	BATT. CPT.	12V CUT OUT RLY FR
R 56					
R 57	9.1	24V	561707	FR JCT BOX	DAY'S BLINKER

No.	PAGE	COIL V	#PREV.	LOCATION	FUNCTION
R 58					
R 59	9.3	12V	562092	RR JCT BOX	DOCKING LTS
R 60					
R 61	9.3	24V	561707	RR JCT BOX	STOP LTS-JACOB & RET. SIGNAL
R 62					
R 63					
R 64					
R 65					
R 66	20.3	24V	561707	SS JCT PANEL	SOUND SYSTEM VIDEO
R 67	20.1	24V	561707	SS JCT PANEL	SOUND SYSTEM RADIO
R 68	20.1	24V	561991	SS JCT PANEL	SOUND SYSTEM AMPLIFIER
R 69					
R 70					
R 71					
R 72					
R 73					
R 74					
R 75					
R 76					
R 77					
R 78	1.1	12V	562092	FR JCT BOX	MASTER SWITCH
R 79	23	24V	561707	GALLEY CPT.	GALLEY-REFRIGERATOR
R 80	11.1	24V	561707	RR JCT BOX	ENGINE COMPARTMENT LTS
R 81					
R 82	19	24V	561707	FR JCT BOX	RETARDER WT
R 83					
R 84	8	24V	561707	RR JCT BOX	FAN CLUTCH-FIRST SPEED
R 85	8	24V	561707	RR JCT BOX	FAN CLUTCH-SECOND SPEED
R 86					
R 87	19	24V	561707	RR JCT BOX	ENGINE BRAKE REQUEST WT
R 88					
R 89	22	24V	561707	FR JCT BOX	HEATING WINDSHIELD
R 90	22	24V	561707	FR JCT BOX	HEATING WINDSHIELD
R 91	22	24V	561707	FR JCT BOX	HEATING WINDSHIELD
R 92	22	24V	561707	FR JCT BOX	HEATING WINDSHIELD
R 93	26	24V	561707	RR JCT BOX	PRE-HEAT WATER HEATER (WEBASTO)
R 94	25	24V	561707	RR JCT BOX	WCL - SYSTEM
R 95	25	24V	561707	RR JCT BOX	WCL - MAGNETIC SW. SIGN.
R 96	25	24V	561707	RR JCT BOX	WCL - DOOR AJAR ALARM
R 97	25	24V	561707	RR JCT BOX	WCL - DOOR AJAR PARK. BRAKE
R 98	25	12V	561538	RR JCT BOX	WCL -.
R 99	8	24V	561707	RR JCT BOX	RADIATOR FAN CLUTCH
R 100	4	12V	561538	RR JCT BOX	GENERATOR SIGNAL
R 101				RR JCT BOX	FUEL FILTER HEATER
R 102	17	24V	561707	RR JCT BOX	LAVATORY FLUORESCENT
R 103					
R 104	13.3	24V	561707	RR JCT BOX	HAT-RACK FAN - L.H.
R 105	13.3	24V	561707	RR JCT BOX	HAT-RACK FAN - R.H.
R 106	17.1	24V	561707	RR JCT BOX	LAVATORY FAN
R 107					
R 2010	26.2	24V	561230	WEBASTO PRE-HEAT	WEBASTO
V IMN	6	12V	562092	RR JCT BOX	VIM WORLD TR.-NEUTRAL SIGNAL
V IMR	6	12V	562092	RR JCT BOX	VIM WORLD TR.-B/U SIGNAL
V IM1	6	12V	562092	RR JCT BOX	VIM WORLD TR.-OUTPUT 1
V IM2	6	12V	562092	RR JCT BOX	VIM WORLD TR.-OUTPUT 2 ENG. BRK DISABLE
V IM3	6	12V	562092	RR JCT BOX	VIM WORLD TR.-OUTPUT 3 SPD SW. 5MPH NO NC
V IM4	6	12V	562092	RR JCT BOX	VIM WORLD TR.-OUTPUT 4 RETARD. ON SIGNAL

RELAYS NUMBER CODE

No.	PAGE	COIL V	#PREV.	LOCATION	FUNCTION	No.	PAGE	COIL V	#PREV.	LOCATION	FUNCTION

RELAYS NUMBER CODE

No.	PAGE	COIL V	#PREV.	LOCATION	FUNCTION
R F1	8.1	24V	561707	RR JCT BOX	FAN CLUTCH W/RET. SPEED 1
R F2	8.1	24V	561707	RR JCT BOX	FAN CLUTCH W/RET. SPEED 2
R F3	8.1	24V	560772	RR JCT BOX	TIME DELAY
R LA	16.1	24V	561707	UNDER DASH RH.	ENTRANCE DOOR SEDAN (LATCH)
R LO	16.1	24V	561707	UNDER DASH RH.	ENTRANCE DOOR SEDAN (PRESS. SW.)
R LT	16.1	24V	561707	UNDER DASH RH.	ENTRANCE DOOR SEDAN (LIGHT)
R LV	16.1	24V	561707	UNDER DASH RH.	ENTRANCE DOOR SEDAN (VALVE)
R 1	1.1	24V	561991	FR JCT BOX	ENGINE RUN (24) FR
R 2	2.1	24V	561991	BATT. CPT.	ENGINE RUN (12) FR & RR
R 3					
R 4	4.1	24V	561005	BATT. CPT.	STARTING MOTOR
R 5	5.1	24V	561707	FR JCT BOX	CRUISE CTR. STOP SIGN.
R 6	9.3	24V	561707	RR JCT BOX	STOP LTS-PARKING BRAKE
R 7	5.1	24V	561707	FR JCT BOX	FAST IDLE
R 8					
R 9	9.3	24V	561707	RR JCT BOX	BACK-UP LTS
R 10	4.1	12V	562092	BATT. CPT.	NEUTRAL SIGNAL EATON TRANSM.
R 11					
R 12	7.2	12V	562092	FR JCT BOX	ELECTRICAL HORNS
R 13	9.3	24V	561707	FR JCT BOX	FOG LTS
R 14	9.1	24V	561707	FR JCT BOX	BLINKER
R 15	9.1	24V	561707	FR JCT BOX	FR MARKER LTS
R 16	9.1	24V	561707	FR JCT BOX	IDENT. & CLEARANCE LTS
R 17	9.1	24V	561707	RR JCT BOX	TAIL,LICENCE,MARKER-RR LTS
R 18	9.1	24V	561707	FR JCT BOX	D R L-PARK BRK CUT-OUT
R 19	9.1	24V	561707	FR JCT BOX	HEADLAMPS (HI)
R 20	9.1	24V	561707	FR JCT BOX	HEADLAMPS (LO)
R 21	9.2	24V	561707	FR JCT BOX	L.H. DIRECTIONNAL LT
R 22	4.1	24V	561707	BATT. CPT	NEUTRAL SIGNAL EATON TRANSM.
R 23	9.2	24V	561707	FR JCT BOX	R.H. DIRECTIONNAL LT
R 24	9.2	24V	561707	FR JCT BOX	R.H. CORNERING LT
R 25	9.2	24V	561707	FR JCT BOX	L.H. CORNERING LT
R 26	9.3	24V	561707	RR JCT BOX	STOP LTS
R 27	11.2	24V	561707	RR JCT BOX	AISLE & EMERG.EXIT - LTS
R 28	11.2	24V	561707	FR JCT BOX	DASH LTS RHEOSTAT
R 29	11.3	24V	561707	RR JCT BOX	READING LTS R.H.
R 30	11.3	24V	561707	RR JCT BOX	READING LTS L.H.
R 31	11.3	24V	561707	RR JCT BOX	GENERAL LTS
R 32	11.4	24V	561707	RR JCT BOX	24V FLUORESCENT
R 33	4.1	12V	562092	FR JCT BOX	BLOWER CUT-IN RLY
R 34	13.1	24V	561707	RJB A/C JCT PANEL	A/C LOGIC PANEL
R 35	13.2	24V	561707	RJB A/C JCT PANEL	WATER PUMP
R 36	13.2	24V	561707	RJB A/C JCT PANEL	A/C COMPRESSOR CLUTCH
R 37	9.2	24V	561707	FR JCT BOX	KNEELING LT
R 38	13.1	24v	561707	RJB A/C JCT PANEL	A/C LIQ. SOL. VALVE
R 39	13.1	24V	561005	BATT. CPT.	CONDENSER FAN MOTOR
R 40	13.1	24V	561014	BATT. CPT.	CONDENSER SPEED CTR HI
R 41	13.1	24V	561005	BATT. CPT.	CONDENSER SPEED CTR HI
R 42	6.3	12V	562092	BATT. CPT	EATON TRANSM.
R 43	18.1	24V	561707	FR JCT BOX	KNEELING SYSTEM
R 44	18.1	24V	561707	FR JCT BOX	KNEELING SYSTEM
R 45					
R 46					
R 47	23.1	24V	561707	GALLEY COMPT	GALLEY-LIQUID CONTAINERS
R 48	23.1	24V	561707	GALLEY COMPT	GALLEY-COFFEE MAKER
R 49	21.1	24V	561707	FR JCT BOX	ABS - SERVICE BRK RLY
R 50					
R 51	11.3	24V	562092	FR JCT BOX	DRIVER'S LTS RLY- ENT. DOOR SIGN.
R 52	21.1	24V	561707	FR JCT BOX	ABS - W/TR SIGN. RETARDER
R 53	1.1	24V	561991	RR JCT BOX	ENGINE RUN (24) RR
R 54	1.1	24V	561991	BATT. CPT.	12V CUT OUT RLY RR
R 55	1.1	24V	561991	BATT. CPT.	12V CUT OUT RLY FR
R 56					
R 57	9.1	24V	561707	FR JCT BOX	DAY'S BLINKER

No.	PAGE	COIL V	#PREV.	LOCATION	FUNCTION
R 58					
R 59	9.3	12V	562092	RR JCT BOX	DOCKING LTS
R 60					
R 61	9.3	24V	561707	RR JCT BOX	STOP LTS-JACOB & RET. SIGNAL
R 62					
R 63					
R 64					
R 65					
R 66	20.3	24V	561707	SS JCT PANEL	SOUND SYSTEM VIDEO
R 67	20.1	12V	562092	SS JCT PANEL	SOUND SYSTEM RADIO
R 68	20.1	24V	561991	SS JCT PANEL	SOUND SYSTEM AMPLIFIER
R 69					
R 70					
R 71					
R 72					
R 73					
R 74					
R 75					
R 76					
R 77					
R 78	1.1	12V	562092	FR JCT BOX	MASTER SWITCH
R 79	23	24V	561707	GALLEY CPT.	GALLEY-REFRIGERATOR
R 80	11.1	24V	561707	RR JCT BOX	ENGINE COMPARTMENT LTS
R 81					
R 82	19	24V	561707	FR JCT BOX	RETARDER WT
R 83					
R 84	8	24V	561707	RR JCT BOX	FAN CLUTCH-FIRST SPEED
R 85	8	24V	561707	RR JCT BOX	FAN CLUTCH-SECOND SPEED
R 86					
R 87	19	24V	561707	RR JCT BOX	ENGINE BRAKE REQUEST WT
R 88					
R 89	22	24V	561707	FR JCT BOX	HEATING WINDSHIELD
R 90	22	24V	561707	FR JCT BOX	HEATING WINDSHIELD
R 91	22	24V	561707	FR JCT BOX	HEATING WINDSHIELD
R 92	22	24V	561707	FR JCT BOX	HEATING WINDSHIELD
R 93	26	24V	561707	RR JCT BOX	PRE-HEAT WATER HEATER (WEBASTO)
R 94	25	24V	561707	RR JCT BOX	WCL - SYSTEM
R 95	25	24V	561707	RR JCT BOX	WCL - MAGNETIC SW. SIGN.
R 96	25	24V	561707	RR JCT BOX	WCL - DOOR AJAR ALARM
R 97	25	24V	561707	RR JCT BOX	WCL - DOOR AJAR PARK. BRAKE
R 98	25	12V	561538	RR JCT BOX	WCL -.
R 99	8	24V	561707	RR JCT BOX	RADIATOR FAN CLUTCH
R 100	4	12V	561538	RR JCT BOX	GENERATOR SIGNAL
R 101				RR JCT BOX	FUEL FILTER HEATER
R 102	17	24V	561707	RR JCT BOX	LAVATORY FLUORESCENT
R 103					
R 104	13.3	24V	561707	RR JCT BOX	HAT-RACK FAN - L.H.
R 105	13.3	24V	561707	RR JCT BOX	HAT-RACK FAN - R.H.
R 106	17.1	24V	561707	RR JCT BOX	LAVATORY FAN
R 107					
R 2010	26.2	24V	561230	WEBASTO PRE-HEAT	WEBASTO
R PS	4.1SP1	24V	561707	FR JCT BOX	IDLE POWER SHUT DOWN
R TS	5.1SP1	24V	561707	FR JCT BOX	IDLE POWER SHUT DOWN
V IMN	6	12V	562092	RR JCT BOX	VIM WORLD TR.-NEUTRAL SIGNAL
V IMR	6	12V	562092	RR JCT BOX	VIM WORLD TR.-B/U SIGNAL
V IM1	6	12V	562092	RR JCT BOX	VIM WORLD TR.-OUTPUT 1
V IM2	6	12V	562092	RR JCT BOX	VIM WORLD TR.-OUTPUT 2 ENG. BRK DISABLE
V IM3	6	12V	562092	RR JCT BOX	VIM WORLD TR.-OUTPUT 3 SPD SW. 5MPH NO NC
V IM4	6.1	12V	562092	RR JCT BOX	VIM WORLD TR.-OUTPUT4 RETARD. ON SIGNAL

RELAYS NUMBER CODE

No.	PAGE	COIL V	#PREV.	LOCATION	FUNCTION	No.	PAGE	COIL V	#PREV.	LOCATION	FUNCTION

RELAYS NUMBER CODE

No.	PAGE	COIL V	#PREV.	LOCATION	FUNCTION
R F1	8.1	24V	561707	RR JCT BOX	FAN CLUTCH W/RET. SPEED 1
R F2	8.1	24V	561707	RR JCT BOX	FAN CLUTCH W/RET. SPEED 2
R F3	8.1	24V	560772	RR JCT BOX	TIME DELAY
R LA	16.1	24V	561707	UNDER DASH RH.	ENTRANCE DOOR SEDAN (LATCH)
R LO	16.1	24V	561707	UNDER DASH RH.	ENTRANCE DOOR SEDAN (PRESS. SW.)
R LT	16.1	24V	561707	UNDER DASH RH.	ENTRANCE DOOR SEDAN (LIGHT)
R LV	16.1	24V	561707	UNDER DASH RH.	ENTRANCE DOOR SEDAN (VALVE)
R 1	1.1	24V	561991	FR JCT BOX	ENGINE RUN (24) FR
R 2	2.1	24V	561991	BATT. CPT.	ENGINE RUN (12) FR & RR
R 3					
R 4	4.1	24V	561005	BATT. CPT.	STARTING MOTOR
R 5	5.1	24V	561707	FR JCT BOX	CRUISE CTR. STOP SIGN.
R 6	9.3	24V	561707	RR JCT BOX	STOP LTS-PARKING BRAKE
R 7	5.1	24V	561707	FR JCT BOX	FAST IDLE
R 8					
R 9	9.3	24V	561707	RR JCT BOX	BACK-UP LTS
R 10	4.1	12V	562092	BATT. CPT.	NEUTRAL SIGNAL EATON TRANSM.
R 11					
R 12	7.2	12V	562092	FR JCT BOX	ELECTRICAL HORNS
R 13	9.3	24V	561707	FR JCT BOX	FOG LTS
R 14	9.1	24V	561707	FR JCT BOX	BLINKER
R 15	9.1	24V	561707	FR JCT BOX	FR MARKER LTS
R 16	9.1	24V	561707	FR JCT BOX	IDENT. & CLEARANCE LTS
R 17	9.1	24V	561707	RR JCT BOX	TAIL,LICENCE,MARKER-RR LTS
R 18	9.1	24V	561707	FR JCT BOX	D R L-PARK BRK CUT-OUT
R 19	9.1	24V	561707	FR JCT BOX	HEADLAMPS (HI)
R 20	9.1	24V	561707	FR JCT BOX	HEADLAMPS (LO)
R 21	9.2	24V	561707	FR JCT BOX	L.H. DIRECTIONNAL LT
R 22	4.1	24V	561707	BATT. CPT	NEUTRAL SIGNAL EATON TRANSM.
R 23	9.2	24V	561707	FR JCT BOX	R.H. DIRECTIONNAL LT
R 24	9.2	24V	561707	FR JCT BOX	R.H. CORNERING LT
R 25	9.2	24V	561707	FR JCT BOX	L.H. CORNERING LT
R 26	9.3	24V	561707	RR JCT BOX	STOP LTS
R 27	11.2	24V	561707	RR JCT BOX	AISLE & EMERG.EXIT - LTS
R 28	11.2	24V	561707	FR JCT BOX	DASH LTS RHEOSTAT
R 29	11.3	24V	561707	RR JCT BOX	READING LTS R.H.
R 30	11.3	24V	561707	RR JCT BOX	READING LTS L.H.
R 31	11.3	24V	561707	RR JCT BOX	GENERAL LTS
R 32	11.4	24V	561707	RR JCT BOX	24V FLUORESCENT
R 33	4.1	12V	562092	FR JCT BOX	BLOWER CUT-IN RLY
R 34	13.1	24V	561707	RJB A/C JCT PANEL	A/C LOGIC PANEL
R 35	13.2	24V	561707	RJB A/C JCT PANEL	WATER PUMP
R 36	13.2	24V	561707	RJB A/C JCT PANEL	A/C COMPRESSOR CLUTCH
R 37	9.2	24V	561707	FR JCT BOX	KNEELING LT
R 38	13.1	24v	561707	RJB A/C JCT PANEL	A/C LIQ. SOL. VALVE
R 39	13.1	24V	561005	BATT. CPT.	CONDENSER FAN MOTOR
R 40	13.1	24V	561014	BATT. CPT.	CONDENSER SPEED CTR HI
R 41	13.1	24V	561005	BATT. CPT.	CONDENSER SPEED CTR HI
R 42	6.3	12V	562092	BATT. CPT	EATON TRANSM.
R 43	18.1	24V	561707	FR JCT BOX	KNEELING SYSTEM
R 44	18.1	24V	561707	FR JCT BOX	KNEELING SYSTEM
R 45					
R 46					
R 47	23.1	24V	561707	GALLEY COMPT	GALLEY-LIQUID CONTAINERS
R 48	23.1	24V	561707	GALLEY COMPT	GALLEY-COFFEE MAKER
R 49	21.1	24V	561707	FR JCT BOX	ABS - SERVICE BRK RLY
R 50					
R 51	11.3	24V	562092	FR JCT BOX	DRIVER'S LTS RLY- ENT. DOOR SIGN.
R 52	21.1	24V	561707	FR JCT BOX	ABS - W/TR SIGN. RETARDER
R 53	1.1	24V	561991	RR JCT BOX	ENGINE RUN (24) RR
R 54	1.1	24V	561991	BATT. CPT.	12V CUT OUT RLY RR
R 55	1.1	24V	561991	BATT. CPT.	12V CUT OUT RLY FR
R 56					
R 57	9.1	24V	561707	FR JCT BOX	DAY'S BLINKER

No.	PAGE	COIL V	#PREV.	LOCATION	FUNCTION
R 58					
R 59	9.3	12V	562092	RR JCT BOX	DOCKING LTS
R 60					
R 61	9.3	24V	561707	RR JCT BOX	STOP LTS-JACOB & RET. SIGNAL
R 62					
R 63					
R 64					
R 65					
R 66	20.3	24V	561707	SS JCT PANEL	SOUND SYSTEM VIDEO
R 67	20.1	12V	562092	SS JCT PANEL	SOUND SYSTEM RADIO
R 68	20.1	24V	561991	SS JCT PANEL	SOUND SYSTEM AMPLIFIER
R 69					
R 70					
R 71					
R 72					
R 73					
R 74					
R 75					
R 76					
R 77					
R 78	1.1	12V	562092	FR JCT BOX	MASTER SWITCH
R 79	23	24V	561707	GALLEY CPT.	GALLEY-REFRIGERATOR
R 80	11.1	24V	561707	RR JCT BOX	ENGINE COMPARTMENT LTS
R 81					
R 82	19	24V	561707	FR JCT BOX	RETARDER WT
R 83					
R 84	8	24V	561707	RR JCT BOX	FAN CLUTCH-FIRST SPEED
R 85	8	24V	561707	RR JCT BOX	FAN CLUTCH-SECOND SPEED
R 86					
R 87	19	24V	561707	RR JCT BOX	ENGINE BRAKE REQUEST WT
R 88					
R 89	22	24V	561707	FR JCT BOX	HEATING WINDSHIELD
R 90	22	24V	561707	FR JCT BOX	HEATING WINDSHIELD
R 91	22	24V	561707	FR JCT BOX	HEATING WINDSHIELD
R 92	22	24V	561707	FR JCT BOX	HEATING WINDSHIELD
R 93	26	24V	561707	RR JCT BOX	PRE-HEAT WATER HEATER (WEBASTO)
R 94	25	24V	561707	RR JCT BOX	WCL - SYSTEM
R 95	25	24V	561707	RR JCT BOX	WCL - MAGNETIC SW. SIGN.
R 96	25	24V	561707	RR JCT BOX	WCL - DOOR AJAR ALARM
R 97	25	24V	561707	RR JCT BOX	WCL - DOOR AJAR PARK. BRAKE
R 98	25	12V	561538	RR JCT BOX	WCL -.
R 99	8	24V	561707	RR JCT BOX	RADIATOR FAN CLUTCH
R 100	4	12V	561538	RR JCT BOX	GENERATOR SIGNAL
R 101				RR JCT BOX	FUEL FILTER HEATER
R 102	17	24V	561707	RR JCT BOX	LAVATORY FLUORESCENT
R 103	13.3	24V	561707	RR JCT BOX	HAT-RACK FAN
R 104	13.3	24V	561707	RR JCT BOX	HAT-RACK FAN - L.H.
R 105	13.3	24V	561707	RR JCT BOX	HAT-RACK FAN - R.H.
R 106	17.1	24V	561707	RR JCT BOX	LAVATORY FAN
R 107					
R 2010	26.2	24V	561230	WEBASTO PRE-HEAT	WEBASTO
R PS	4.1SP1	24V	561707	FR JCT BOX	IDLE POWER SHUT DOWN
R TS	5.1SP1	24V	561707	FR JCT BOX	IDLE POWER SHUT DOWN
V IMN	6	12V	562092	RR JCT BOX	VIM WORLD TR.-NEUTRAL SIGNAL
V IMR	6	12V	562092	RR JCT BOX	VIM WORLD TR.-B/U SIGNAL
V IM1	6	12V	562092	RR JCT BOX	VIM WORLD TR.-OUTPUT 1
V IM2	6	12V	562092	RR JCT BOX	VIM WORLD TR.-OUTPUT 2 ENG. BRK DISABLE
V IM3	6	12V	562092	RR JCT BOX	VIM WORLD TR.-OUTPUT 3 SPD SW. 5MPH NO NC
V IM4	6.1	12V	562092	RR JCT BOX	VIM WORLD TR.-OUTPUT4 RETARD. ON SIGNAL

RELAYS NUMBER CODE

No.	PAGE	COIL V	#PREV.	LOCATION	FUNCTION	No.	PAGE	COIL V	#PREV.	LOCATION	FUNCTION

RELAYS NUMBER CODE

No.	PAGE	COIL V	#PREV.	LOCATION	FUNCTION
R F1	8.1	24V	561707	RR JCT BOX	FAN CLUTCH W/RET. SPEED 1
R F2	8.1	24V	561707	RR JCT BOX	FAN CLUTCH W/RET. SPEED 2
R F3	8.1	24V	560772	RR JCT BOX	TIME DELAY
R LA	16.1	24V	561707	UNDER DASH RH.	ENTRANCE DOOR SEDAN (LATCH)
R LO	16.1	24V	561707	UNDER DASH RH.	ENTRANCE DOOR SEDAN (PRESS. SW.)
R LT	16.1	24V	561707	UNDER DASH RH.	ENTRANCE DOOR SEDAN (LIGHT)
R LV	16.1	24V	561707	UNDER DASH RH.	ENTRANCE DOOR SEDAN (VALVE)
R 1	1.1	24V	561991	FR JCT BOX	ENGINE RUN (24) FR
R 2	2.1	24V	561991	BATT. CPT.	ENGINE RUN (12) FR & RR
R 3					
R 4	4.1	24V	561005	BATT. CPT.	STARTING MOTOR
R 5	5.1	24V	561707	FR JCT BOX	CRUISE CTR. STOP SIGN.
R 6	9.3	24V	561707	RR JCT BOX	STOP LTS-PARKING BRAKE
R 7	5.1	24V	561707	FR JCT BOX	FAST IDLE
R 8					
R 9	9.3	24V	561707	RR JCT BOX	BACK-UP LTS
R 10	4.1	12V	562092	BATT. CPT.	NEUTRAL SIGNAL EATON TRANSM.
R 11					
R 12	7.2	12V	562092	FR JCT BOX	ELECTRICAL HORNS
R 13	9.3	24V	561707	FR JCT BOX	FOG LTS
R 14	9.1	24V	561707	FR JCT BOX	BLINKER
R 15	9.1	24V	561707	FR JCT BOX	FR MARKER LTS
R 16	9.1	24V	561707	FR JCT BOX	IDENT. & CLEARANCE LTS
R 17	9.1	24V	561707	RR JCT BOX	TAIL,LICENCE,MARKER-RR LTS
R 18	9.1	24V	561707	FR JCT BOX	D R L-PARK BRK CUT-OUT
R 19	9.1	24V	561707	FR JCT BOX	HEADLAMPS (HI)
R 20	9.1	24V	561707	FR JCT BOX	HEADLAMPS (LO)
R 21	9.2	24V	561707	FR JCT BOX	L.H. DIRECTIONNAL LT
R 22	4.1	24V	561707	BATT. CPT	NEUTRAL SIGNAL EATON TRANSM.
R 23	9.2	24V	561707	FR JCT BOX	R.H. DIRECTIONNAL LT
R 24	9.2	24V	561707	FR JCT BOX	R.H. CORNERING LT
R 25	9.2	24V	561707	FR JCT BOX	L.H. CORNERING LT
R 26	9.3	24V	561707	RR JCT BOX	STOP LTS
R 27	11.2	24V	561707	RR JCT BOX	AISLE & EMERG.EXIT - LTS
R 28	11.2	24V	561707	FR JCT BOX	DASH LTS RHEOSTAT
R 29	11.3	24V	561707	RR JCT BOX	READING LTS R.H.
R 30	11.3	24V	561707	RR JCT BOX	READING LTS L.H.
R 31	11.3	24V	561707	RR JCT BOX	GENERAL LTS
R 32	11.4	24V	561707	RR JCT BOX	24V FLUORESCENT
R 34	13.1	24V	561707	RJB A/C JCT PANEL	A/C LOGIC PANEL
R 35	13.2	24V	561707	RJB A/C JCT PANEL	WATER PUMP
R 36	13.2	24V	561707	RJB A/C JCT PANEL	A/C COMPRESSOR CLUTCH
R 37	9.2	24V	561707	FR JCT BOX	KNEELING LT
R 38	13.1	24v	561707	RJB A/C JCT PANEL	A/C LIQ. SOL. VALVE
R 39	13.1	24V	561005	BATT. CPT.	CONDENSER FAN MOTOR
R 40	13.1	24V	561014	BATT. CPT.	CONDENSER SPEED CTR HI
R 41	13.1	24V	561005	BATT. CPT.	CONDENSER SPEED CTR HI
R 42	6.3	12V	562092	BATT. CPT	EATON TRANSM.
R 43	18.1	24V	561707	FR JCT BOX	KNEELING SYSTEM
R 44	18.1	24V	561707	FR JCT BOX	KNEELING SYSTEM
R 45					
R 46					
R 47	23.1	24V	561707	GALLEY COMPT	GALLEY-LIQUID CONTAINERS
R 48	23.1	24V	561707	GALLEY COMPT	GALLEY-COFFEE MAKER
R 49	21.1	24V	561707	FR JCT BOX	ABS - SERVICE BRK RLY
R 50					
R 51	11.3	24V	562092	FR JCT BOX	DRIVER'S LTS RLY- ENT. DOOR SIGN.
R 52	21.1	24V	561707	FR JCT BOX	ABS - W/TR SIGN. RETARDER
R 53	1.1	24V	561991	RR JCT BOX	ENGINE RUN (24) RR
R 54	1.1	24V	561991	BATT. CPT.	12V CUT OUT RLY RR
R 55	1.1	24V	561991	BATT. CPT.	12V CUT OUT RLY FR
R 56					
R 57	9.1	24V	561707	FR JCT BOX	DAY'S BLINKER
R 58					

No.	PAGE	COIL V	#PREV.	LOCATION	FUNCTION
R 59	9.3	12V	562092	RR JCT BOX	DOCKING LTS
R 60					
R 61	9.3	24V	561707	RR JCT BOX	STOP LTS-JACOB & RET. SIGNAL
R 62					
R 63					
R 64					
R 65					
R 66	20.3	24V	561707	SS JCT PANEL	SOUND SYSTEM VIDEO
R 67	20.1	12V	562092	SS JCT PANEL	SOUND SYSTEM RADIO
R 68	20.1	24V	561991	SS JCT PANEL	SOUND SYSTEM AMPLIFIER
R 69					
R 70					
R 71					
R 72					
R 73					
R 74					
R 75					
R 76					
R 77					
R 78	1.1	12V	562092	FR JCT BOX	MASTER SWITCH
R 79	23	24V	561707	GALLEY CPT.	GALLEY-REFRIGERATOR
R 80	11.1	24V	561707	RR JCT BOX	ENGINE COMPARTMENT LTS
R 81					
R 82	19	24V	561707	FR JCT BOX	RETARDER WT
R 83					
R 84	8	24V	561707	RR JCT BOX	FAN CLUTCH-FIRST SPEED
R 85	8	24V	561707	RR JCT BOX	FAN CLUTCH-SECOND SPEED
R 86					
R 87	19	24V	561707	RR JCT BOX	ENGINE BRAKE REQUEST WT
R 88					
R 89	22	24V	561707	FR JCT BOX	HEATING WINDSHIELD
R 90	22	24V	561707	FR JCT BOX	HEATING WINDSHIELD
R 91	22	24V	561707	FR JCT BOX	HEATING WINDSHIELD
R 92	22	24V	561707	FR JCT BOX	HEATING WINDSHIELD
R 93	26	24V	561707	RR JCT BOX	PRE-HEAT WATER HEATER (WEBASTO)
R 94	25	24V	561707	RR JCT BOX	WCL - SYSTEM
R 95	25	24V	561707	RR JCT BOX	WCL - MAGNETIC SW. SIGN.
R 96	25	24V	561707	RR JCT BOX	WCL - DOOR AJAR ALARM
R 97	25	24V	561707	RR JCT BOX	WCL - DOOR AJAR PARK. BRAKE
R 98	25	24V	561707	RR JCT BOX	WCL -.ALTERNATOR SIGNAL
R 99	8	24V	561707	RR JCT BOX	RADIATOR FAN CLUTCH
R 100					
R 101				RR JCT BOX	FUEL FILTER HEATER
R 102	17	24V	561707	RR JCT BOX	LAVATORY FLUORESCENT
R 103	13.3	24V	561707	RR JCT BOX	HAT-RACK FAN
R 104	13.3	24V	561707	RR JCT BOX	HAT-RACK FAN - L.H.
R 105	13.3	24V	561707	RR JCT BOX	HAT-RACK FAN - R.H.
R 106	17.1	24V	561707	RR JCT BOX	LAVATORY FAN
R 107					
R 2010	26.2	24V	561230	WEBASTO PRE-HEAT	WEBASTO
R A1	4.2	24V	561707	RR JCT BOX	PRE-EXITATION RELAY BOSCH ALT.
R A2	4.2	24V	561707	RR JCT BOX	PRE-EXITATION RELAY BOSCH ALT.
R A3	4.2	24V	561707	RR JCT BOX	ALT. 1 OR ALT.2 RUN RELAY
R A4	4.2	24V	561707	RR JCT BOX	ALT. 1 AND ALT. 2 RUN RELAY
R PS	4.1SP1	24V	561707	FR JCT BOX	IDLE POWER SHUT DOWN
R TS	5.1SP1	24V	561707	FR JCT BOX	IDLE POWER SHUT DOWN
V IMN	6	12V	562092	RR JCT BOX	VIM WORLD TR.-NEUTRAL SIGNAL
V IMR	6	12V	562092	RR JCT BOX	VIM WORLD TR.-B/U SIGNAL
V IM1	6	12V	562092	RR JCT BOX	VIM WORLD TR.-OUTPUT 1
V IM2	6	12V	562092	RR JCT BOX	VIM WORLD TR.-OUTPUT 2 ENG. BRK DISABLE
V IM3	6	12V	562092	RR JCT BOX	VIM WORLD TR.-OUTPUT 3 SPD SW. 5MPH NO NC
V IM4	6.1	12V	562092	RR JCT BOX	VIM WORLD TR.-OUTPUT4 RETARD. ON SIGNAL

RELAYS NUMBER CODE

No.	PAGE	COIL V	#PREV.	LOCATION	FUNCTION	No.	PAGE	COIL V	#PREV.	LOCATION	FUNCTION

RESISTORS NUMBER CODE

No.	PAGE	OHM(S)	#PREV.	LOCATION	FUNCTION
RS 1	5	11 K	561898	FR JCT BOX	FAST IDLE DDEC CONTROL
RS 2	5	3.6 K	561897	FR JCT BOX	FAST IDLE DDEC CONTROL
RS 3	9.3	1 (2)	561537	FR JCT BOX	FOG LT - RH
RS 4	9.3	1 (2)	561537	FR JCT BOX	FOG LT - LH
RS 5	9.2	1 (2)	061976	FR JCT BOX	CORNERING LT - LH
RS 7	9.3	.82 (2)	060806	RR JCT BOX	PARKING BRAKE STOP LTS
RS 8	9.2	1 (2)	061976	FR JCT BOX	CORNERING LT - RH
RS 11	22	12	561191	FR TOP	DEFROSTER SPEED
RS 12	22	12	561191	FR TOP	DEFROSTER SPEED
RS 13	17	80 (2)	562108	FR TOP	FR DESTINATION SIGN
RS 9	9.3	1 (2)	061976	RR JCT BOX	DOCKING LT - RH
RS 10	9.3	1 (2)	061976	RR JCT BOX	DOCKING LT - LH
RS 17	7	220	562498	FR JCT BOX	FIRE ALARM
RS 18	8	75 K	064208	RR JCT BOX	FAN CLUTCH W/RETARDER
RS 20	15	1 K	562470	RR JCT BOX	WORLD TR. SPEED TO DDEC III

RESISTORS NUMBER CODE

No.	PAGE	OHM(S)	#PREV.	LOCATION	FUNCTION
RS 1	5	11 K	561898	FR JCT BOX	FAST IDLE DDEC CONTROL
RS 2	5	3.6 K	561897	FR JCT BOX	FAST IDLE DDEC CONTROL
RS 3	9.3	1 (2)	561537	FR JCT BOX	FOG LT - RH
RS 4	9.3	1 (2)	561537	FR JCT BOX	FOG LT - LH
RS 5	9.2	1 (2)	061976	FR JCT BOX	CORNERING LT - LH
RS 7	9.3	.82 (2)	060806	RR JCT BOX	PARKING BRAKE STOP LTS
RS 8	9.2	1 (2)	061976	FR JCT BOX	CORNERING LT - RH
RS 11	22	12	561191	FR TOP	DEFROSTER SPEED
RS 12	22	12	561191	FR TOP	DEFROSTER SPEED
RS 13	17	80 (2)	562108	FR TOP	FR DESTINATION SIGN
RS 9	9.3	1 (2)	061976	RR JCT BOX	DOCKING LT - RH
RS 10	9.3	1 (2)	061976	RR JCT BOX	DOCKING LT - LH
RS 17	7	220	562498	FR JCT BOX	FIRE ALARM
RS 18	8	75 K	064208	RR JCT BOX	FAN CLUTCH W/RETARDER
RS 20	15	1 K	562470	RR JCT BOX	WORLD TR. SPEED TO DDEC III
RS 21	22	1K	562470	DASH	DIVIDER VOLTAGE FOR LED
RS 24	9.1	1K	562470	DASH	DIVIDER VOLTAGE FOR LED
RS 25	9.3	1K	562470	DASH	DIVIDER VOLTAGE FOR LED
RS 26	10	1K	562470	DASH	DIVIDER VOLTAGE FOR LED
RS 28	26.1	1K	562470	DASH	DIVIDER VOLTAGE FOR LED

RESISTORS NUMBER CODE

No.	PAGE	OHM(S)	#PREV.	LOCATION	FUNCTION
RS 1	5	11 K	561898	FR JCT BOX	FAST IDLE DDEC CONTROL
RS 2	5	3.6 K	561897	FR JCT BOX	FAST IDLE DDEC CONTROL
RS 3	9.3	1 (2)	561537	FR JCT BOX	FOG LT - RH
RS 4	9.3	1 (2)	561537	FR JCT BOX	FOG LT - LH
RS 5	9.2	1 (2)	061976	FR JCT BOX	CORNERING LT - LH
RS 7	9.3	.82 (2)	060806	RR JCT BOX	PARKING BRAKE STOP LTS
RS 8	9.2	1 (2)	061976	FR JCT BOX	CORNERING LT - RH
RS 11	22	12	561191	FR TOP	DEFROSTER SPEED
RS 12	22	12	561191	FR TOP	DEFROSTER SPEED
RS 13	17	80 (2)	562108	FR TOP	FR DESTINATION SIGN
RS 9	9.3	1 (2)	061976	RR JCT BOX	DOCKING LT - RH
RS 10	9.3	1 (2)	061976	RR JCT BOX	DOCKING LT - LH
RS 17	7	220	562498	FR JCT BOX	FIRE ALARM
RS 18	8	75 K	064208	RR JCT BOX	FAN CLUTCH W/RETARDER
RS 20	15	1 K	562470	RR JCT BOX	WORLD TR. SPEED TO DDEC III
RS 21	22	1K	562470	DASH	DIVIDER VOLTAGE FOR LED
RS 24	9.1	1K	562470	DASH	DIVIDER VOLTAGE FOR LED
RS 25	9.3	1K	562470	DASH	DIVIDER VOLTAGE FOR LED
RS 26	10	1K	562470	DASH	DIVIDER VOLTAGE FOR LED
RS 28	26.1	1K	562470	DASH	DIVIDER VOLTAGE FOR LED
RS 29	23.1	1K	562470	GALLEY	DIVIDER VOLTAGE FOR LED
RS 30	23.1	1K	562470	GALLEY	DIVIDER VOLTAGE FOR LED
RS 31	23.1	1K	562470	GALLEY	DIVIDER VOLTAGE FOR LED

RESISTORS NUMBER CODE

No.	PAGE	OHM(S)	#PREV.	LOCATION	FUNCTION
RS 1	5	11 K	561898	FR JCT BOX	FAST IDLE DDEC CONTROL
RS 2	5	3.6 K	561897	FR JCT BOX	FAST IDLE DDEC CONTROL
RS 3	9.3	1 (2)	561537	FR JCT BOX	FOG LT - RH
RS 4	9.3	1 (2)	561537	FR JCT BOX	FOG LT - LH
RS 5	9.2	1 (2)	061976	FR JCT BOX	CORNERING LT - LH
RS 7	9.3	.82 (2)	060806	RR JCT BOX	PARKING BRAKE STOP LTS
RS 8	9.2	1 (2)	061976	FR JCT BOX	CORNERING LT - RH
RS 11	22	12	561191	FR TOP	DEFROSTER SPEED
RS 12	22	12	561191	FR TOP	DEFROSTER SPEED
RS 13	17	80 (2)	562108	FR TOP	FR DESTINATION SIGN
RS 9	9.3	1 (2)	061976	RR JCT BOX	DOCKING LT - RH
RS 10	9.3	1 (2)	061976	RR JCT BOX	DOCKING LT - LH
RS 17	7	220	562498	FR JCT BOX	FIRE ALARM
RS 18	8	75 K	064208	RR JCT BOX	FAN CLUTCH W/RETARDER
RS 20	15	1 K	562470	RR JCT BOX	WORLD TR. SPEED TO DDEC III
RS 21	22	15K	562908	DASH	CURRENT LIMIT FOR LED
RS 24	9.1	1.5K	562908	DASH	CURRENT LIMIT FOR LED
RS 25	9.3	1.5K	562908	DASH	CURRENT LIMIT FOR LED
RS 26	10	1.5K	562908	DASH	CURRENT LIMIT FOR LED
RS 28	26.1	1.5K	562908	DASH	CURRENT LIMIT FOR LED
RS 29	23.1	1.5K	562908	GALLEY	CURRENT LIMIT FOR LED
RS 30	23.1	1.5K	562908	GALLEY	CURRENT LIMIT FOR LED
RS 31	23.1	1.5K	562908	GALLEY	CURRENT LIMIT FOR LED
RS 32	13.3	1.5K	562908	DASH	CURRENT LIMIT FOR LED
RS 33	23.1	1.5K	562908	GALLEY	CURRENT LIMIT FOR LED
RS 34	23.1	1.5K	562908	GALLEY	CURRENT LIMIT FOR LED
RS 35	23.1	1.5K	562908	GALLEY	CURRENT LIMIT FOR LED

RESISTORS NUMBER CODE

No.	PAGE	OHM(S)	#PREV.	LOCATION	FUNCTION
RS 1	5	11 K	561898	FR JCT BOX	FAST IDLE DDEC CONTROL
RS 2	5	3.6 K	561897	FR JCT BOX	FAST IDLE DDEC CONTROL
RS 3	9.3	1 (2)	561537	FR JCT BOX	FOG LT - RH
RS 4	9.3	1 (2)	561537	FR JCT BOX	FOG LT - LH
RS 5	9.2	1 (2)	061976	FR JCT BOX	CORNERING LT - LH
RS 7	9.3	.82 (2)	060806	RR JCT BOX	PARKING BRAKE STOP LTS
RS 8	9.2	1 (2)	061976	FR JCT BOX	CORNERING LT - RH
RS 11	22	12	561191	FR TOP	DEFROSTER SPEED
RS 12	22	12	561191	FR TOP	DEFROSTER SPEED
RS 13	17	80 (2)	562108	FR TOP	FR DESTINATION SIGN
RS 9	9.3	1 (2)	061976	RR JCT BOX	DOCKING LT - RH
RS 10	9.3	1 (2)	061976	RR JCT BOX	DOCKING LT - LH
RS 17	7	220	562498	FR JCT BOX	FIRE ALARM
RS 18	8	75 K	064208	RR JCT BOX	FAN CLUTCH W/RETARDER
RS 20	15	1 K	562470	RR JCT BOX	WORLD TR. SPEED TO DDEC III
RS 21	22	15K	562908	DASH	CURRENT LIMIT FOR LED
RS 24	9.1	1.5K	562908	DASH	CURRENT LIMIT FOR LED
RS 25	9.3	1.5K	562908	DASH	CURRENT LIMIT FOR LED
RS 26	10	1.5K	562908	DASH	CURRENT LIMIT FOR LED
RS 28	26.1	1.5K	562908	DASH	CURRENT LIMIT FOR LED
RS 29	23.1	1.5K	562908	GALLEY	CURRENT LIMIT FOR LED
RS 30	23.1	1.5K	562908	GALLEY	CURRENT LIMIT FOR LED
RS 31	23.1	1.5K	562908	GALLEY	CURRENT LIMIT FOR LED
RS 32	13.3	1.5K	562908	DASH	CURRENT LIMIT FOR LED
RS 33	23.1	1.5K	562908	GALLEY	CURRENT LIMIT FOR LED
RS 34	23.1	1.5K	562908	GALLEY	CURRENT LIMIT FOR LED
RS 35	23.1	1.5K	562908	GALLEY	CURRENT LIMIT FOR LED
RS 36	13.1	10	064907	BATT. COMPT.	CURRENT LIMIT FOR RELAY
RS 37	13.1	5	064907	BATT. COMPT.	CURRENT LIMIT FOR RELAY

RESISTORS NUMBER CODE

No.	PAGE	OHM(S)	#PREV.	LOCATION	FUNCTION
RS 1	5	11 K	561898	FR JCT BOX	FAST IDLE DDEC CONTROL
RS 2	5	3.6 K	561897	FR JCT BOX	FAST IDLE DDEC CONTROL
RS 3	9.3	1 (2)	561537	FR JCT BOX	FOG LT - RH
RS 4	9.3	1 (2)	561537	FR JCT BOX	FOG LT - LH
RS 5	9.2	1 (2)	061976	FR JCT BOX	CORNERING LT - LH
RS 7	9.3	.82 (2)	060806	RR JCT BOX	PARKING BRAKE STOP LTS
RS 8	9.2	1 (2)	061976	FR JCT BOX	CORNERING LT - RH
RS 11	22	12	561191	FR TOP	DEFROSTER SPEED
RS 12	22	12	561191	FR TOP	DEFROSTER SPEED
RS 13	17	80 (2)	562108	FR TOP	FR DESTINATION SIGN
RS 9	9.3	1 (2)	061976	RR JCT BOX	DOCKING LT - RH
RS 10	9.3	1 (2)	061976	RR JCT BOX	DOCKING LT - LH
RS 17	7	220	562498	FR JCT BOX	FIRE ALARM
RS 18	8	75 K	064208	RR JCT BOX	FAN CLUTCH W/RETARDER
RS 20	15	1 K	562470	RR JCT BOX	WORLD TR. SPEED TO DDEC III
RS 21	22	15K	562908	DASH	CURRENT LIMIT FOR LED
RS 24	9.1	1.5K	562908	DASH	CURRENT LIMIT FOR LED
RS 25	9.3	1.5K	562908	DASH	CURRENT LIMIT FOR LED
RS 26	10	1.5K	562908	DASH	CURRENT LIMIT FOR LED
RS 28	26.1	1.5K	562908	DASH	CURRENT LIMIT FOR LED
RS 29	23.1	1.5K	562908	GALLEY	CURRENT LIMIT FOR LED
RS 30	23.1	1.5K	562908	GALLEY	CURRENT LIMIT FOR LED
RS 31	23.1	1.5K	562908	GALLEY	CURRENT LIMIT FOR LED
RS 32	13.3	1.5K	562908	DASH	CURRENT LIMIT FOR LED
RS 33	4.2	30	562948	RR JCT BOX	CURRENT LOAD FOR RELAY CONTACT
RS 33	23.1	1.5K	562908	GALLEY	CURRENT LIMIT FOR LED
RS 34	23.1	1.5K	562908	GALLEY	CURRENT LIMIT FOR LED
RS 35	23.1	1.5K	562908	GALLEY	CURRENT LIMIT FOR LED
RS 36	13.1	10	064907	BATT. COMPT.	CURRENT LIMIT FOR RELAY
RS 37	13.1	5	064907	BATT. COMPT.	CURRENT LIMIT FOR RELAY

RESISTORS NUMBER CODE

No.	PAGE	OHM(S)	#PREV.	LOCATION	FUNCTION
RS 1	5	11 K	561898	FR JCT BOX	FAST IDLE DDEC CONTROL
RS 2	5	3.6 K	561897	FR JCT BOX	FAST IDLE DDEC CONTROL
RS 3	9.3	1 (2)	561537	FR JCT BOX	FOG LT - RH
RS 4	9.3	1 (2)	561537	FR JCT BOX	FOG LT - LH
RS 5	9.2	1 (2)	061976	FR JCT BOX	CORNERING LT - LH
RS 6	16.1	5	563006	RH UNDER DASH	VOLTAGE DIV. OPEN DOOR SOL.
RS 7	9.3	.82 (2)	060806	RR JCT BOX	PARKING BRAKE STOP LTS
RS 8	9.2	1 (2)	061976	FR JCT BOX	CORNERING LT - RH
RS 11	22	12	561191	FR TOP	DEFROSTER SPEED
RS 12	22	12	561191	FR TOP	DEFROSTER SPEED
RS 13	17	80 (2)	562108	FR TOP	FR DESTINATION SIGN
RS 9	9.3	1 (2)	061976	RR JCT BOX	DOCKING LT - RH
RS 10	9.3	1 (2)	061976	RR JCT BOX	DOCKING LT - LH
RS 17	7	220	562498	FR JCT BOX	FIRE ALARM
RS 18	8	75 K	064208	RR JCT BOX	FAN CLUTCH W/RETARDER
RS 20	15	1 K	562470	RR JCT BOX	WORLD TR. SPEED TO DDEC III
RS 21	22	15K	562908	DASH	CURRENT LIMIT FOR LED
RS 24	9.1	1.5K	562908	DASH	CURRENT LIMIT FOR LED
RS 25	9.3	1.5K	562908	DASH	CURRENT LIMIT FOR LED
RS 26	10	1.5K	562908	DASH	CURRENT LIMIT FOR LED
RS 28	26.1	1.5K	562908	DASH	CURRENT LIMIT FOR LED
RS 29	23.1	1.5K	562908	GALLEY	CURRENT LIMIT FOR LED
RS 30	23.1	1.5K	562908	GALLEY	CURRENT LIMIT FOR LED
RS 31	23.1	1.5K	562908	GALLEY	CURRENT LIMIT FOR LED
RS 32	13.3	1.5K	562908	DASH	CURRENT LIMIT FOR LED
RS 33	4.2	30	562948	RR JCT BOX	CURRENT LOAD FOR RELAY CONTACT
RS 33	23.1	1.5K	562908	GALLEY	CURRENT LIMIT FOR LED
RS 34	23.1	1.5K	562908	GALLEY	CURRENT LIMIT FOR LED
RS 35	23.1	1.5K	562908	GALLEY	CURRENT LIMIT FOR LED
RS 36	13.1	10	064907	BATT. COMPT.	CURRENT LIMIT FOR RELAY
RS 37	13.1	5	064907	BATT. COMPT.	CURRENT LIMIT FOR RELAY

WIRING DIAGRAM KEYS

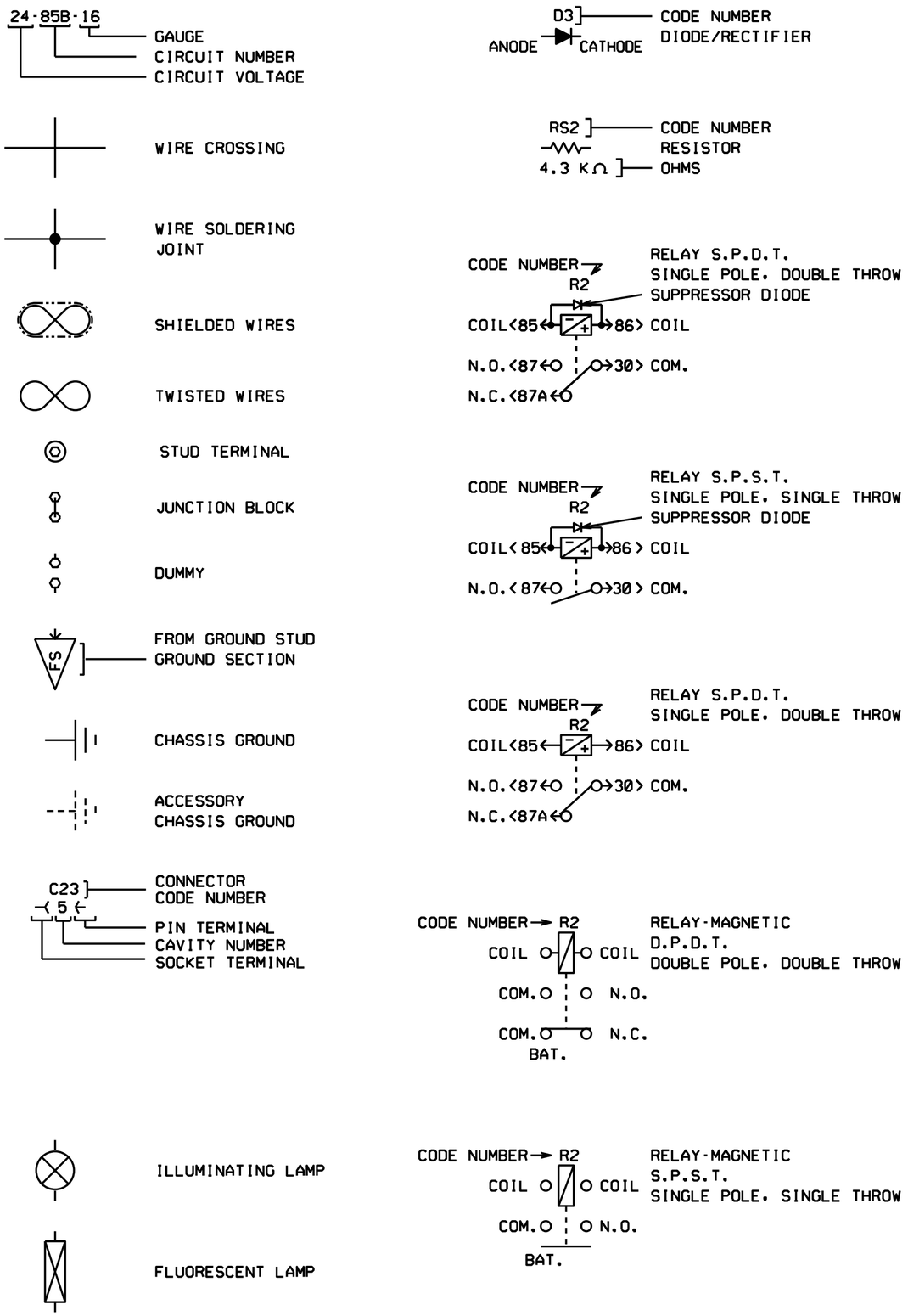

BLK	BLACK
YEL	YELLOW
RED	RED
WH	WHITE
GRY	GREY
ORA	ORANGE
BLU	BLUE
GRN	GREEN
BRN	BROWN
PUR	PURPLE
PK	PINK

WIRING DIAGRAM KEYS

24-85B-16
- GAUGE
- CIRCUIT NUMBER
- CIRCUIT VOLTAGE

WIRE CROSSING

WIRE SOLDERING JOINT

SHIELDED WIRES

TWISTED WIRES

STUD TERMINAL

JUNCTION BLOCK

DUMMY

FS — FROM GROUND STUD GROUND SECTION

CHASSIS GROUND

ACCESSORY CHASSIS GROUND

C23 — CONNECTOR CODE NUMBER
5
- PIN TERMINAL
- CAVITY NUMBER
- SOCKET TERMINAL

ILLUMINATING LAMP

FLUORESCENT LAMP

D3 — CODE NUMBER
ANODE — CATHODE — DIODE/RECTIFIER

RS2 — CODE NUMBER
4.3 KΩ — RESISTOR OHMS

CODE NUMBER — R2
COIL <85 — 86> COIL
N.O. <87 — 30> COM.
N.C. <87A
RELAY S.P.D.T.
SINGLE POLE, DOUBLE THROW
SUPPRESSOR DIODE

CODE NUMBER — R2
COIL <85 — 86> COIL
N.O. <87 — 30> COM.
RELAY S.P.S.T.
SINGLE POLE, SINGLE THROW
SUPPRESSOR DIODE

CODE NUMBER — R2
COIL <85 — 86> COIL
N.O. <87 — 30> COM.
N.C. <87A
RELAY S.P.D.T.
SINGLE POLE, DOUBLE THROW

CODE NUMBER → R2
COIL — COIL
COM. — N.O.
COM. — N.C.
BAT.
RELAY-MAGNETIC
D.P.D.T.
DOUBLE POLE, DOUBLE THROW

CODE NUMBER → R2
COIL — COIL
COM. — N.O.
BAT.
RELAY-MAGNETIC
S.P.S.T.
SINGLE POLE, SINGLE THROW

7.5 — AMPACITY FUSE

CB23 — CIRCUIT BREAKER CODE NUMBER
10A — AMPACITY

N.O. N.C. COM. — SWITCH S.P.D.T.
SINGLE POLE, DOUBLE THROW

PRESSURE SWITCH N.C.

PRESSURE SWITCH N.O.

SWITCH MOMENTARY CONTACT

SWITCH PUSH BUTTON

SWITCH MECHANICAL LOCK
LOCK

M — ELECTRIC MOTOR

110V EXTERIOR PLUG RECEPTACLE

ELECTRIC HORN

THERMOSTAT

HEATER

SOLENOID VALVE

T — THERMISTOR

BATTERY

FR. JCT BOX - JUNCTION BLOCK

RR. JCT BOX - JUNCTION BLOCK

BAT. JCT PANEL - JUNCTION BLOCK

BLK	BLACK
YEL	YELLOW
RED	RED
WH	WHITE
GRY	GREY
ORA	ORANGE
BLU	BLUE
GRN	GREEN
BRN	BROWN
PUR	PURPLE
PK	PINK

FUSES CODE

No.	PAGE	AMP.	#PREV.	LOCATION	FUNCTION
F 1	6	10A	562407	RR. JCT. BOX	WORLD TRANSMISSION 12V BATTERY
F 2	6	10A	562407	RR. JCT. BOX	WORLD TRANSMISSION 12V IGNITION
F 3	7	20A	562605	FR. JCT. BOX	ELECTRICAL HORNS
F 4	7	5A	562259	FR. JCT. BOX	FIRE ALARM
F 5	8	10A	562407	RR. JCT. BOX	AIR DRYER
F 6	8	5A	562602	FR. JCT. BOX	ETHER COLD START & CRUISE DECEL SW.
F 7	8	5A	562602	FR. JCT. BOX	PARKING BRAKE PRESSURE SW.
F 8	9.2	10A	562407	FR. JCT. BOX	CORNERING LTS
F 9	9.3	15A	562604	RR. JCT. BOX	DOCKING LTS
F 10	9.3	15A	562604	FR. JCT. BOX	FOG LTS
F 11	11.1	5A	562259	FR. JCT. BOX	FRONT SERVICE CPT LTS
F 12	11.2	10A	562407	RR. JCT. BOX	AISLE LTS
F 13	11.2	7.5A	562602	RR. JCT. BOX	EMERGENCY EXIT LTS
F 14	11.3	7.5A	562602	FR. JCT. BOX	DRIVER'S LTS
F 15	11.3	15A	562604	RR. JCT. BOX	READING LTS RH
F 16	11.3	15A	562604	RR. JCT. BOX	READING LTS LH
F 17	11.3	10A	562407	RR. JCT. BOX	INDIRECT LIGHTING R.H.
F 18	11.4	10A	562407	RR. JCT. BOX	24V FLUORESCENT RH
F 19	11.4	10A	562407	RR. JCT. BOX	24V FLUORESCENT LH
F 20	11.3	3A	562599	FR. JCT. BOX	GENERAL & READING LTS. SW.
F 21	12	10A	560061	RR. JCT. BOX	PRIME PUMP
F 22	14	10A	562407	FR. JCT. BOX	POWER 12V OUTLET
F 23	14	15A	562604	FR. JCT. BOX	DRIVER'S WINDOW LIFTER
F 24	14	15A	562604	FR. JCT. BOX	CIGAR LIGHTER
F 25	14	3A	562599	FR. JCT. BOX	SUN VISOR
F 26	15	5A	562259	FR. JCT. BOX	WATER HTR TIMER
F 27	23	5A	562259	RR. JCT. BOX	GALLEY LAMP & LAVATORY NIGHT LTS.
F 28	17	10A	562407	RR. JCT. BOX	LAVATORY PUMP
F 29	17	7.5A	562602	RR. JCT. BOX	LAVATORY LTS
F 31	17	5A	562259	FR. JCT. BOX	FRONT DESTINATION SIGN ELECTRONIC
F 31	17	7.5A	562602	FR. JCT. BOX	FRONT DESTINATION SIGN ELECTRIC
F 32	11.3	5A	562259	FR. JCT. BOX	PASSENGER NO SMOKING LTS
F 33	18	5A	562259	FR. JCT. BOX	KNEELING SYSTEM
F 34	19	3A	562599	FR. JCT. BOX	LUGGAGE DOOR LOCK
F 39	22	10A	562407	FR. JCT. BOX	UPPER WINDSHIELD FAN DEFROST
F 40	22	20A	562605	FR. JCT. BOX	HEATED WINDSCHIELD LH
F 41	22	20A	562605	FR. JCT. BOX	HEATED WINDSCHIELD RH
F 46	24	7.5A	562602	FR. JCT. BOX	MIRROR ADJUST & HEATED 24V SPARTAN
F 47	24	7.5A	562407	FR. JCT. BOX	MIRROR ADJUST & HEATED 12V RAMCO
F 48	25	10A	562407	RR. JCT. BOX	WHEEL CHAIR LIFT POWER CONTROL
F 49	26	20A	562605	RR. JCT. BOX	PRE-HEAT WATER HEATER WEBASTO
F 50	26	20A	562605	RR. JCT. BOX	PRE-HEAT WATER HEATER
F 51	11.2	7.5A	562602	RR. JCT. BOX	HAR RACK CPT LTS
F 57	17	5A	562259	RR. JCT. BOX	LAVATORY FLUORESCENT
F 58	11.3	10A	562407	RR. JCT. BOX	INDIRECT LIGHTING L.H.
F 59	17.1	3A	562599	RR. JCT. BOX	GENERATOR RUN RLY.
F 60	17.1	10A	562407	RR. JCT. BOX	LAVATORY FAN
F 61	27	1A	560893	FR. JCT. BOX	INTERCOM
F 70	23	7.5A	562602	GALLEY PANEL	GALLEY RH CONTAINER
F 71	23	7.5A	562602	GALLEY PANEL	GALLEY LH CONTAINER
F 72	23	10A	562407	GALLEY PANEL	GALLEY REFRIGERATOR COMPRESSOR
F 73	23	35A	562608	GALLEY PANEL	GALLEY COFFEMAKER
F 74	23	7.5	560598	BAT. CPT.	GALLEY REFRIGERATOR

FUSES CODE

No.	PAGE	AMP.	#PREV.	LOCATION	FUNCTION
F 1	6.1	10A	562407	RR. JCT. BOX	WORLD TRANSMISSION 12V BATTERY
F 2	6.1	10A	562407	RR. JCT. BOX	WORLD TRANS.& EATON TRANS.12V IGNITION
F 3	7.2	20A	562605	FR. JCT. BOX	ELECTRICAL HORNS
F 4	7.2	5A	562259	FR. JCT. BOX	FIRE ALARM
F 5	8.1	10A	562407	RR. JCT. BOX	AIR DRYER
F 6	5.1	5A	562602	FR. JCT. BOX	CRUISE DECEL SW.
F 7	8.1	5A	562602	FR. JCT. BOX	PARKING BRAKE PRESSURE SW.
F 8	9.2	10A	562407	FR. JCT. BOX	CORNERING LTS
F 9	9.3	15A	562604	RR. JCT. BOX	DOCKING LTS
F 10	9.3	15A	562604	FR. JCT. BOX	FOG LTS
F 11	11.1	5A	562259	FR. JCT. BOX	FRONT SERVICE CPT LTS
F 12	11.2	10A	562407	RR. JCT. BOX	AISLE LTS
F 13	11.2	7.5A	562602	RR. JCT. BOX	EMERGENCY EXIT LTS
F 14	11.3	15A	562602	FR. JCT. BOX	DRIVER'S LTS
F 15	11.3	15A	562604	RR. JCT. BOX	READING LTS RH
F 16	11.3	15A	562604	RR. JCT. BOX	READING LTS LH
F 17	11.3	10A	562407	RR. JCT. BOX	INDIRECT LIGHTING R.H.
F 18	11.4	10A	562407	RR. JCT. BOX	24V FLUORESCENT RH
F 19	11.4	10A	562407	RR. JCT. BOX	24V FLUORESCENT LH
F 20	11.3	5A	562599	FR. JCT. BOX	GENERAL & READING LTS. SW.
F 21	12.1	10A	560061	RR. JCT. BOX	PRIME PUMP
F 22	14.1	10A	562407	FR. JCT. BOX	POWER 12V OUTLET
F 23	14.1	15A	562604	FR. JCT. BOX	DRIVER'S WINDOW LIFTER
F 24	14.1	15A	562604	FR. JCT. BOX	CIGAR LIGHTER
F 25	14.1	3A	562599	FR. JCT. BOX	SUN VISOR
F 26	26.1	5A	562259	FR. JCT. BOX	WATER HTR TIMER
F 27	17.1	5A	562259	RR. JCT. BOX	GALLEY LAMP & LAVATORY NIGHT LTS.
F 28	17.1	10A	562407	RR. JCT. BOX	LAVATORY PUMP
F 29	17.1	7.5A	562602	RR. JCT. BOX	LAVATORY LTS
F 31	17.1	5A	562259	FR. JCT. BOX	FRONT DESTINATION SIGN ELECTRONIC
F 31	17.1	7.5A	562602	FR. JCT. BOX	FRONT DESTINATION SIGN ELECTRIC
F 32	11.3	5A	562259	FR. JCT. BOX	PASSENGER NO SMOKING LTS
F 33	18.1	5A	562259	FR. JCT. BOX	KNEELING SYSTEM
F 34	19.1	3A	562599	FR. JCT. BOX	LUGGAGE DOOR LOCK
F 39	22.1	10A	562407	FR. JCT. BOX	UPPER WINDSHIELD FAN DEFROST
F 40	22.1	20A	562605	FR. JCT. BOX	HEATED WINDSCHIELD LH
F 41	22.1	20A	562605	FR. JCT. BOX	HEATED WINDSCHIELD RH
F 46	24.1	7.5A	562602	FR. JCT. BOX	MIRROR ADJUST & HEATED 24V SPARTAN
F 47	24.3	7.5A	562407	FR. JCT. BOX	MIRROR ADJUST & HEATED 12V RAMCO
F 48	25.2	10A	562407	RR. JCT. BOX	WHEEL CHAIR LIFT POWER CONTROL
F 49	26.1	20A	562605	RR. JCT. BOX	PRE-HEAT WATER HEATER WEBASTO
F 50	26.1	20A	562605	RR. JCT. BOX	PRE-HEAT WATER HEATER
F 51	11.2	7.5A	562602	RR. JCT. BOX	HAR RACK CPT LTS
F 57	17.1	5A	562259	RR. JCT. BOX	LAVATORY FLUORESCENT
F 58	11.3	10A	562407	RR. JCT. BOX	INDIRECT LIGHTING L.H.
F 59	4.1	3A	562599	RR. JCT. BOX	GENERATOR RUN RLY.
F 60	17.1	10A	562407	RR. JCT. BOX	LAVATORY FAN
F 61	27.1	1A	560893	FR. JCT. BOX	INTERCOM
F 62	2.1	3A	562599	RR. JCT. BOX	PRO-LINK & FIRE ALARM
F 63	27.1	3A	560893	MON. CLARION	BACK-UP MONITOR CLARION
F 70	23.1	7.5A	562602	GALLEY PANEL	GALLEY RH CONTAINER
F 71	23.1	7.5A	562602	GALLEY PANEL	GALLEY LH CONTAINER
F 72	23.1	10A	562407	GALLEY PANEL	GALLEY REFRIGERATOR COMPRESSOR
F 73	23.1	35A	562608	GALLEY PANEL	GALLEY COFFEMAKER
F 74	23.1	7.5	560598	BAT. CPT.	GALLEY REFRIGERATOR

LOGIC GATE

TRUTH TABLE

AND GATE

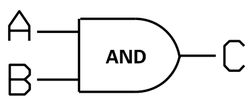

INPUT		OUT
A	B	C
Ø	Ø	Ø
Ø	1	Ø
1	Ø	Ø
1	1	1

•OUTPUT IS 1 WHEN ALL INPUT IS 1

NAND GATE

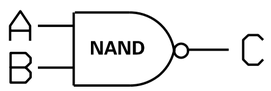

INPUT		OUT
A	B	C
Ø	Ø	1
Ø	1	1
1	Ø	1
1	1	Ø

• OUTPUT IS Ø WHEN ALL INPUT IS Ø

OR GATE

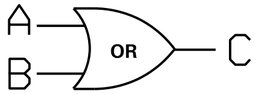

INPUT		OUT
A	B	C
Ø	Ø	Ø
Ø	1	1
1	Ø	1
1	1	1

• OUTPUT IS 1 WHEN EITHER INPUT IS 1

NOR GATE

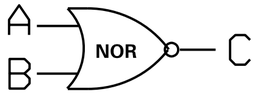

INPUT		OUT
A	B	C
Ø	Ø	1
Ø	1	Ø
1	Ø	Ø
1	1	Ø

• OUTPUT IS 1 WHEN NONE INPUT IS 1

NOT GATE

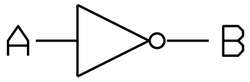

INPUT	OUT
A	B
Ø	1
1	Ø

• OUTPUT IS REVERSE OF INPUT

ON-DELAY

XX SECOND
AFTER A=1
THAN B=1

OFF-DELAY

XX SECOND
AFTER A=Ø
THAN B=Ø

POSITIVE INPUT

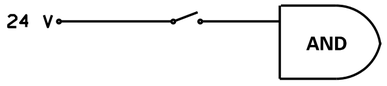

INPUT CONNECTED WITH SIGNAL 12 VOLTS OR 24 VOLTS WHEN ACTIVATING

SINKING INPUT

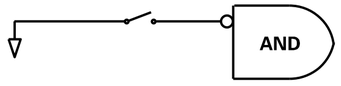

INPUT CONNECTED WITH SIGNAL GROUND WHEN ACTIVATING

INPUT OR OUTPUT LEVEL

LEVEL 1 = 12 VOLTS OR 24 VOLTS

LEVEL Ø = Ø VOLT (TO GROUND)

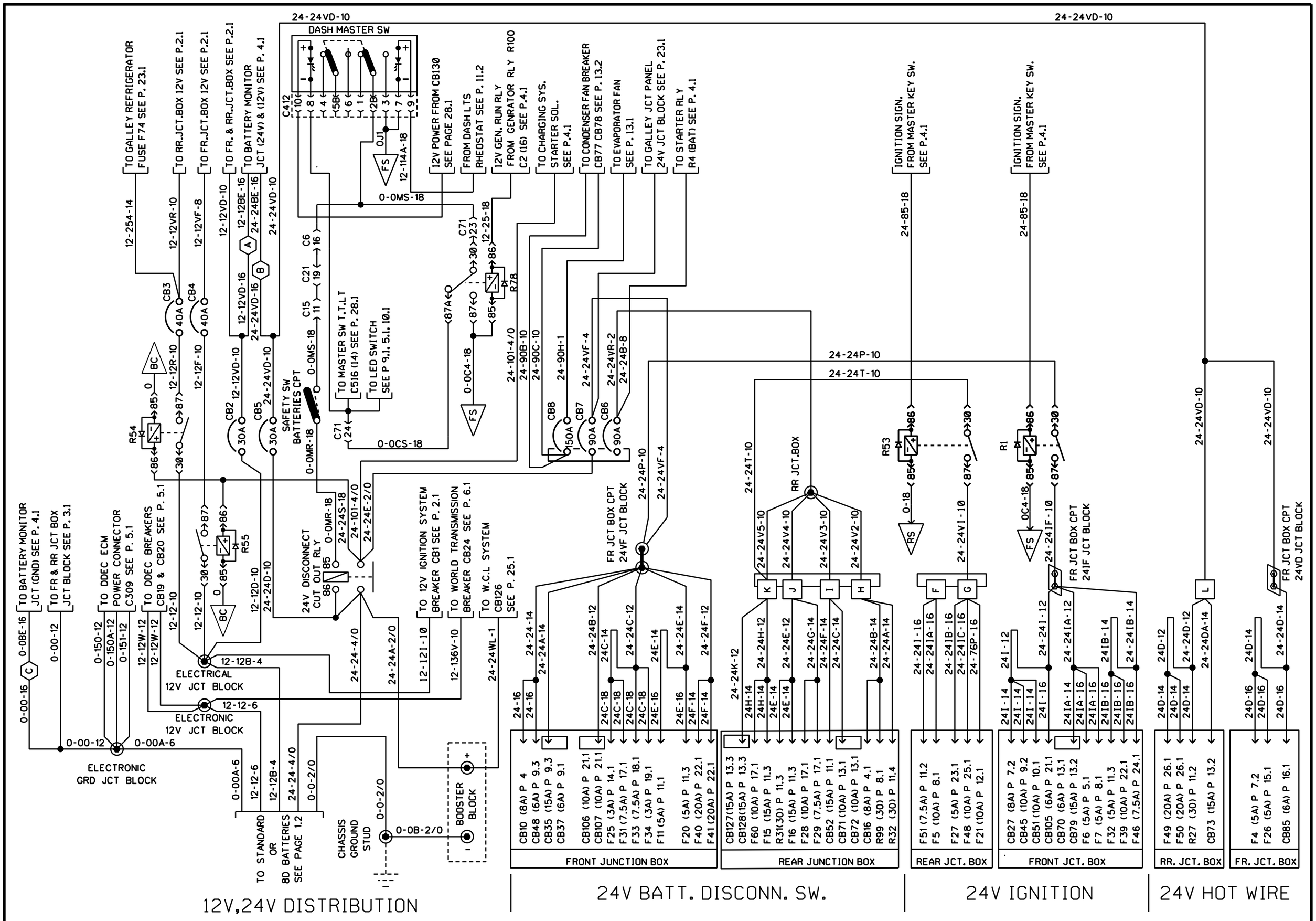

PREVOST	WIRING DIAGRAM	NO: D060902	PAGE: 1.1	REVISION 00

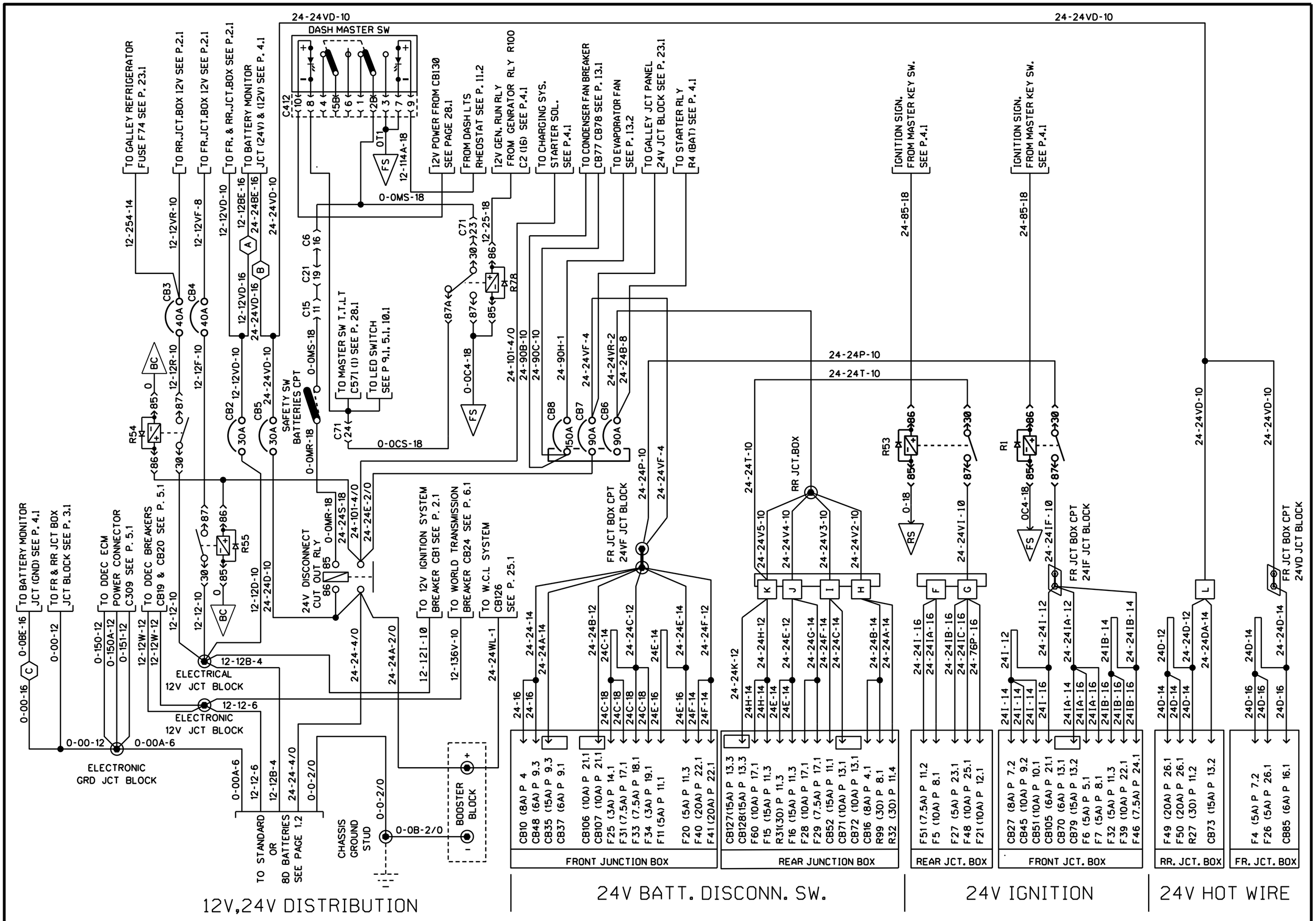

PREVOST	WIRING DIAGRAM	NO: D060902	PAGE: 1.1	REVISION 01

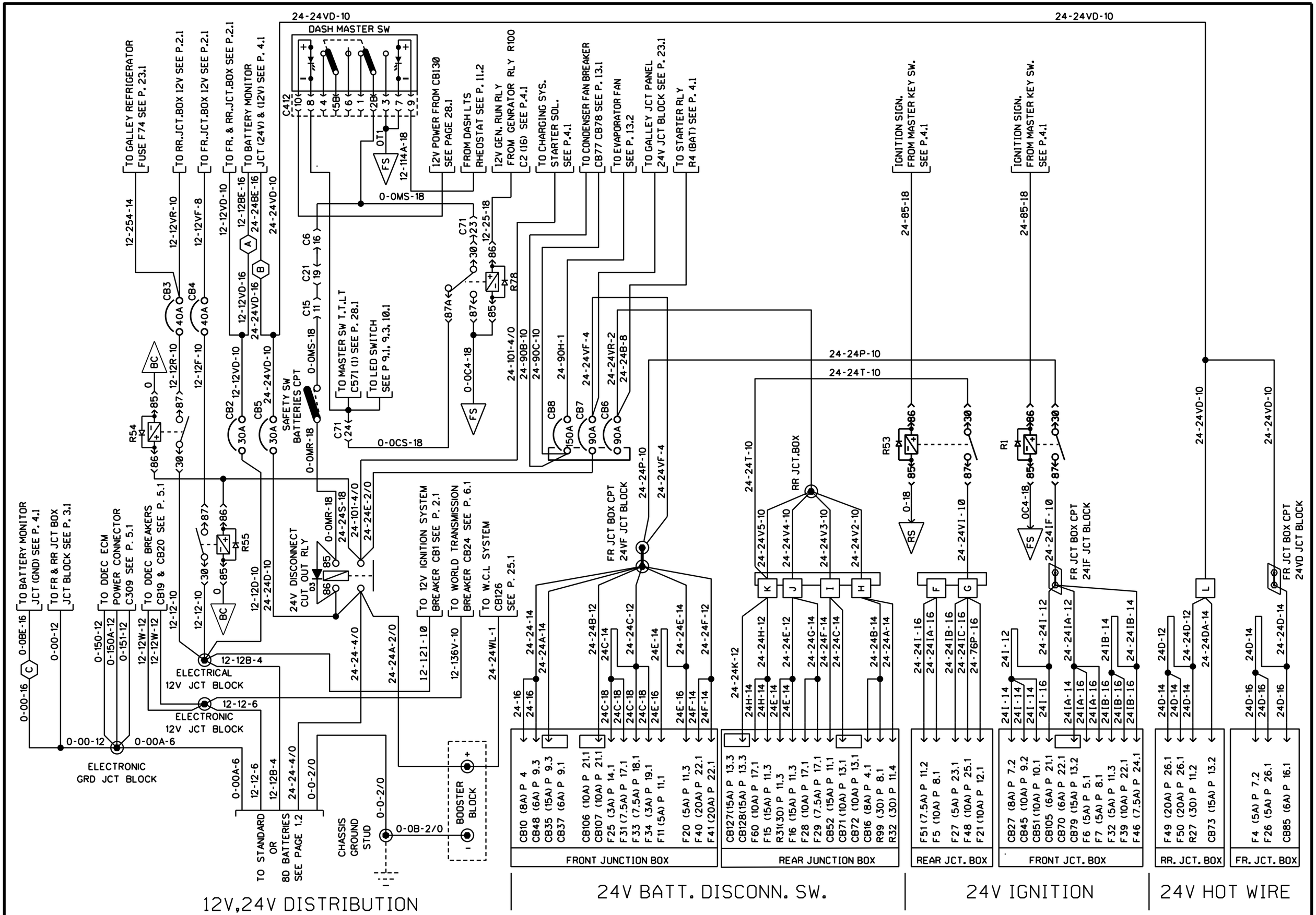

PREVOST	WIRING DIAGRAM	NO: D060902	PAGE: 1.1	REVISION 02

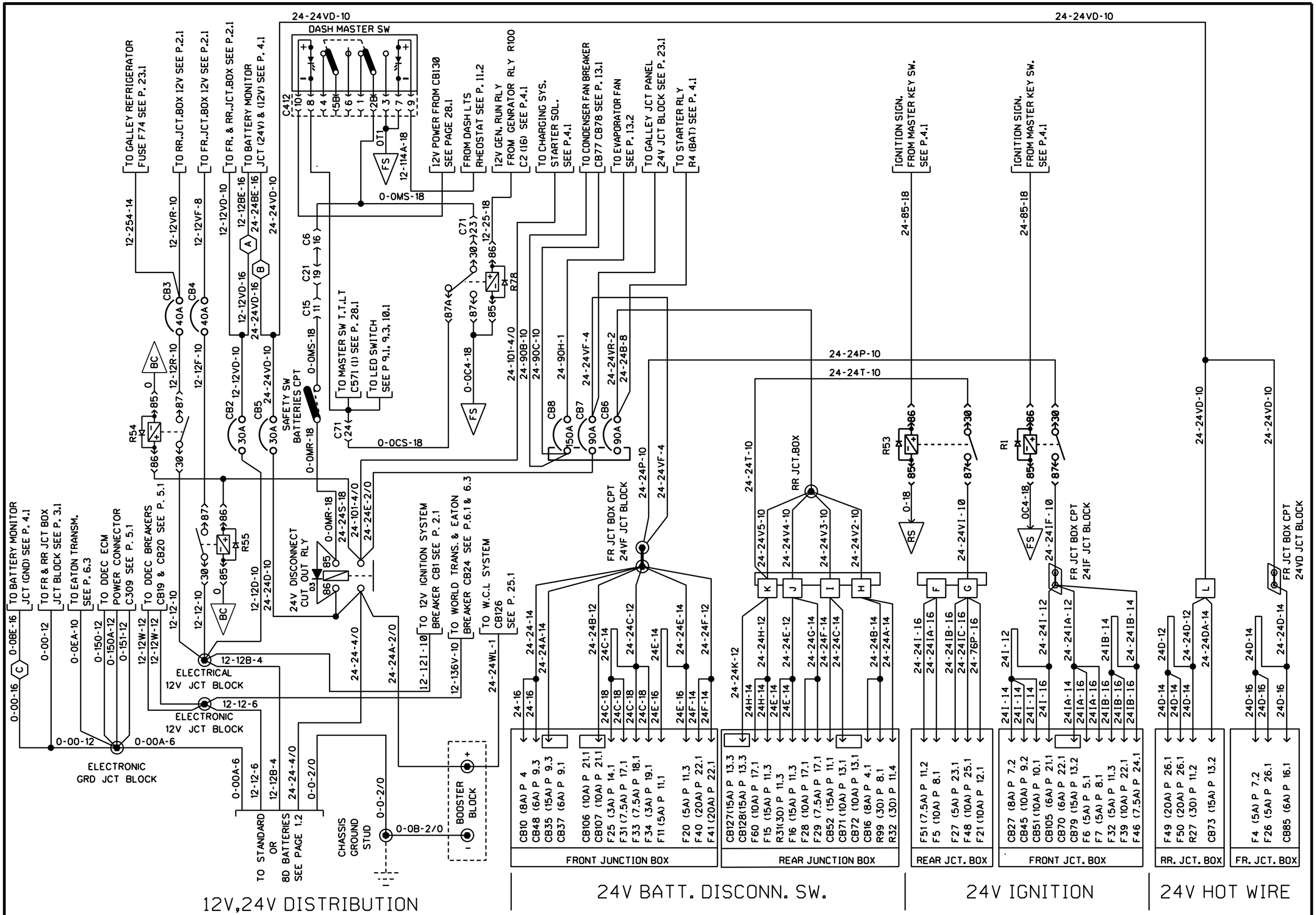

PREVOST	WIRING DIAGRAM	NO: D060902	PAGE: 1.1	REVISION 08

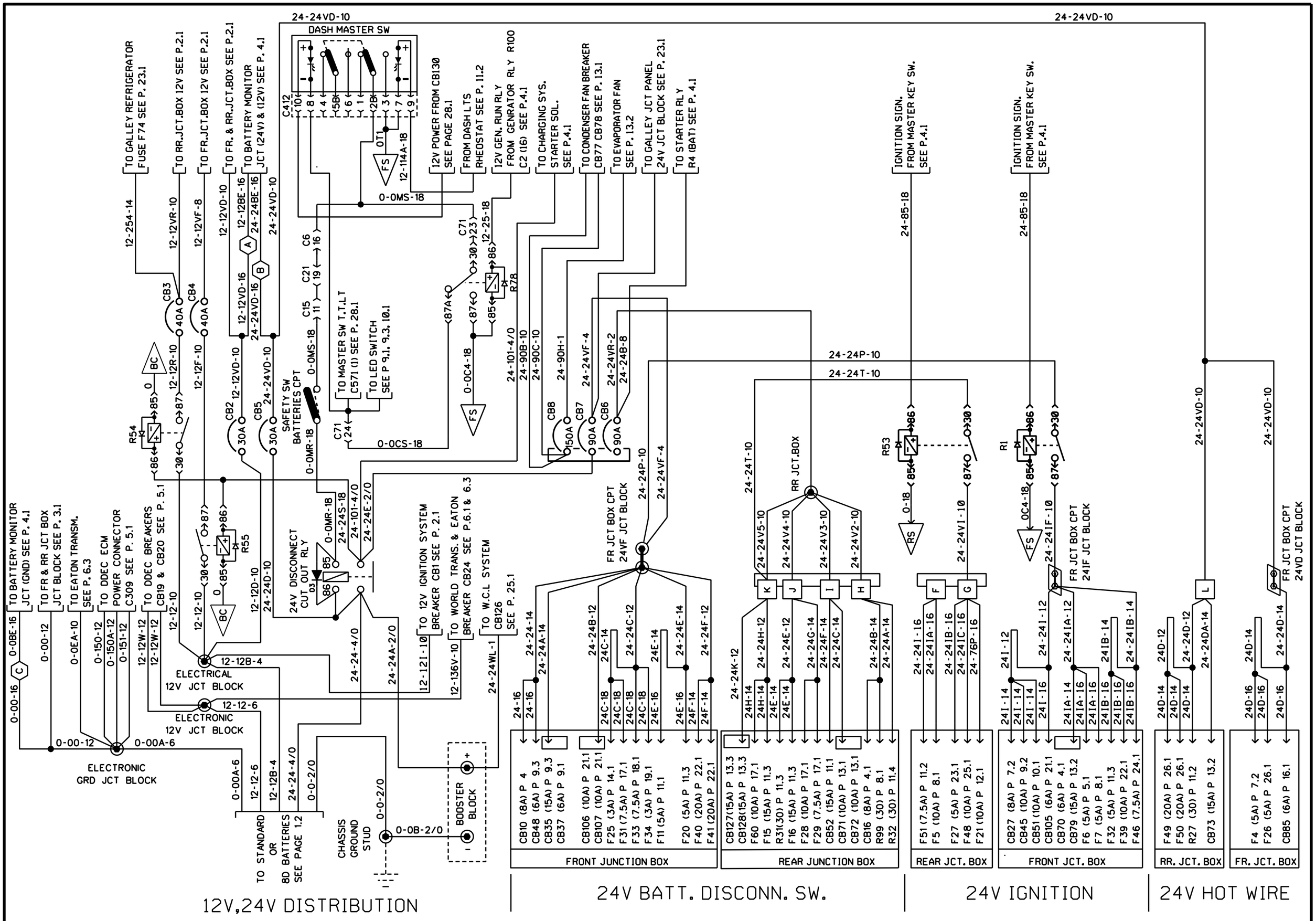

PREVOST | WIRING DIAGRAM | NO: D060902 | PAGE: 1.1 | REVISION 12

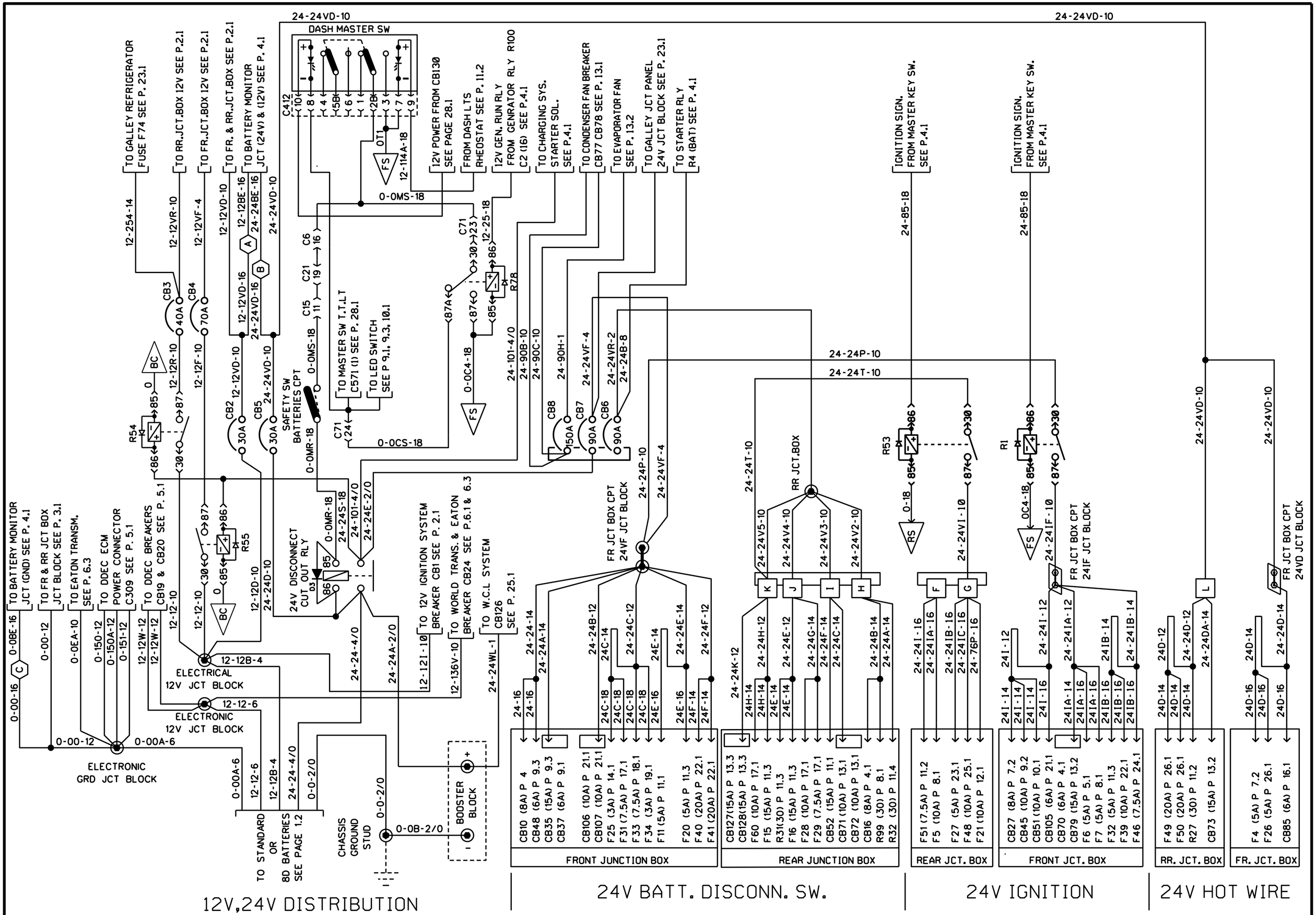

PREVOST | WIRING DIAGRAM | NO: D060902 | PAGE: 1.1 | REVISION 15

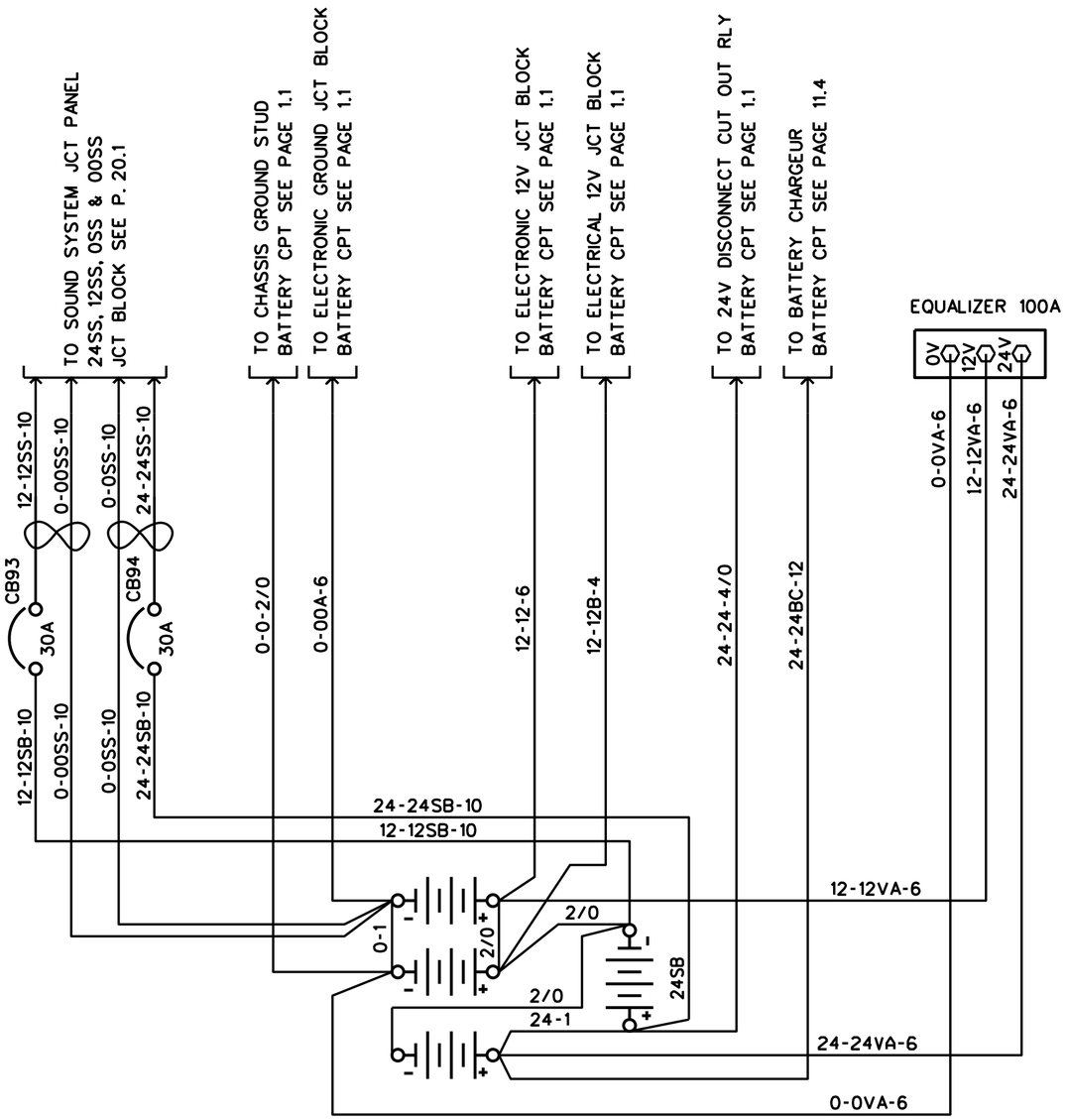

STANDARD BATTERIES

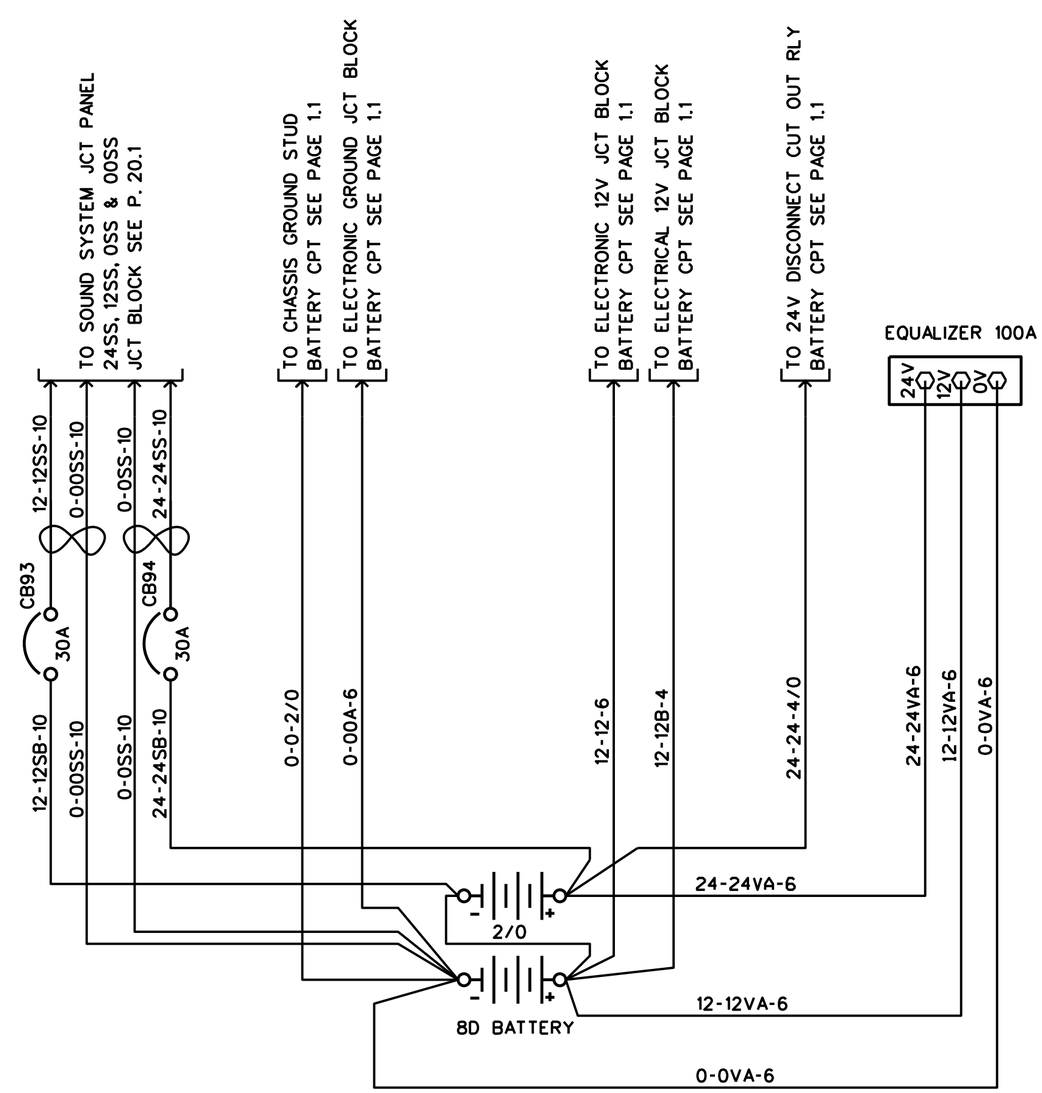

8D BATTERIES

PREVOST	WIRING DIAGRAM	NO: D060902	PAGE: 1.2	REVISION 00

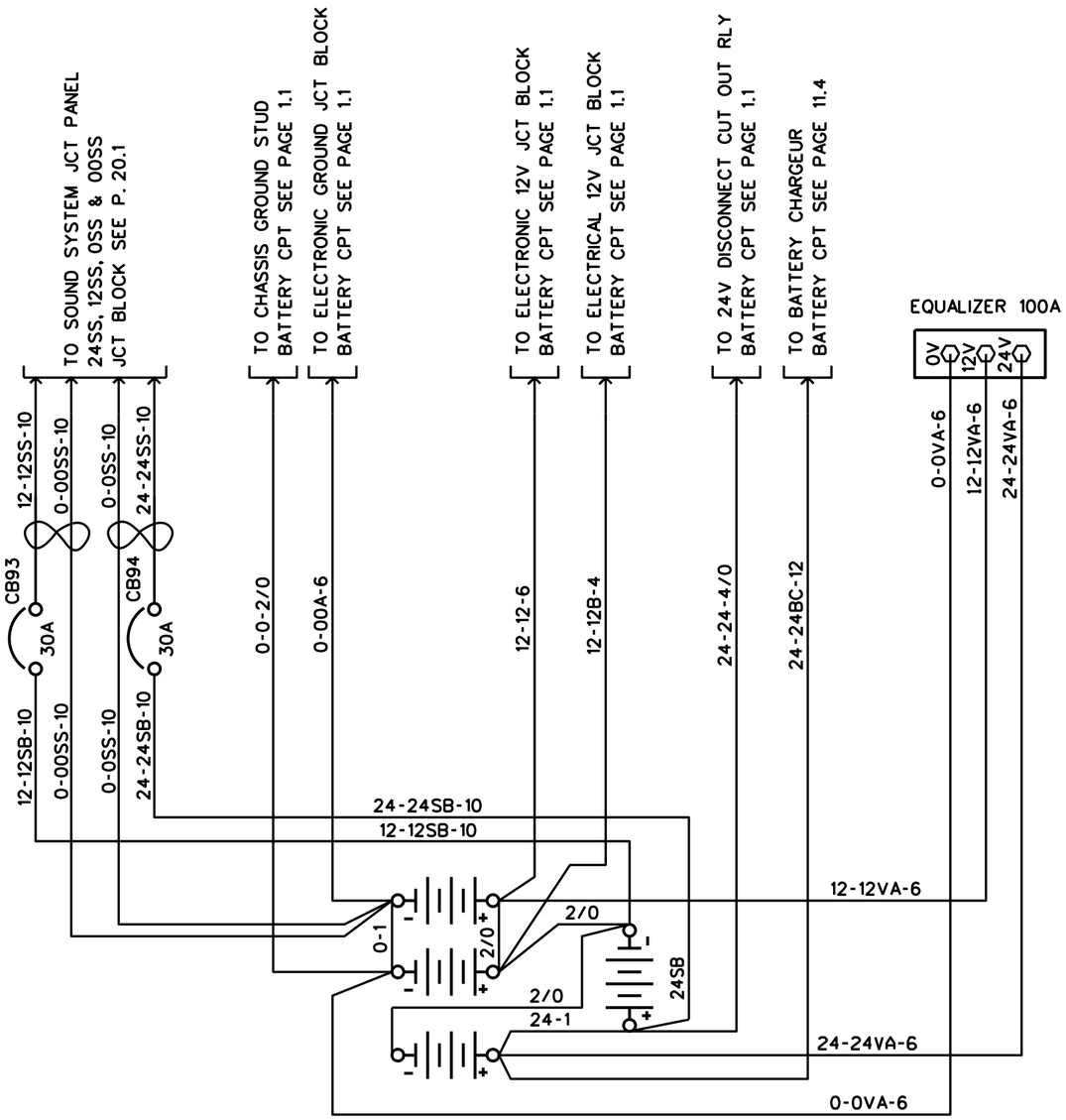

STANDARD BATTERIES

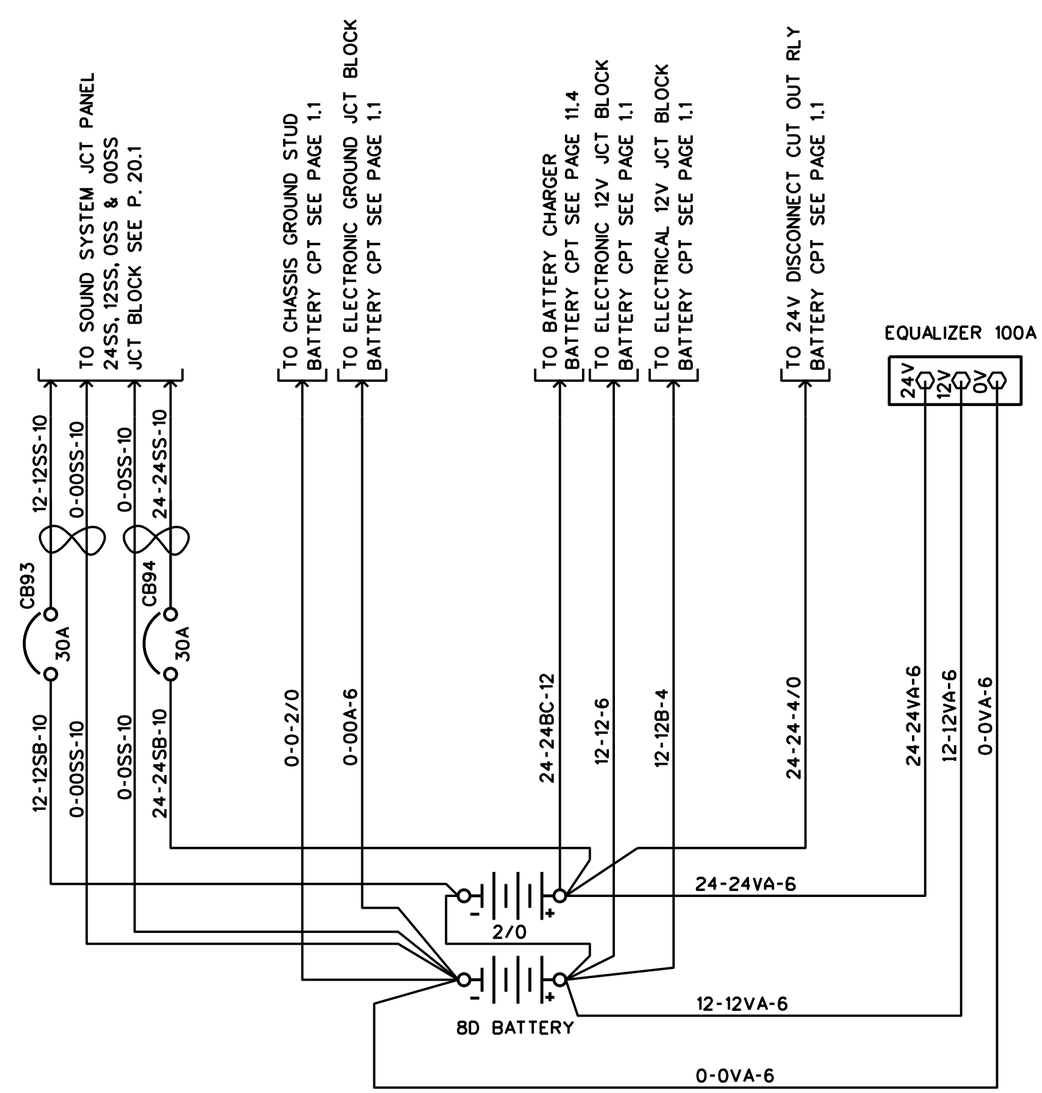

8D BATTERIES

PREVOST	WIRING DIAGRAM	NO: D060902	PAGE: 1.2	REVISION 12

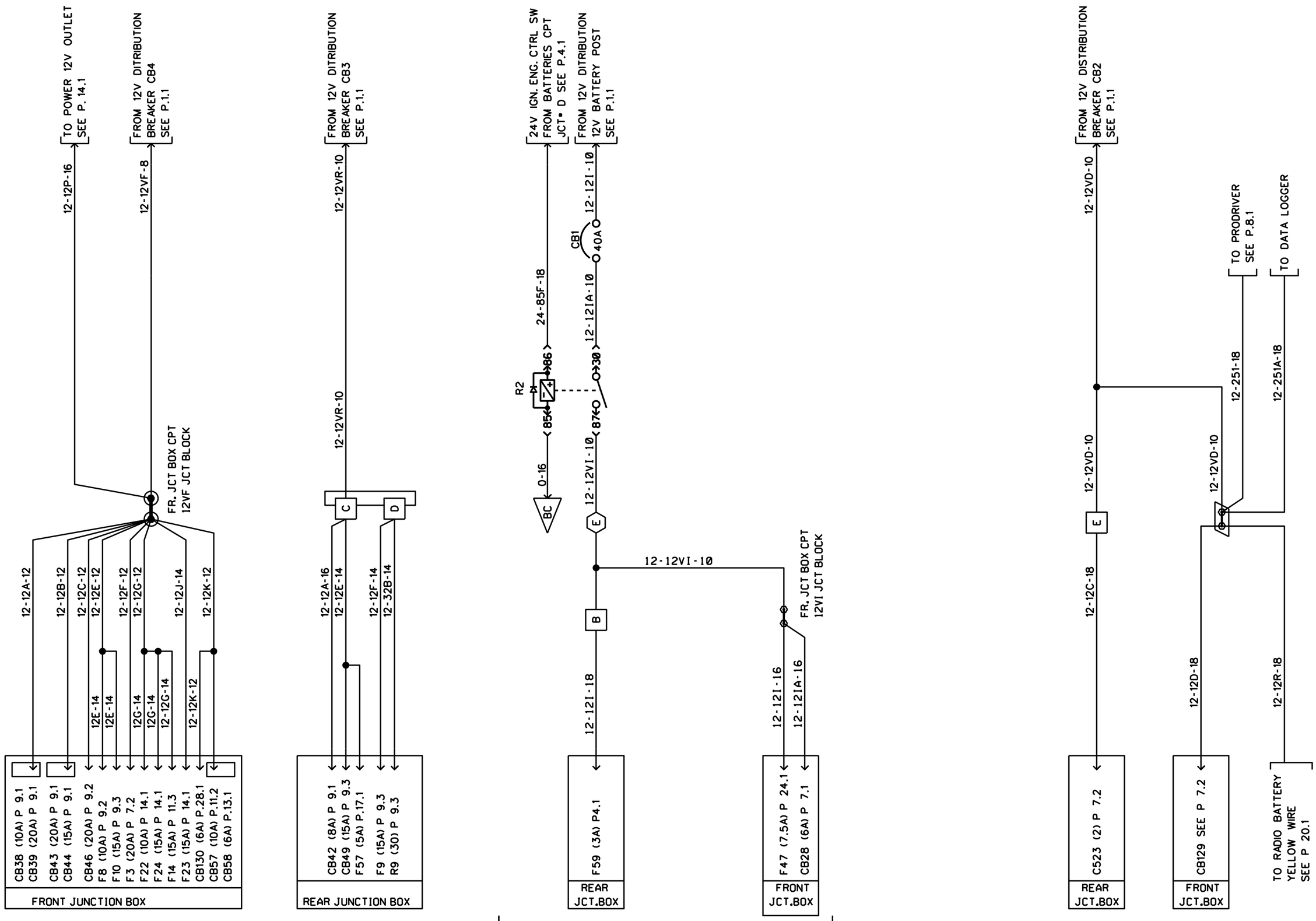

PREVOST	WIRING DIAGRAM	NO: D060902	PAGE: 2.1	REVISION 00

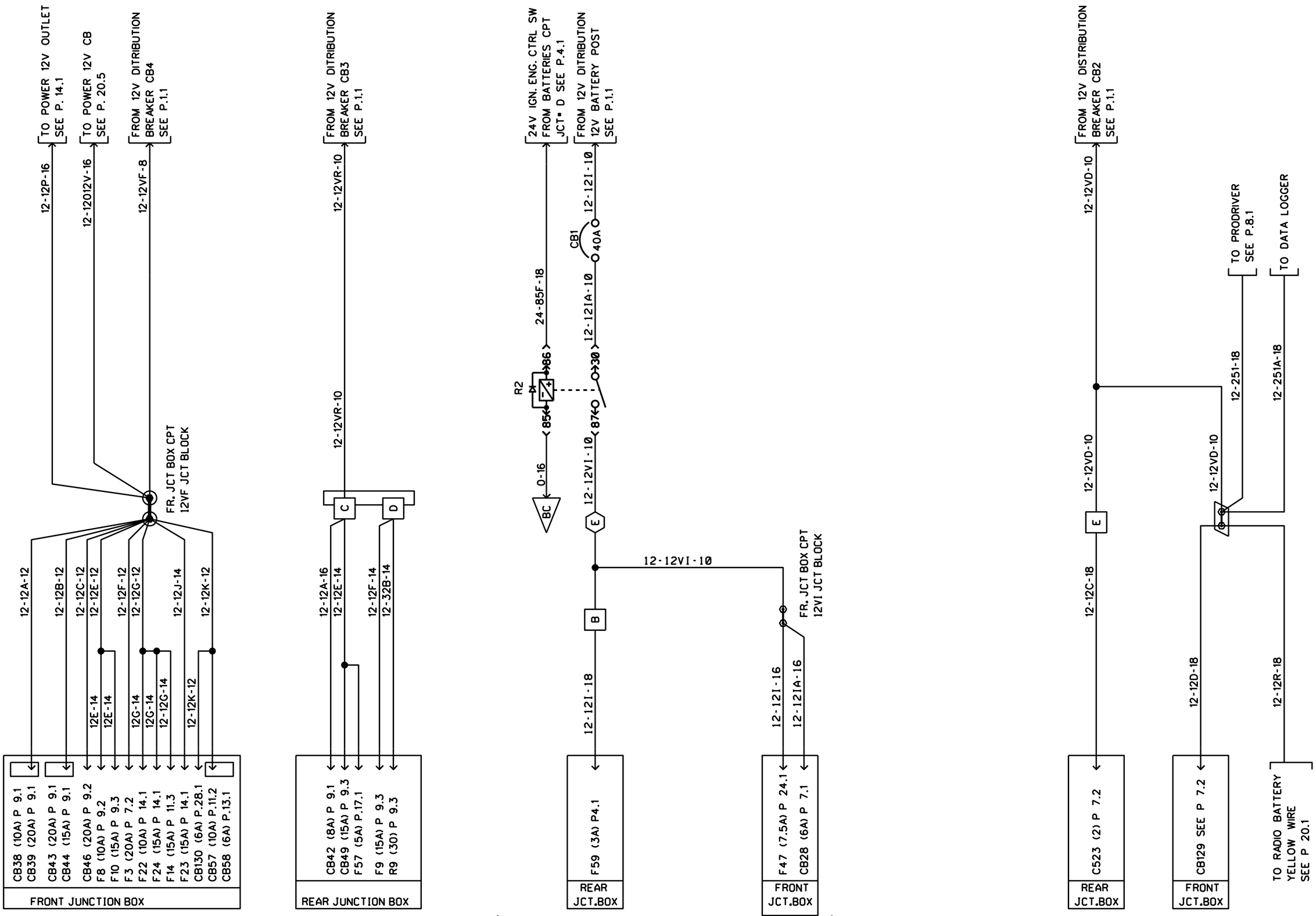

PREVOST	WIRING DIAGRAM	NO: D060902	PAGE: 2.1	REVISION 05

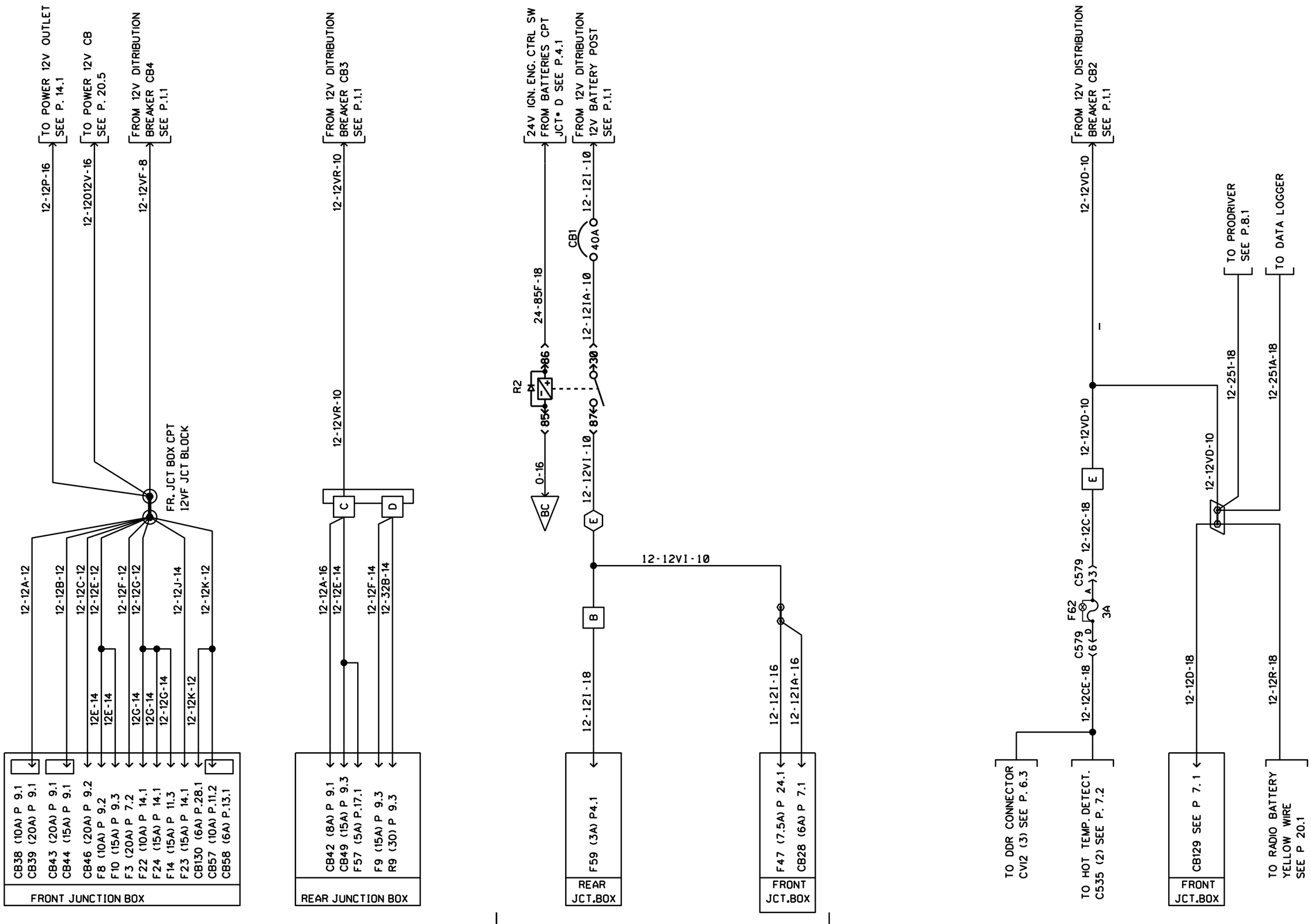

PREVOST	WIRING DIAGRAM	NO: D060902	PAGE: 2.1	REVISION 08

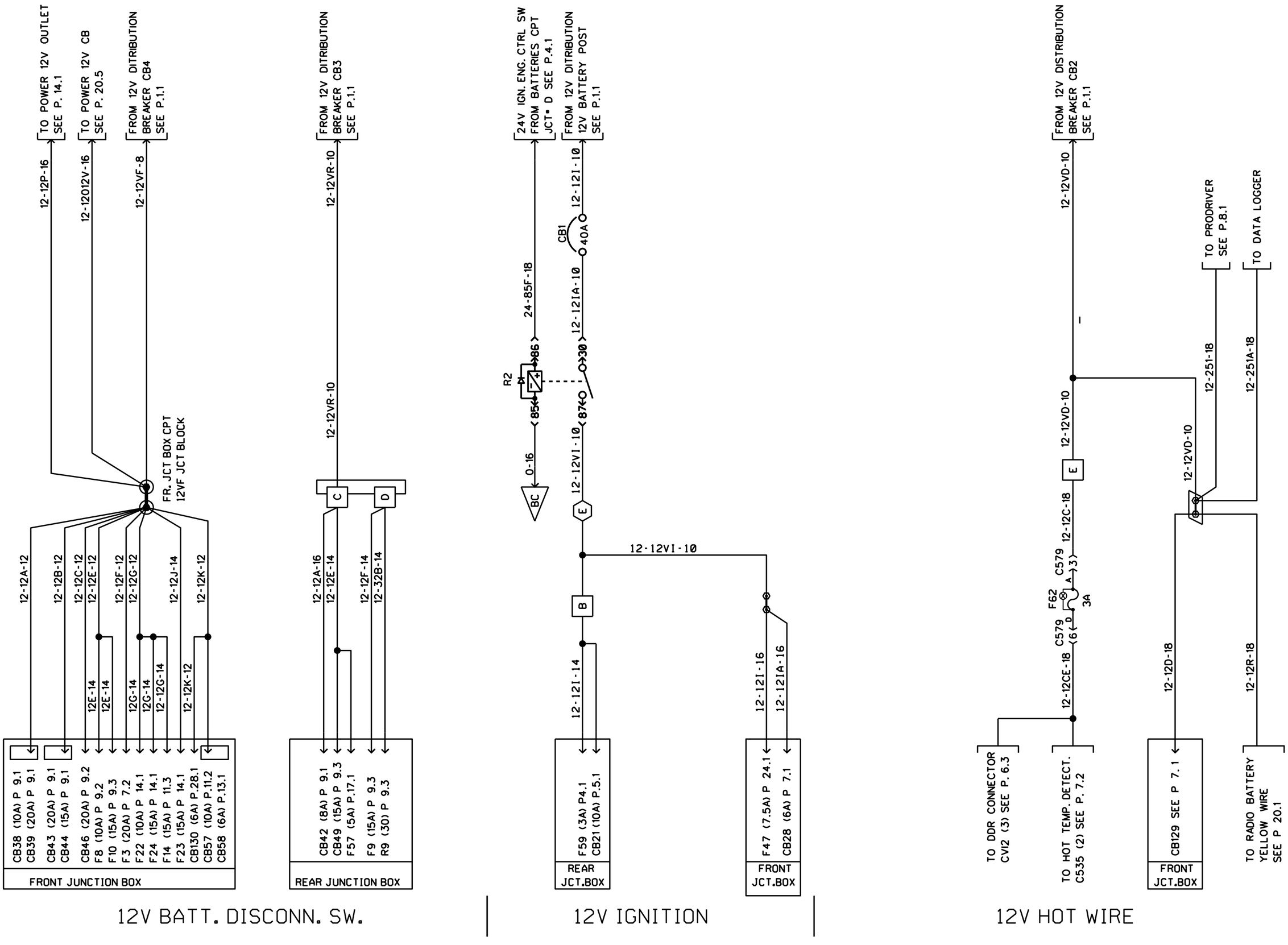

PREVOST	WIRING DIAGRAM	NO: D060902	PAGE: 2.1	REVISION 09

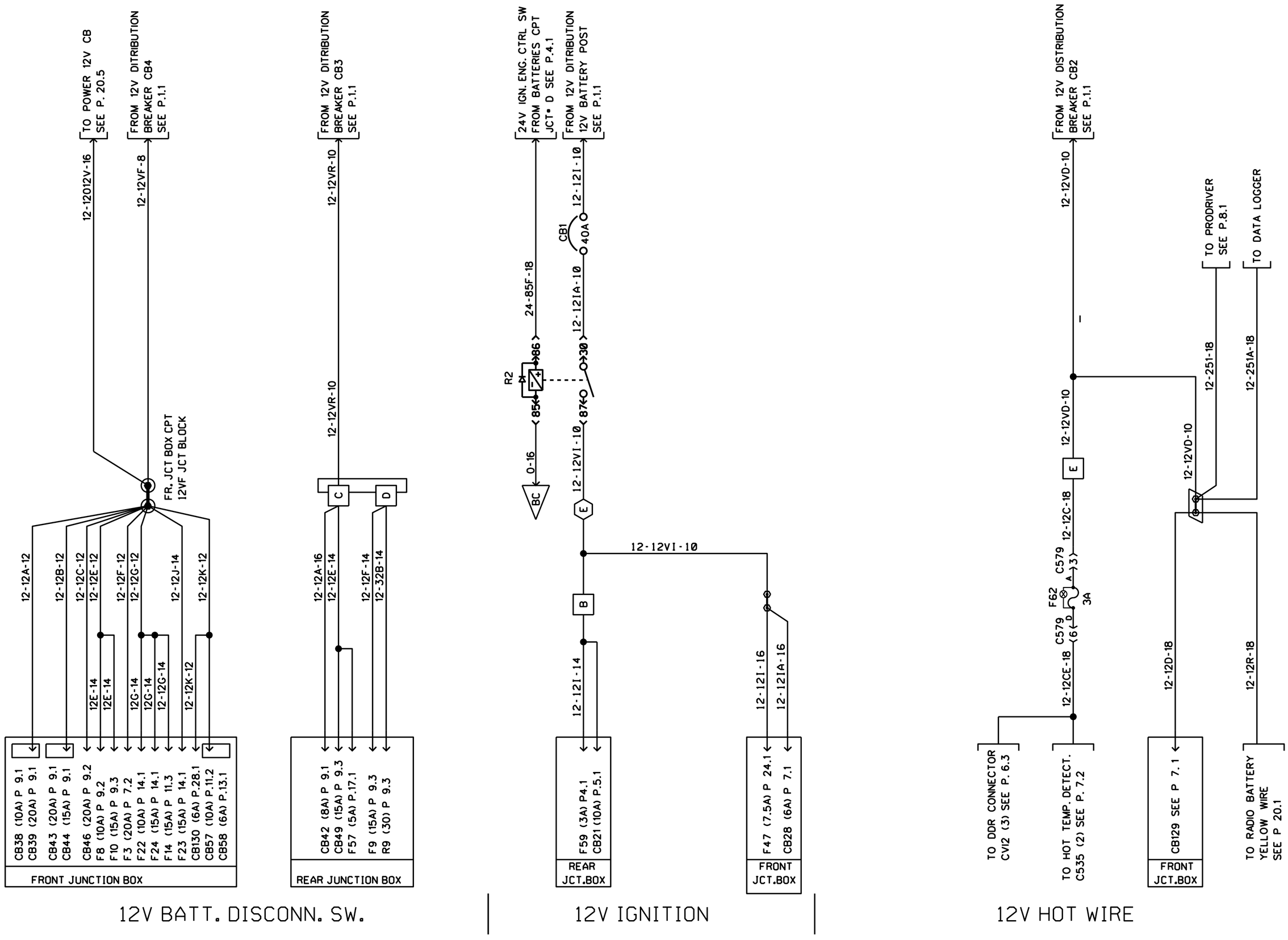

PREVOST	WIRING DIAGRAM	NO: D060902	PAGE: 2.1	REVISION 12

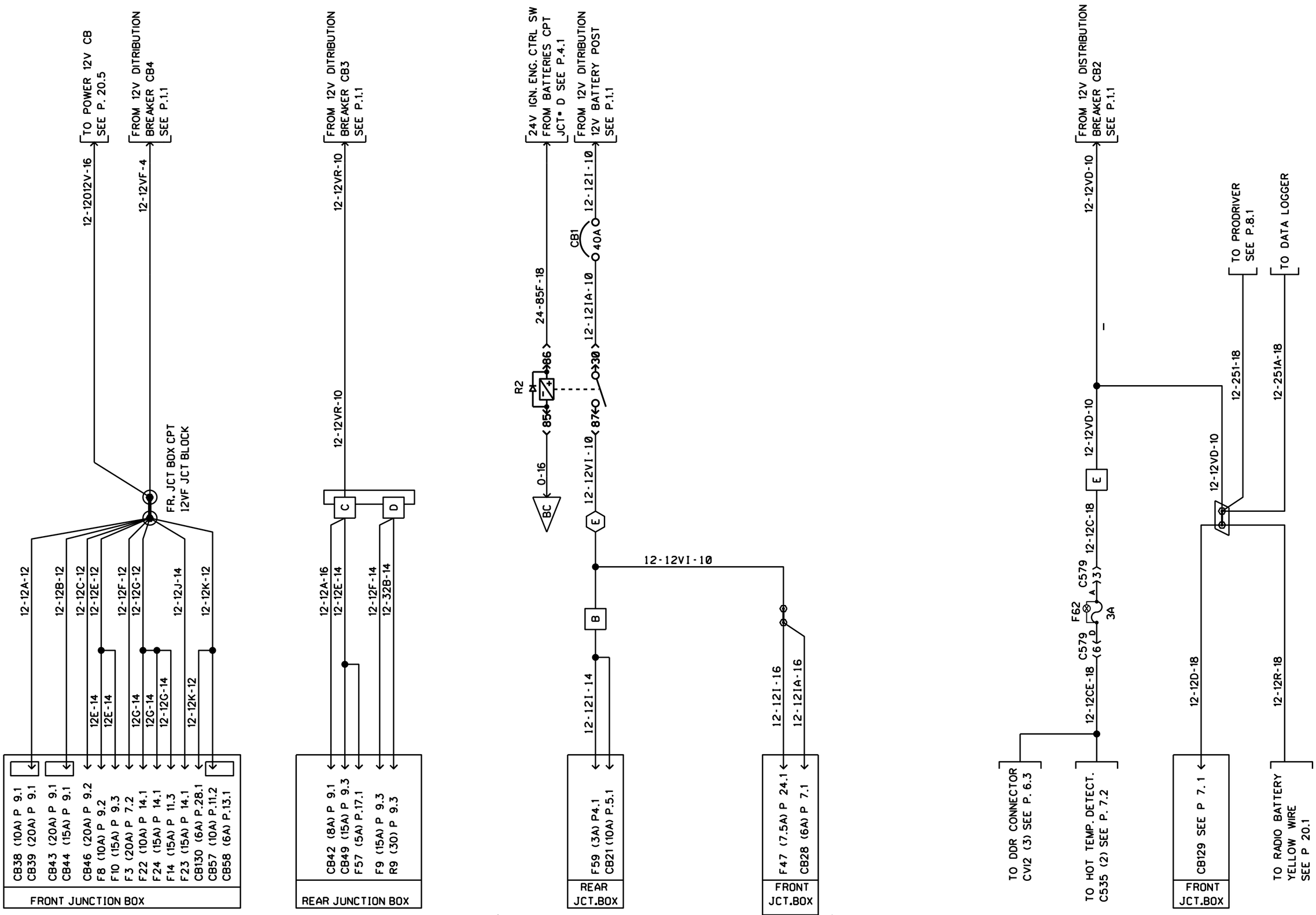

PREVOST	WIRING DIAGRAM	NO: D060902	PAGE: 2.1	REVISION 15

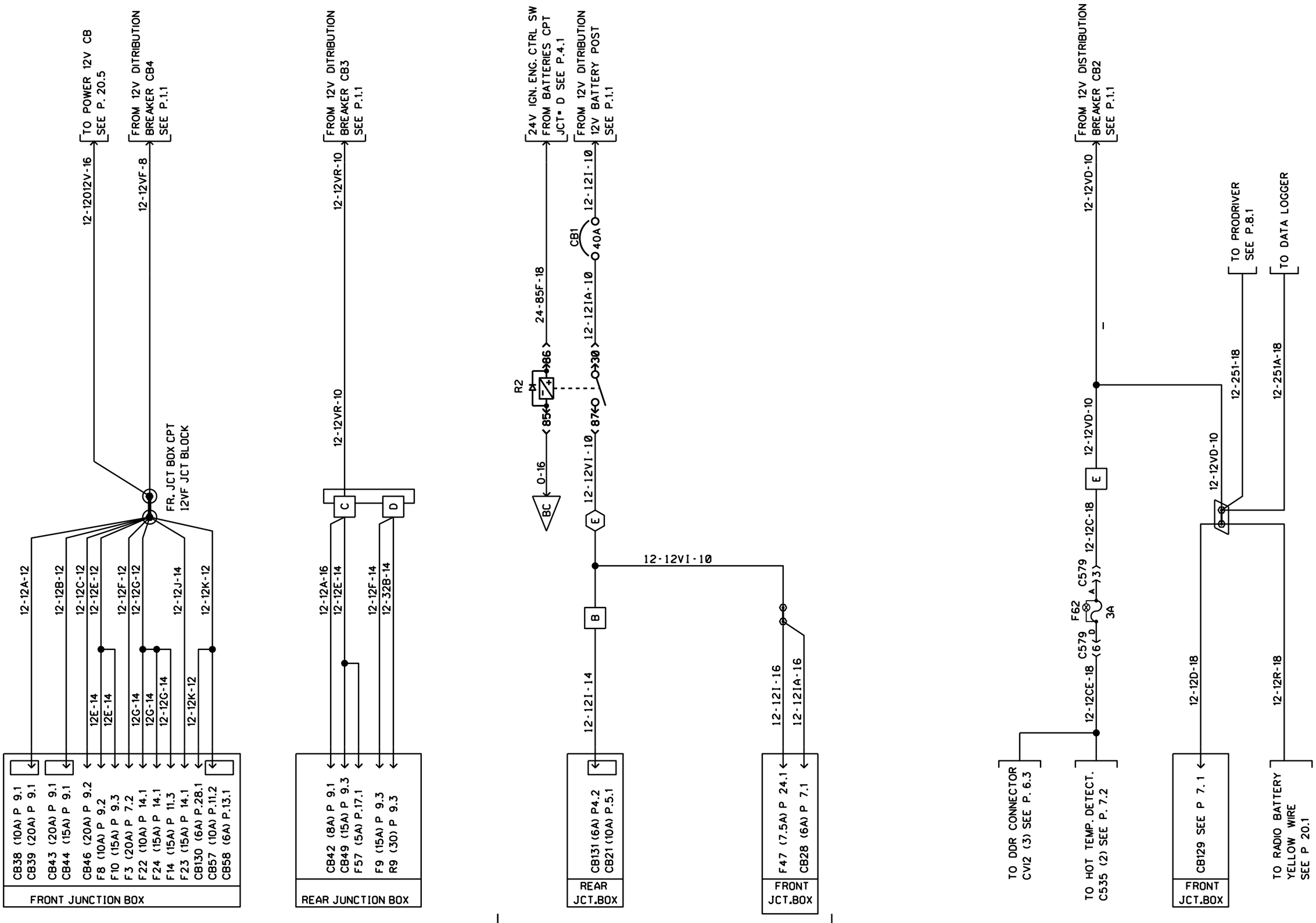

PREVOST	WIRING DIAGRAM	NO: D060902	PAGE: 2.1	REVISION 16

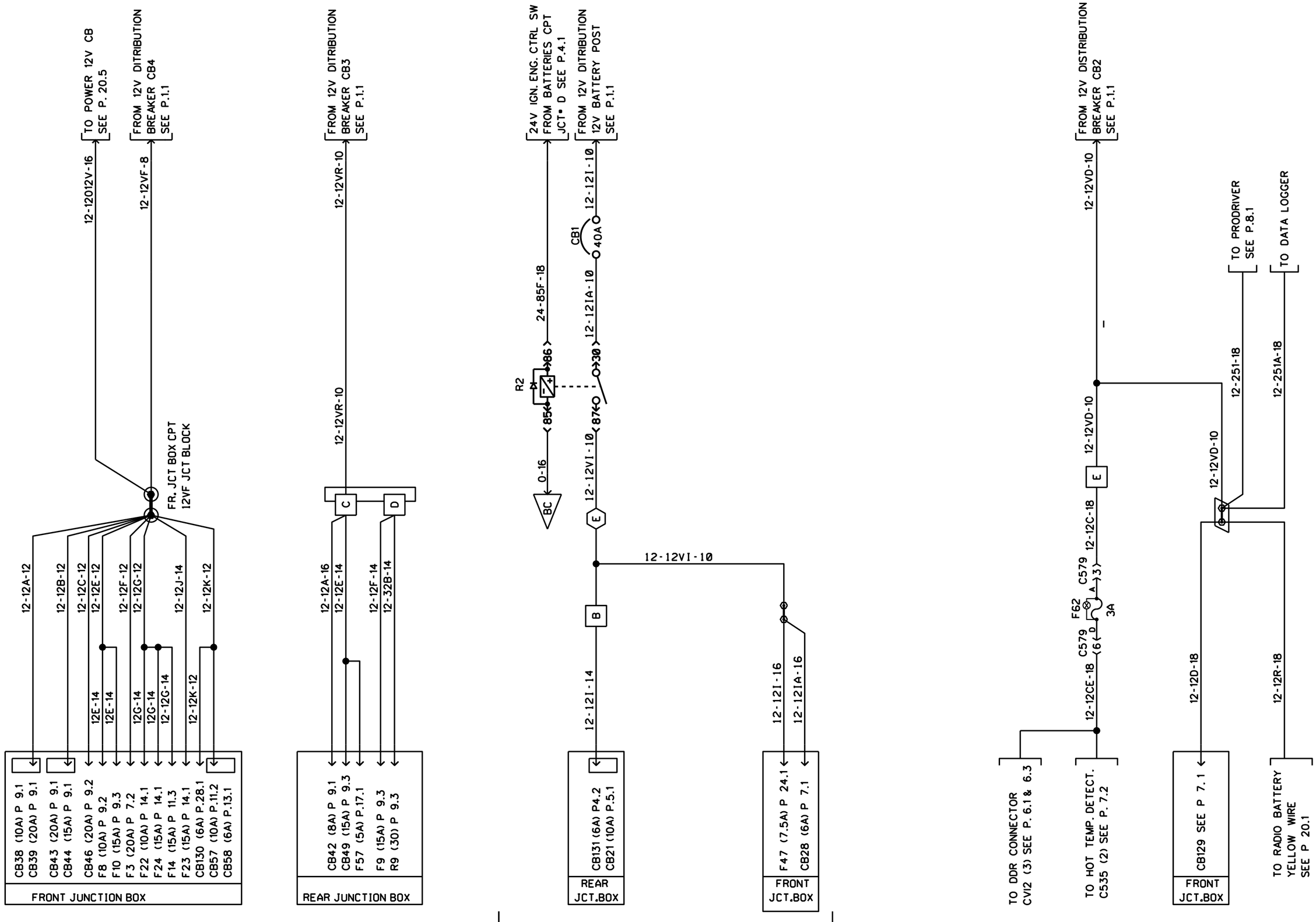
TO POWER 12V CB
SEE P. 20.5
12-12012V-16
FROM 12V DITRIBUTION
BREAKER CB4
SEE P.1.1
12-12VF-8
FROM 12V DITRIBUTION
BREAKER CB3
SEE P.1.1
12-12VR-10
24V IGN. ENG. CTRL SW
FROM BATTERIES CPT
JCT• D SEE P.4.1
FROM 12V DITRIBUTION
12V BATTERY POST
SEE P.1.1
12-12I-10
CB1
40A
24-85F-18
12-121A-10
R2
86
30
85
87
0-16
BC
12-12VI-10
E
B
12-12VI-10
12-121I-14
12-121I-16
12-121A-16
FR. JCT BOX CPT
12VF JCT BLOCK
12-12A-12
12-12B-12
12-12C-12
12-12E-12
12-12F-12
12-12G-12
12-12J-14
12-12K-12
12E-14
12E-14
12G-14
12G-14
12-12G-14
12-12K-12
CB38 (10A) P 9.1
CB39 (20A) P 9.1
CB43 (20A) P 9.1
CB44 (15A) P 9.1
CB46 (20A) P 9.2
F8 (10A) P 9.2
F10 (15A) P 9.3
F3 (20A) P 7.2
F22 (10A) P 14.1
F24 (15A) P 14.1
F14 (15A) P 11.3
F23 (15A) P 14.1
CB130 (6A) P.28.1
CB57 (10A) P.11.2
CB58 (6A) P.13.1
FRONT JUNCTION BOX
C
D
12-12A-16
12-12E-14
12-12F-14
12-32B-14
CB42 (8A) P 9.1
CB49 (15A) P 9.3
F57 (5A) P.17.1
F9 (15A) P 9.3
R9 (30) P 9.3
REAR JUNCTION BOX
CB131 (6A) P4.2
CB21 (10A) P.5.1
REAR
JCT.BOX
F47 (7.5A) P 24.1
CB28 (6A) P 7.1
FRONT
JCT.BOX
12V BATT. DISCONN. SW.
12V IGNITION
FROM 12V DISTRIBUTION
BREAKER CB2
SEE P.1.1
12-12VD-10
TO PRODRIVER
SEE P.8.1
TO DATA LOGGER
12-251-18
12-251A-18
12-12VD-10
12-12VD-10
E
12-12C-18
C579
3
A
F62
3A
C579
6
D
12-12CE-18
12-12D-18
12-12R-18
TO DDR CONNECTOR
CV12 (3) SEE P. 6.1 & 6.3
TO HOT TEMP. DETECT.
C535 (2) SEE P. 7.2
CB129 SEE P 7.1
FRONT
JCT.BOX
TO RADIO BATTERY
YELLOW WIRE
SEE P 20.1
12V HOT WIRE

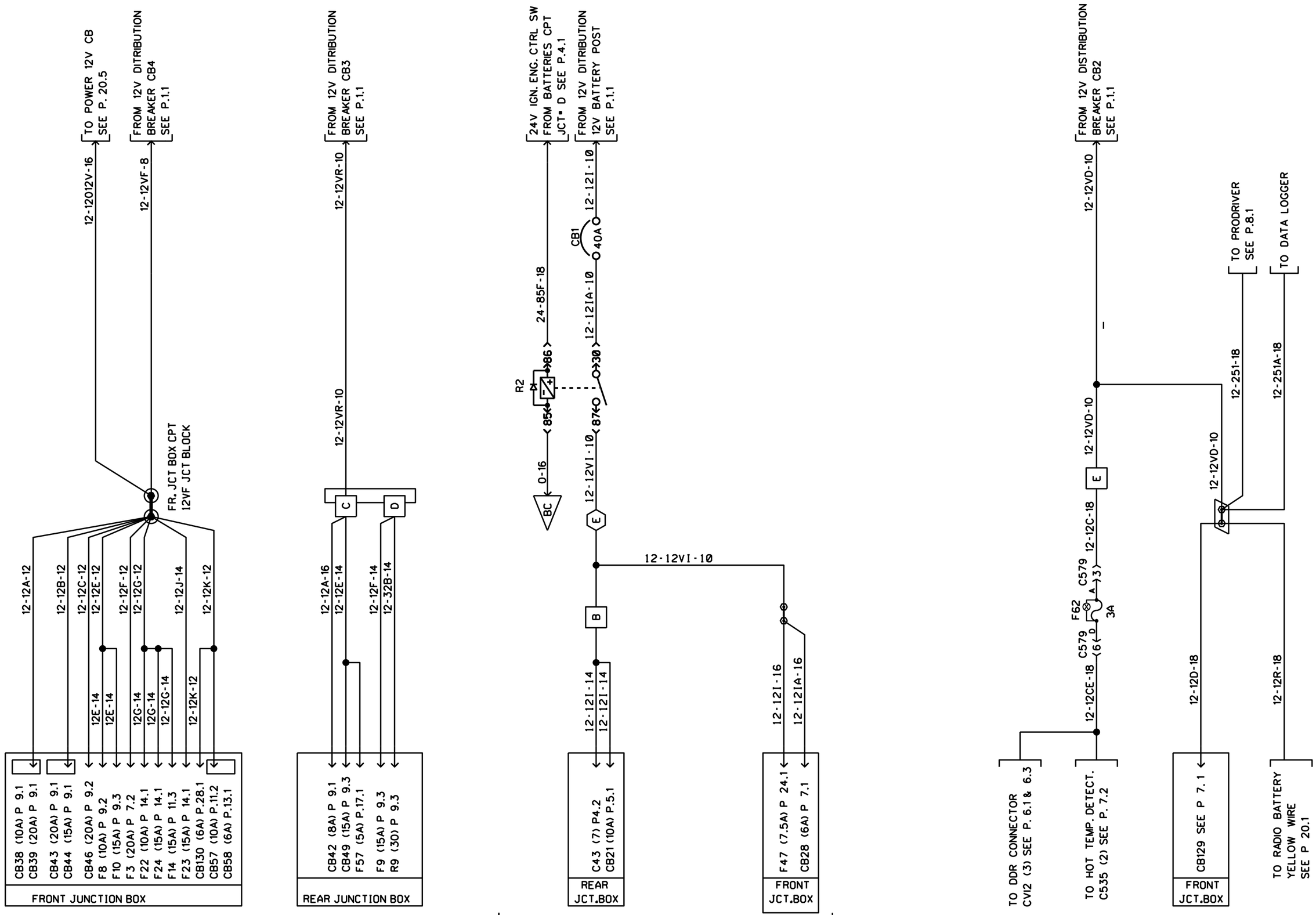

PREVOST	WIRING DIAGRAM	NO: D060902	PAGE: 2.1	REVISION 24

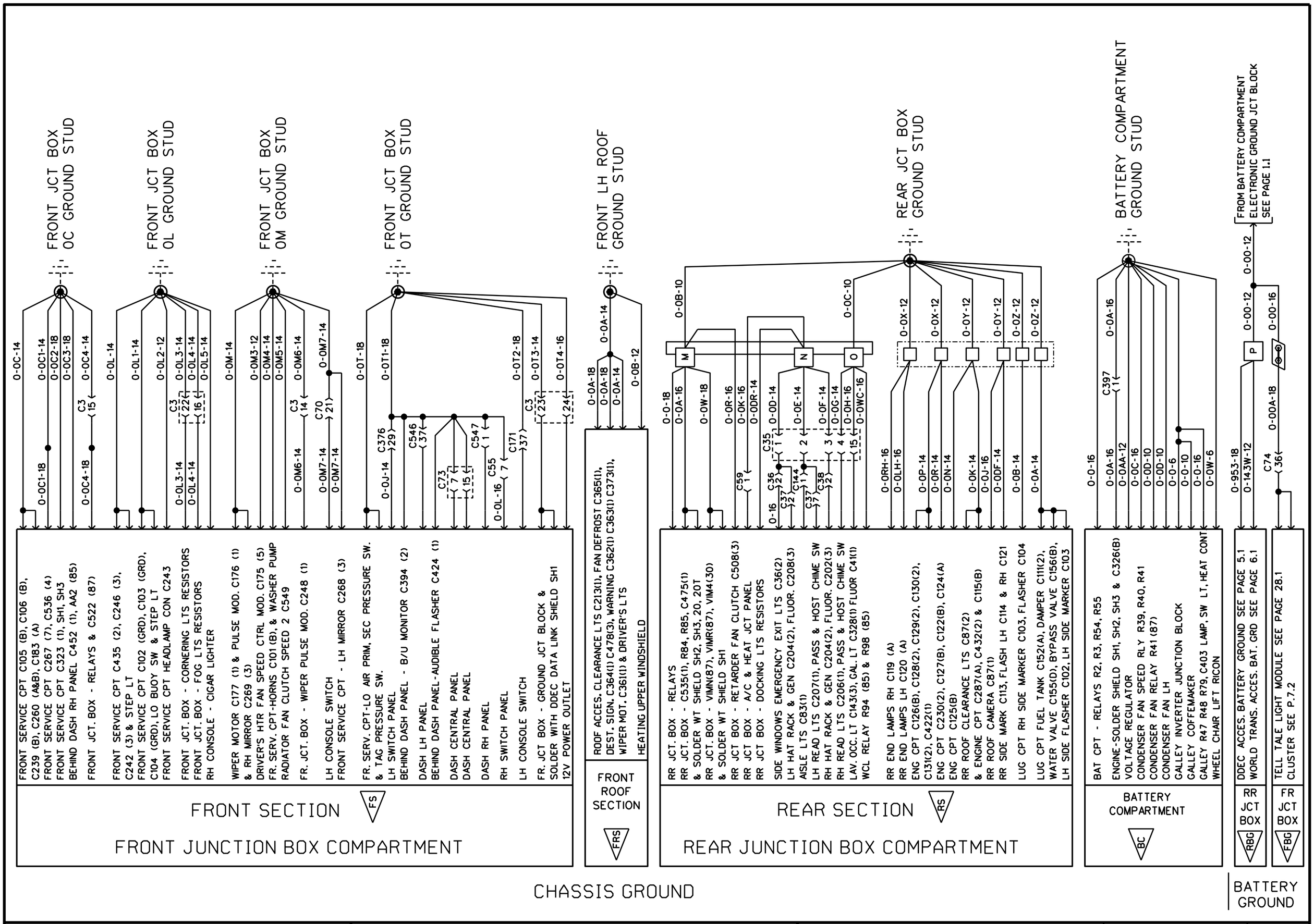
FRONT JCT BOX 0C GROUND STUD
FRONT JCT BOX 0L GROUND STUD
FRONT JCT BOX 0M GROUND STUD
FRONT JCT BOX 0T GROUND STUD
FRONT LH ROOF GROUND STUD
REAR JCT BOX GROUND STUD
BATTERY COMPARTMENT GROUND STUD
FROM BATTERY COMPARTMENT ELECTRONIC GROUND JCT BLOCK SEE PAGE 1.1
FRONT SERVICE CPT C105 (B), C106 (B), C239 (B), C260 (A&B), C183 (A)
FRONT SERVICE CPT C267 (7), C536 (4)
FRONT SERVICE CPT C323 (1), SH1, SH3
BEHIND DASH RH PANEL C452 (1), AA2 (85)
FRONT JCT. BOX - RELAYS & C522 (87)
FRONT SERVICE CPT C435 (2), C246 (3), C242 (3) & STEP LT
FRONT SERVICE CPT C102 (GRD), C103 (GRD), C104 (GRD), LO BUOY SW & STEP LT
FRONT SERVICE CPT HEADLAMP CON C243
FRONT JCT. BOX - CORNERING LTS RESISTORS
FRONT JCT. BOX - FOG LTS RESISTORS
RH CONSOLE - CIGAR LIGHTER
WIPER MOTOR C177 (1) & PULSE MOD. C176 (1) & RH MIRROR C269 (3)
DRIVER'S HTR FAN SPEED CTRL MOD. C175 (5)
FR. SERV. CPT-HORNS C101 (B), & WASHER PUMP
RADIATOR FAN CLUTCH SPEED 2 C549
FR. JCT. BOX - WIPER PULSE MOD. C248 (1)
LH CONSOLE SWITCH
FRONT SERVICE CPT - LH MIRROR C268 (3)
FR. SERV. CPT-LO AIR PRIM, SEC PRESSURE SW. & TAG PRESSURE SW.
LH SWITCH PANEL
BEHIND DASH PANEL - B/U MONITOR C394 (2)
DASH LH PANEL
BEHIND DASH PANEL-AUDIBLE FLASHER C424 (1)
DASH CENTRAL PANEL
DASH CENTRAL PANEL
DASH RH PANEL
RH SWITCH PANEL
LH CONSOLE SWITCH
FR. JCT BOX - GROUND JCT BLOCK & SOLDER WITH DDEC DATA LINK SHIELD SH1
12V POWER OUTLET
FRONT SECTION
FS
FRONT JUNCTION BOX COMPARTMENT
ROOF ACCES. CLEARANCE LTS C213(1), FAN DEFROST C365(1), DEST. SIGN. C364(1) C478(3), WARNING C362(1) C363(1) C373(1), WIPER MOT. C361(1) & DRIVER'S LTS
HEATING UPPER WINDSHIELD
FRONT ROOF SECTION
FRS
RR JCT. BOX - RELAYS
RR JCT. BOX - C535(1), R84, R85, C475(1) & SOLDER WT SHIELD SH2, SH3, 20, 20T
RR JCT. BOX - VIMN(87), VIMR(87), VIM4(30) & SOLDER WT SHIELD SH1
RR JCT BOX - RETARDER FAN CLUTCH C508(3)
RR JCT BOX - A/C & HEAT JCT PANEL
RR JCT BOX - DOCKING LTS RESISTORS
SIDE WINDOWS EMERGENCY EXIT LTS C36(2)
LH HAT RACK & GEN C204(2), FLUOR. C208(3)
AISLE LTS C83(1)
LH READ LTS C207(1), PASS & HOST CHIME SW
RH HAT RACK & GEN C204(2), FLUOR. C202(3)
RH READ LTS C206(1), PASS & HOST CHIME SW
LAV. OCC. LT C143(3), GAL. LT C328(1) FLUOR C41(1)
WCL RELAY R94 (85) & R98 (85)
RR END LAMPS RH C119 (A)
RR END LAMPS LH C120 (A)
ENG CPT C126(B), C128(2), C129(2), C130(2), C131(2), C422(1)
ENG CPT C230(2), C127(B), C122(B), C124(A)
ENG CPT C125(B)
RR ROOF CLEARANCE LTS C87(2)
& ENGINE CPT C287(A), C432(2) & C115(B)
RR ROOF CAMERA C87(1)
RR SIDE MARK C113, FLASH LH C114 & RH C121
LUG CPT RH SIDE MARKER C103, FLASHER C104
LUG CPT FUEL TANK C152(A), DAMPER C111(2), WATER VALVE C155(D), BYPASS VALVE C156(B), LH SIDE FLASHER C102, LH SIDE MARKER C103
REAR SECTION
RS
REAR JUNCTION BOX COMPARTMENT
BAT CPT - RELAYS R2, R3, R54, R55
ENGINE-SOLDER SHIELD SH1, SH2, SH3 & C326(B)
VOLTAGE REGULATOR
CONDENSER FAN SPEED RLY R39, R40, R41
CONDENSER FAN RELAY R41(87)
CONDENSER FAN LH
GALLEY INVERTER JUNCTION BLOCK
GALLEY COFFEMAKER
GALLEY R47 R48 R79, C403 LAMP, SW LT, HEAT CONT
WHEEL CHAIR LIFT RICON
BATTERY COMPARTMENT
BC
DDEC ACCES. BATTERY GROUND SEE PAGE 5.1
WORLD TRANS. ACCES. BAT. GRD SEE PAGE 6.1
RR JCT BOX
RBG
TELL TALE LIGHT MODULE SEE PAGE 28.1
CLUSTER SEE P.7.2
FR JCT BOX
FBG
CHASSIS GROUND
BATTERY GROUND

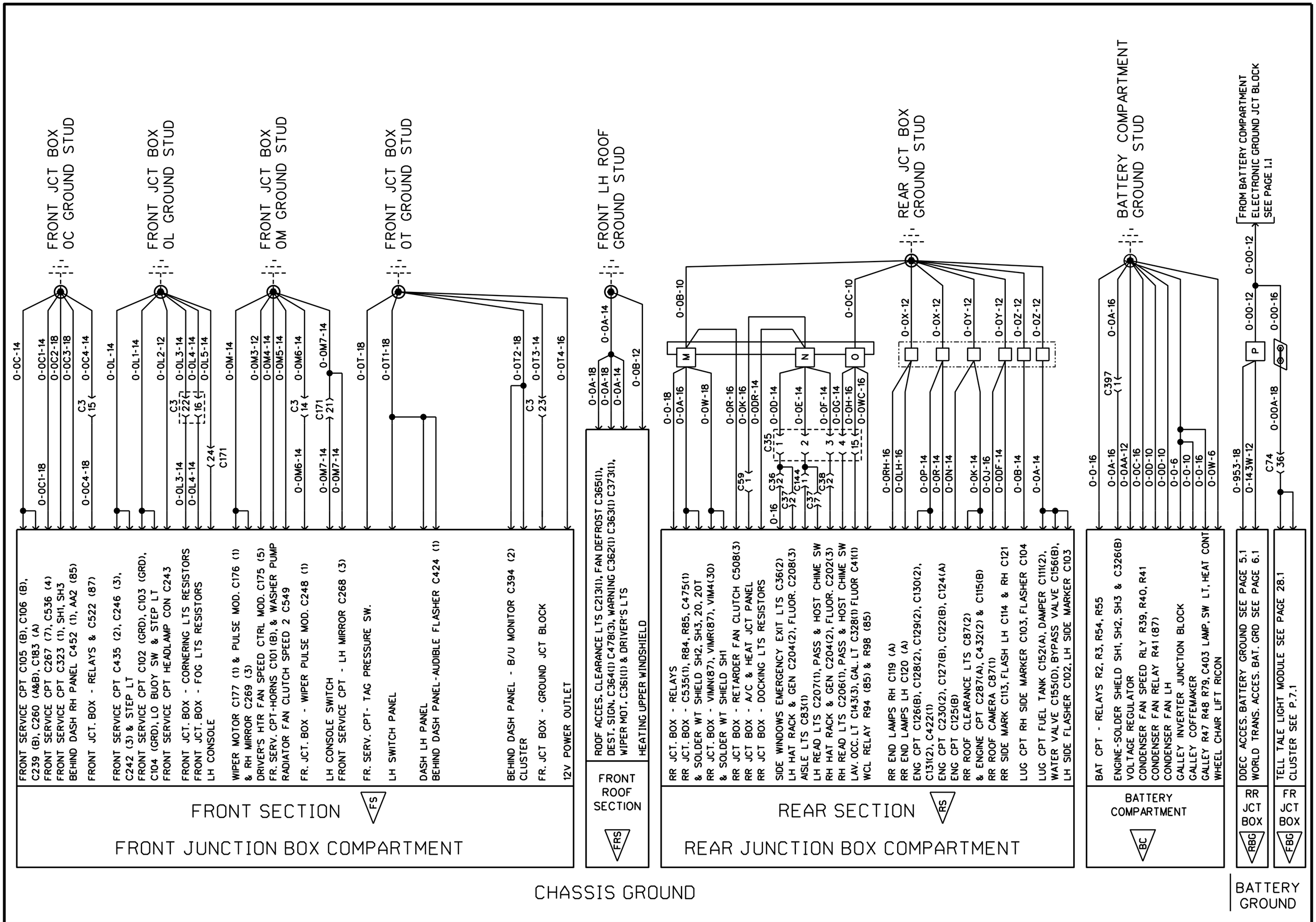
FRONT JCT BOX 0C GROUND STUD
FRONT JCT BOX 0L GROUND STUD
FRONT JCT BOX 0M GROUND STUD
FRONT JCT BOX 0T GROUND STUD
FRONT LH ROOF GROUND STUD
REAR JCT BOX GROUND STUD
BATTERY COMPARTMENT GROUND STUD
FROM BATTERY COMPARTMENT ELECTRONIC GROUND JCT BLOCK SEE PAGE 1.1
FRONT SERVICE CPT C105 (B), C106 (B), C239 (B), C260 (A&B), C183 (A)
FRONT SERVICE CPT C267 (7), C536 (4)
FRONT SERVICE CPT C323 (1), SH1, SH3
BEHIND DASH RH PANEL C452 (1), AA2 (85)
FRONT JCT. BOX - RELAYS & C522 (87)
FRONT SERVICE CPT C435 (2), C246 (3), C242 (3) & STEP LT
FRONT SERVICE CPT C102 (GRD), C103 (GRD), C104 (GRD), LO BUOY SW & STEP LT
FRONT SERVICE CPT HEADLAMP CON C243
FRONT JCT. BOX - CORNERING LTS RESISTORS
FRONT JCT. BOX - FOG LTS RESISTORS
LH CONSOLE
WIPER MOTOR C177 (1) & PULSE MOD. C176 (1) & RH MIRROR C269 (3)
DRIVER'S HTR FAN SPEED CTRL MOD. C175 (5)
FR. SERV. CPT-HORNS C101 (B), & WASHER PUMP
RADIATOR FAN CLUTCH SPEED 2 C549
FR. JCT. BOX - WIPER PULSE MOD. C248 (1)
LH CONSOLE SWITCH
FRONT SERVICE CPT - LH MIRROR C268 (3)
FR. SERV. CPT- TAG PRESSURE SW.
LH SWITCH PANEL
DASH LH PANEL
BEHIND DASH PANEL-AUDIBLE FLASHER C424 (1)
BEHIND DASH PANEL - B/U MONITOR C394 (2)
CLUSTER
FR. JCT BOX - GROUND JCT BLOCK
12V POWER OUTLET
FRONT SECTION
FS
FRONT JUNCTION BOX COMPARTMENT
ROOF ACCES. CLEARANCE LTS C213(1), FAN DEFROST C365(1), DEST. SIGN. C364(1) C478(3), WARNING C362(1) C363(1) C373(1), WIPER MOT. C361(1) & DRIVER'S LTS
HEATING UPPER WINDSHIELD
FRONT ROOF SECTION
FRS
RR JCT. BOX - RELAYS
RR JCT. BOX - C535(1), R84, R85, C475(1) & SOLDER WT SHIELD SH2, SH3, 20, 20T
RR JCT. BOX - VIMN(87), VIMR(87), VIM4(30) & SOLDER WT SHIELD SH1
RR JCT BOX - RETARDER FAN CLUTCH C508(3)
RR JCT BOX - A/C & HEAT JCT PANEL
RR JCT BOX - DOCKING LTS RESISTORS
SIDE WINDOWS EMERGENCY EXIT LTS C36(2)
LH HAT RACK & GEN C204(2), FLUOR. C208(3)
AISLE LTS C83(1)
LH READ LTS C207(1), PASS & HOST CHIME SW
RH HAT RACK & GEN C204(2), FLUOR. C202(3)
RH READ LTS C206(1), PASS & HOST CHIME SW
LAV. OCC. LT C143(3), GAL. LT C328(1) FLUOR C41(1)
WCL RELAY R94 (85) & R98 (85)
RR END LAMPS RH C119 (A)
RR END LAMPS LH C120 (A)
ENG CPT C126(B), C128(2), C129(2), C130(2), C131(2), C422(1)
ENG CPT C230(2), C127(B), C122(B), C124(A)
ENG CPT C125(B)
RR ROOF CLEARANCE LTS C87(2)
& ENGINE CPT C287(A), C432(2) & C115(B)
RR ROOF CAMERA C87(1)
RR SIDE MARK C113, FLASH LH C114 & RH C121
LUG CPT RH SIDE MARKER C103, FLASHER C104
LUG CPT FUEL TANK C152(A), DAMPER C111(2), WATER VALVE C155(D), BYPASS VALVE C156(B), LH SIDE FLASHER C102, LH SIDE MARKER C103
REAR SECTION
RS
REAR JUNCTION BOX COMPARTMENT
BAT CPT - RELAYS R2, R3, R54, R55
ENGINE-SOLDER SHIELD SH1, SH2, SH3 & C326(B)
VOLTAGE REGULATOR
CONDENSER FAN SPEED RLY R39, R40, R41
CONDENSER FAN RELAY R41(87)
CONDENSER FAN LH
GALLEY INVERTER JUNCTION BLOCK
GALLEY COFFEMAKER
GALLEY R47 R48 R79, C403 LAMP, SW LT, HEAT CONT
WHEEL CHAIR LIFT RICON
BATTERY COMPARTMENT
BC
DDEC ACCES. BATTERY GROUND SEE PAGE 5.1
WORLD TRANS. ACCES. BAT. GRD SEE PAGE 6.1
RR JCT BOX
RBG
TELL TALE LIGHT MODULE SEE PAGE 28.1
CLUSTER SEE P.7.1
FR JCT BOX
FBG
CHASSIS GROUND
BATTERY GROUND

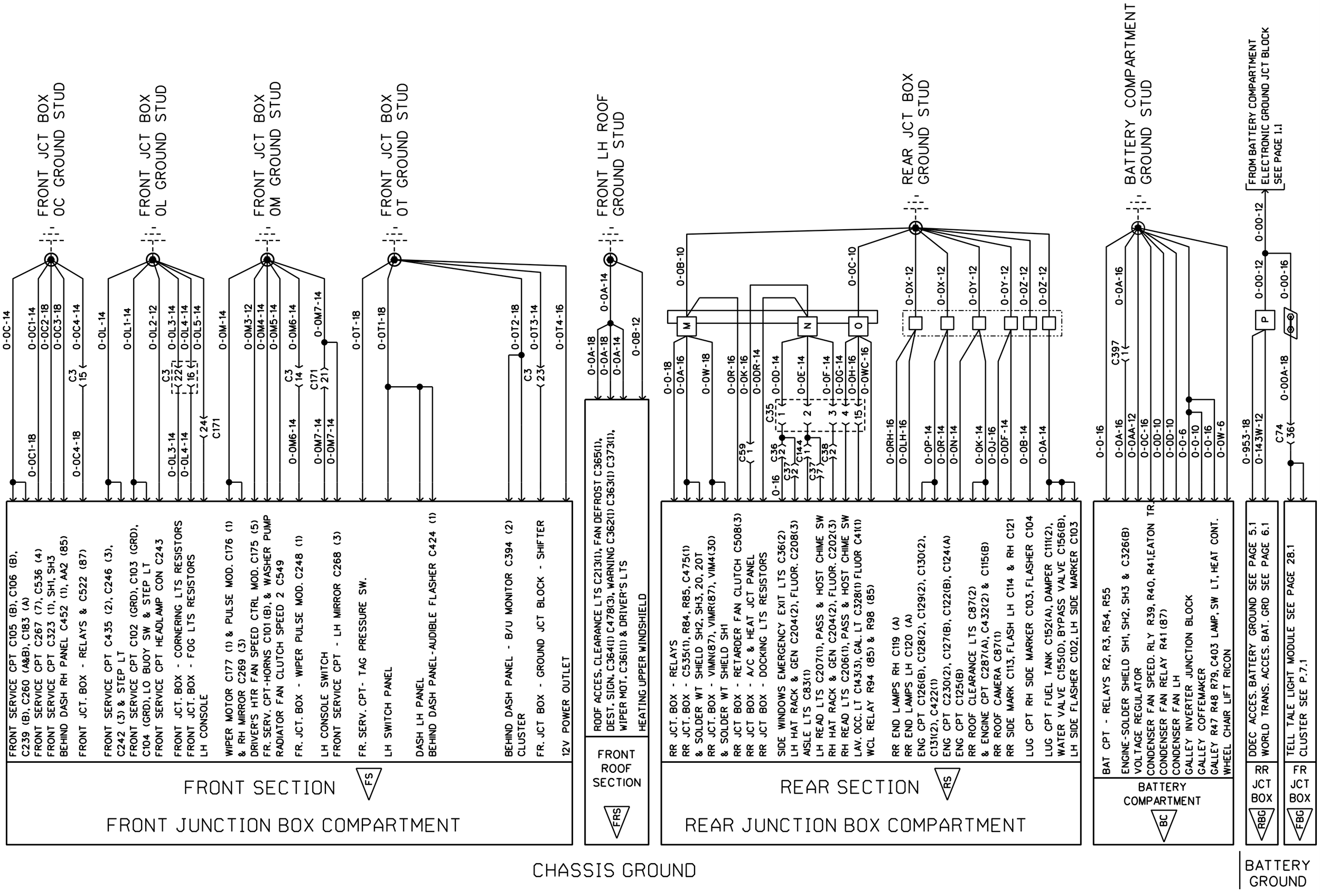
FRONT JCT BOX 0C GROUND STUD
FRONT JCT BOX 0L GROUND STUD
FRONT JCT BOX 0M GROUND STUD
FRONT JCT BOX 0T GROUND STUD
FRONT LH ROOF GROUND STUD
REAR JCT BOX GROUND STUD
BATTERY COMPARTMENT GROUND STUD
FROM BATTERY COMPARTMENT ELECTRONIC GROUND JCT BLOCK SEE PAGE 1.1
FRONT SERVICE CPT C105 (B), C106 (B), C239 (B), C260 (A&B), C183 (A)
FRONT SERVICE CPT C267 (7), C536 (4)
FRONT SERVICE CPT C323 (1), SH1, SH3
BEHIND DASH RH PANEL C452 (1), AA2 (85)
FRONT JCT. BOX - RELAYS & C522 (87)
FRONT SERVICE CPT C435 (2), C246 (3), C242 (3) & STEP LT
FRONT SERVICE CPT C102 (GRD), C103 (GRD), C104 (GRD), LO BUOY SW & STEP LT
FRONT SERVICE CPT HEADLAMP CON C243
FRONT JCT. BOX - CORNERING LTS RESISTORS
FRONT JCT. BOX - FOG LTS RESISTORS
LH CONSOLE
WIPER MOTOR C177 (1) & PULSE MOD. C176 (1) & RH MIRROR C269 (3)
DRIVER'S HTR FAN SPEED CTRL MOD. C175 (5)
FR. SERV. CPT-HORNS C101 (B), & WASHER PUMP
RADIATOR FAN CLUTCH SPEED 2 C549
FR. JCT. BOX - WIPER PULSE MOD. C248 (1)
LH CONSOLE SWITCH
FRONT SERVICE CPT - LH MIRROR C268 (3)
FR. SERV. CPT- TAG PRESSURE SW.
LH SWITCH PANEL
DASH LH PANEL
BEHIND DASH PANEL-AUDIBLE FLASHER C424 (1)
BEHIND DASH PANEL - B/U MONITOR C394 (2)
CLUSTER
FR. JCT BOX - GROUND JCT BLOCK - SHIFTER
12V POWER OUTLET
FRONT SECTION
FS
FRONT JUNCTION BOX COMPARTMENT
ROOF ACCES. CLEARANCE LTS C213(1), FAN DEFROST C365(1), DEST. SIGN. C364(1) C478(3), WARNING C362(1) C363(1) C373(1), WIPER MOT. C361(1) & DRIVER'S LTS
HEATING UPPER WINDSHIELD
FRONT ROOF SECTION
FRS
RR JCT. BOX - RELAYS
RR JCT. BOX - C535(1), R84, R85, C475(1) & SOLDER WT SHIELD SH2, SH3, 20T
RR JCT. BOX - VIMN(87), VIMR(87), VIM4(30) & SOLDER WT SHIELD SH1
RR JCT BOX - RETARDER FAN CLUTCH C508(3)
RR JCT BOX - A/C & HEAT JCT PANEL
RR JCT BOX - DOCKING LTS RESISTORS
SIDE WINDOWS EMERGENCY EXIT LTS C36(2)
LH HAT RACK & GEN C204(2), FLUOR. C208(3)
AISLE LTS C83(1)
LH READ LTS C207(1), PASS & HOST CHIME SW
RH HAT RACK & GEN C204(2), FLUOR. C202(3)
RH READ LTS C206(1), PASS & HOST CHIME SW
LAV. OCC. LT C143(3), GAL. LT C328(1) FLUOR C41(1)
WCL RELAY R94 (85) & R98 (85)
RR END LAMPS RH C119 (A)
RR END LAMPS LH C120 (A)
ENG CPT C126(B), C128(2), C129(2), C130(2), C131(2), C422(1)
ENG CPT C230(2), C127(B), C122(B), C124(A)
ENG CPT C125(B)
RR ROOF CLEARANCE LTS C87(2)
& ENGINE CPT C287(A), C432(2) & C115(B)
RR ROOF CAMERA C87(1)
RR SIDE MARK C113, FLASH LH C114 & RH C121
LUG CPT RH SIDE MARKER C103, FLASHER C104
LUG CPT FUEL TANK C152(A), DAMPER C111(2), WATER VALVE C155(D), BYPASS VALVE C156(B), LH SIDE FLASHER C102, LH SIDE MARKER C103
REAR SECTION
RS
REAR JUNCTION BOX COMPARTMENT
BAT CPT - RELAYS R2, R3, R54, R55
ENGINE-SOLDER SHIELD SH1, SH2, SH3 & C326(B)
VOLTAGE REGULATOR
CONDENSER FAN SPEED. RLY R39, R40, R41, EATON TR.
CONDENSER FAN RELAY R41 (87)
CONDENSER FAN LH
GALLEY INVERTER JUNCTION BLOCK
GALLEY COFFEMAKER
GALLEY R47 R48 R79, C403 LAMP, SW LT, HEAT CONT.
WHEEL CHAIR LIFT RICON
BATTERY COMPARTMENT
BC
DDEC ACCES. BATTERY GROUND SEE PAGE 5.1
WORLD TRANS. ACCES. BAT. GRD SEE PAGE 6.1
RR JCT BOX
RBG
TELL TALE LIGHT MODULE SEE PAGE 28.1
CLUSTER SEE P.7.1
FR JCT BOX
FBG
CHASSIS GROUND
BATTERY GROUND

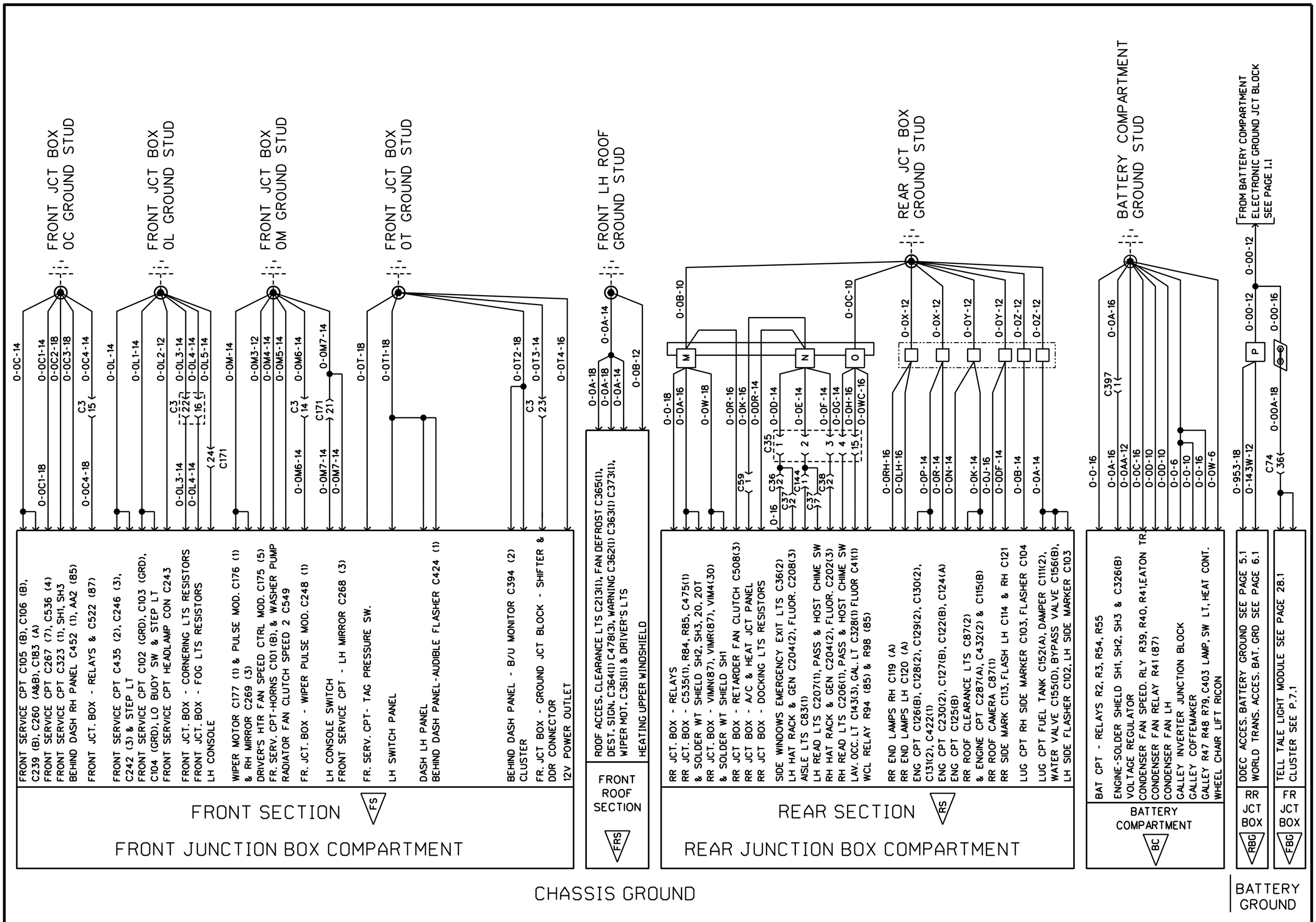
FRONT JCT BOX 0C GROUND STUD
FRONT JCT BOX 0L GROUND STUD
FRONT JCT BOX 0M GROUND STUD
FRONT JCT BOX 0T GROUND STUD
FRONT LH ROOF GROUND STUD
REAR JCT BOX GROUND STUD
BATTERY COMPARTMENT GROUND STUD
FROM BATTERY COMPARTMENT ELECTRONIC GROUND JCT BLOCK SEE PAGE 1.1
FRONT SERVICE CPT C105 (B), C106 (B), C239 (B), C260 (A&B), C183 (A)
FRONT SERVICE CPT C267 (7), C536 (4)
FRONT SERVICE CPT C323 (1), SH1, SH3
BEHIND DASH RH PANEL C452 (1), AA2 (85)
FRONT JCT. BOX - RELAYS & C522 (87)
FRONT SERVICE CPT C435 (2), C246 (3), C242 (3) & STEP LT
FRONT SERVICE CPT C102 (GRD), C103 (GRD), C104 (GRD), LO BUOY SW & STEP LT
FRONT SERVICE CPT HEADLAMP CON C243
FRONT JCT. BOX - CORNERING LTS RESISTORS
FRONT JCT. BOX - FOG LTS RESISTORS
LH CONSOLE
WIPER MOTOR C177 (1) & PULSE MOD. C176 (1) & RH MIRROR C269 (3)
DRIVER'S HTR FAN SPEED CTRL MOD. C175 (5)
FR. SERV. CPT-HORNS C101 (B), & WASHER PUMP
RADIATOR FAN CLUTCH SPEED 2 C549
FR. JCT. BOX - WIPER PULSE MOD. C248 (1)
LH CONSOLE SWITCH
FRONT SERVICE CPT - LH MIRROR C268 (3)
FR. SERV. CPT- TAG PRESSURE SW.
LH SWITCH PANEL
DASH LH PANEL
BEHIND DASH PANEL-AUDIBLE FLASHER C424 (1)
BEHIND DASH PANEL - B/U MONITOR C394 (2)
CLUSTER
FR. JCT BOX - GROUND JCT BLOCK - SHIFTER & DDR CONNECTOR
12V POWER OUTLET
FRONT SECTION
FS
FRONT JUNCTION BOX COMPARTMENT
ROOF ACCES. CLEARANCE LTS C213(1), FAN DEFROST C365(1), DEST. SIGN. C364(1) C478(3), WARNING C362(1) C363(1) C373(1), WIPER MOT. C361(1) & DRIVER'S LTS
HEATING UPPER WINDSHIELD
FRONT ROOF SECTION
FRS
RR JCT. BOX - RELAYS
RR JCT. BOX - C535(1), R84, R85, C475(1) & SOLDER WT SHIELD SH2, SH3, 20, 20T
RR JCT. BOX - VIMN(87), VIMR(87), VIM4(30) & SOLDER WT SHIELD SH1
RR JCT BOX - RETARDER FAN CLUTCH C508(3)
RR JCT BOX - A/C & HEAT JCT PANEL
RR JCT BOX - DOCKING LTS RESISTORS
SIDE WINDOWS EMERGENCY EXIT LTS C36(2)
LH HAT RACK & GEN C204(2), FLUOR. C208(3)
AISLE LTS C83(1)
LH READ LTS C207(1), PASS & HOST CHIME SW
RH HAT RACK & GEN C204(2), FLUOR. C202(3)
RH READ LTS C206(1), PASS & HOST CHIME SW
LAV. OCC. LT C143(3), GAL. LT C328(1) FLUOR C41(1)
WCL RELAY R94 (85) & R98 (85)
RR END LAMPS RH C119 (A)
RR END LAMPS LH C120 (A)
ENG CPT C126(B), C128(2), C129(2), C130(2), C131(2), C422(1)
ENG CPT C230(2), C127(B), C122(B), C124(A)
ENG CPT C125(B)
RR ROOF CLEARANCE LTS C87(2)
& ENGINE CPT C287(A), C432(2) & C115(B)
RR ROOF CAMERA C87(1)
RR SIDE MARK C113, FLASH LH C114 & RH C121
LUG CPT RH SIDE MARKER C103, FLASHER C104
LUG CPT FUEL TANK C152(A), DAMPER C111(2), WATER VALVE C155(D), BYPASS VALVE C156(B), LH SIDE FLASHER C102, LH SIDE MARKER C103
REAR SECTION
RS
REAR JUNCTION BOX COMPARTMENT
BAT CPT - RELAYS R2, R3, R54, R55
ENGINE-SOLDER SHIELD SH1, SH2, SH3 & C326(B)
VOLTAGE REGULATOR
CONDENSER FAN SPEED. RLY R39, R40, R41,EATON TR
CONDENSER FAN RELAY R41(87)
CONDENSER FAN LH
GALLEY INVERTER JUNCTION BLOCK
GALLEY COFFEMAKER
GALLEY R47 R48 R79, C403 LAMP, SW LT, HEAT CONT.
WHEEL CHAIR LIFT RICON
BATTERY COMPARTMENT
BC
DDEC ACCES. BATTERY GROUND SEE PAGE 5.1
WORLD TRANS. ACCES. BAT. GRD SEE PAGE 6.1
RR JCT BOX
RBG
TELL TALE LIGHT MODULE SEE PAGE 28.1
CLUSTER SEE P.7.1
FR JCT BOX
FBG
CHASSIS GROUND
BATTERY GROUND

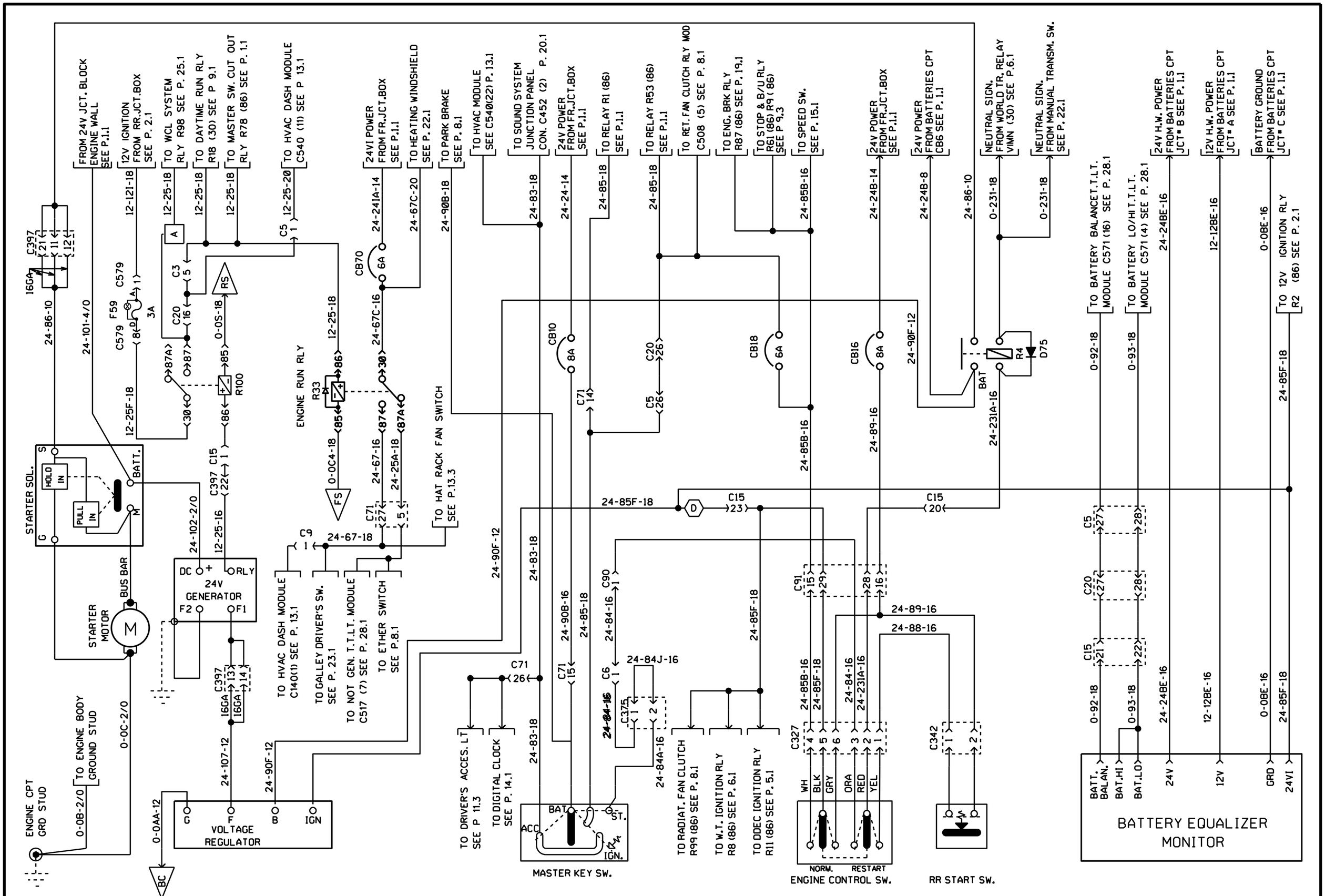

CHARGING SYSTEM & ENGINE CONTROL

PREVOST	WIRING DIAGRAM	NO: D060902	PAGE: 4.1	REVISION 00

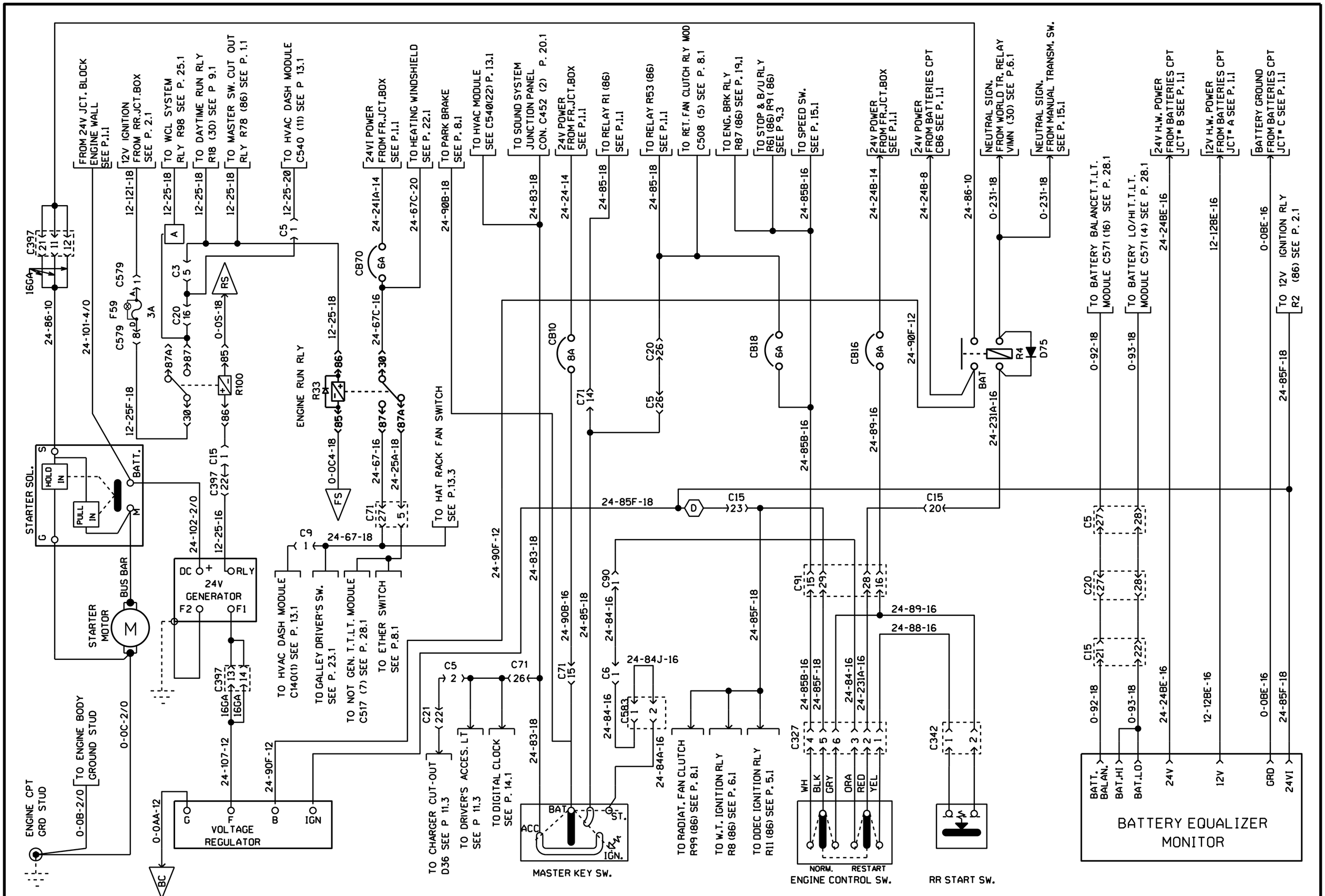

CHARGING SYSTEM & ENGINE CONTROL

PREVOST	WIRING DIAGRAM	NO: D060902	PAGE: 4.1	REVISION 01

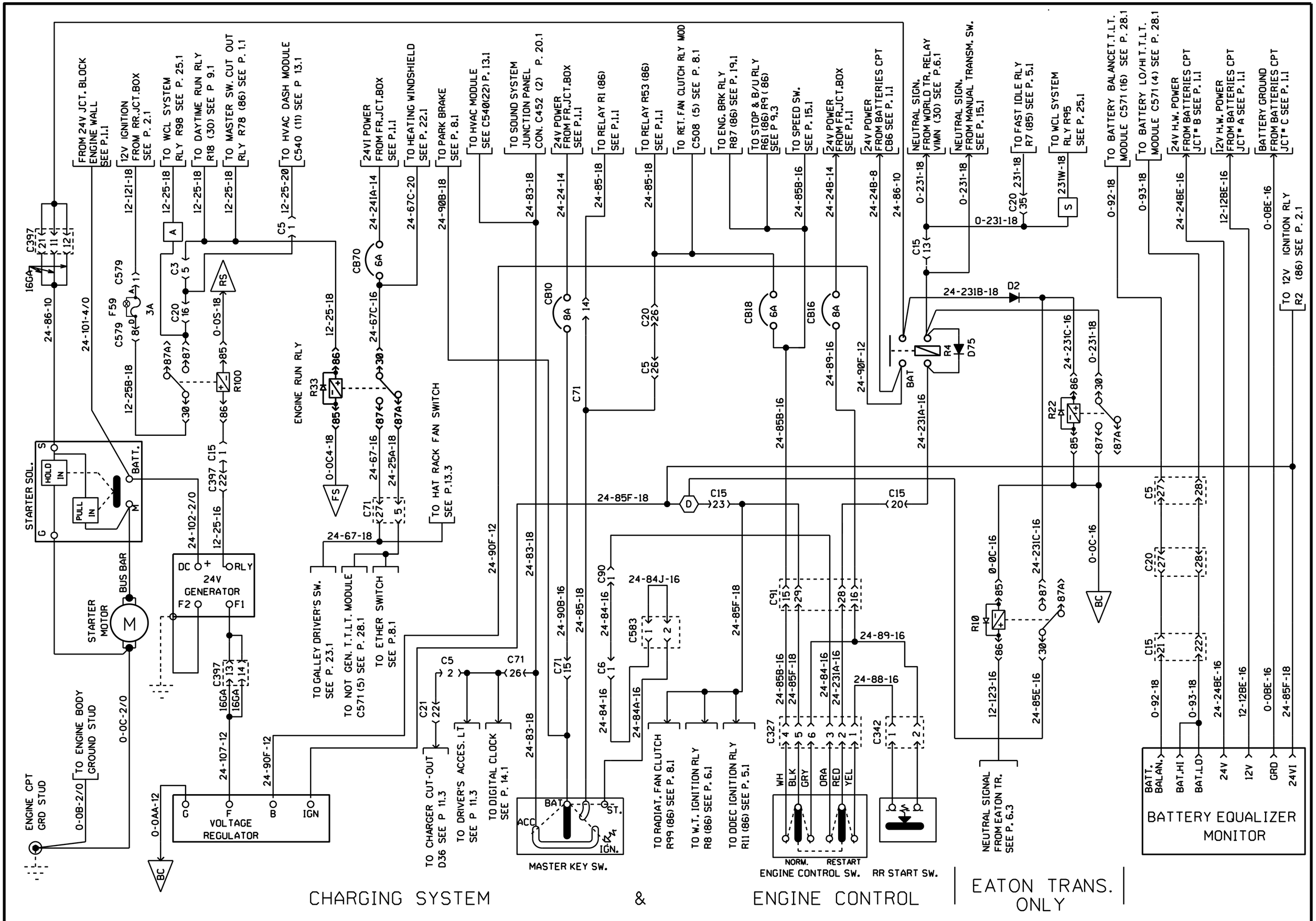
FROM 24V JCT. BLOCK ENGINE WALL SEE P.1.1
12V IGNITION FROM RR.JCT.BOX SEE P. 2.1
TO WCL SYSTEM RLY R98 SEE P. 25.1
TO DAYTIME RUN RLY R18 (30) SEE P 9.1
TO MASTER SW. CUT OUT RLY R78 (86) SEE P. 1.1
TO HVAC DASH MODULE C540 (11) SEE P 13.1
24VI POWER FROM FR.JCT.BOX SEE P.1.1
TO HEATING WINDSHIELD SEE P. 22.1
TO PARK BRAKE SEE P. 8.1
TO HVAC MODULE SEE C540(22) P. 13.1
TO SOUND SYSTEM JUNCTION PANEL CON. C452 (2) P. 20.1
24V POWER FROM FR.JCT.BOX SEE P.1.1
TO RELAY R1 (86) SEE P.1.1
TO RELAY R53 (86) SEE P.1.1
TO RET. FAN CLUTCH RLY MOD C508 (5) SEE P. 8.1
TO ENG. BRK RLY R87 (86) SEE P. 19.1
TO STOP & B/U RLY R61 (86) R9 (86) SEE P 9.3
TO SPEED SW. SEE P. 15.1
24V POWER FROM FR.JCT.BOX SEE P.1.1
24V POWER FROM BATTERIES CPT CB6 SEE P. 1.1
NEUTRAL SIGN. FROM WORLD TR. RELAY VIMN (30) SEE P.6.1
NEUTRAL SIGN. FROM MANUAL TRANSM. SW. SEE P. 15.1
TO FAST IDLE RLY R7 (85) SEE P. 5.1
TO WCL SYSTEM RLY R95 SEE P. 25.1
TO BATTERY BALANCE T.T.L.T. MODULE C571 (16) SEE P. 28.1
TO BATTERY LO/HI T.T.L.T. MODULE C571 (4) SEE P. 28.1
24V H.W. POWER FROM BATTERIES CPT JCT# B SEE P. 1.1
12V H.W. POWER FROM BATTERIES CPT JCT# A SEE P. 1.1
BATTERY GROUND FROM BATTERIES CPT JCT# C SEE P. 1.1
TO 12V IGNITION RLY R2 (86) SEE P. 2.1
STARTER SOL.
HOLD IN
PULL IN
BATT.
STARTER MOTOR
BUS BAR
24V GENERATOR
DC
RLY
F2
F1
ENGINE RUN RLY
TO HAT RACK FAN SWITCH SEE P.13.3
TO GALLEY DRIVER'S SW. SEE P. 23.1
TO NOT GEN. T.T.L.T. MODULE C571 (5) SEE P. 28.1
TO ETHER SWITCH SEE P.8.1
TO ENGINE BODY GROUND STUD
ENGINE CPT GRD STUD
VOLTAGE REGULATOR
G
F
B
IGN
TO CHARGER CUT-OUT D36 SEE P 11.3
TO DRIVER'S ACCES. LT SEE P 11.3
TO DIGITAL CLOCK SEE P. 14.1
MASTER KEY SW.
ACC
BAT
ST.
IGN.
TO RADIAT. FAN CLUTCH R99 (86) SEE P. 8.1
TO W.T. IGNITION RLY R8 (86) SEE P. 6.1
TO DDEC IGNITION RLY R11 (86) SEE P. 5.1
WH
BLK
GRY
ORA
RED
YEL
NORM.
RESTART
ENGINE CONTROL SW.
RR START SW.
NEUTRAL SIGNAL FROM EATON TR. SEE P. 6.3
BATTERY EQUALIZER MONITOR
BATT. BALAN.
BAT.HI
BAT.LO
24V
12V
GRD
24VI
CHARGING SYSTEM
&
ENGINE CONTROL
EATON TRANS. ONLY

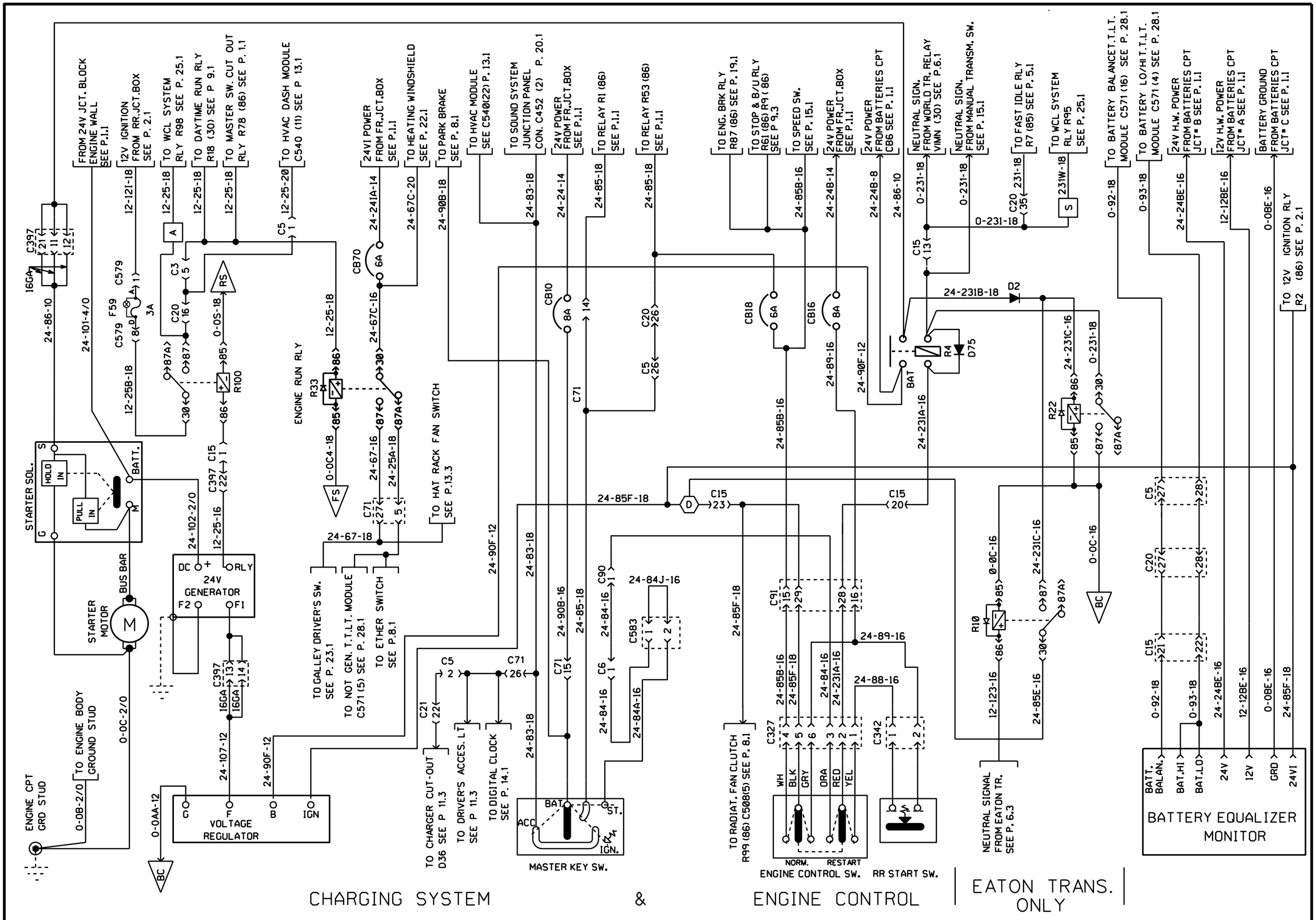

PREVOST	WIRING DIAGRAM	NO: D060902	PAGE: 4.1	REVISION 09

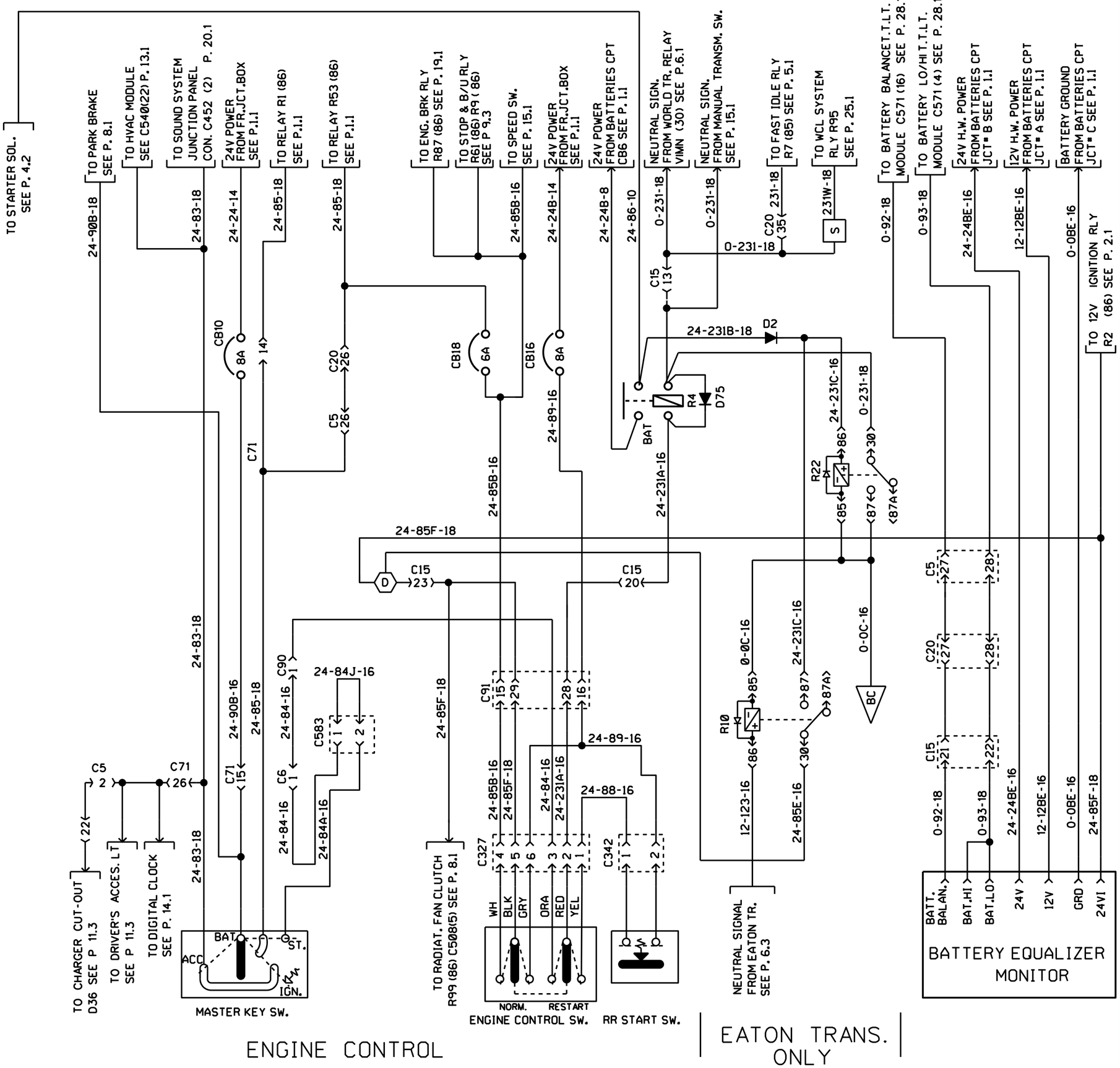

PREVOST	WIRING DIAGRAM	NO: D060902	PAGE: 4.1	REVISION 16

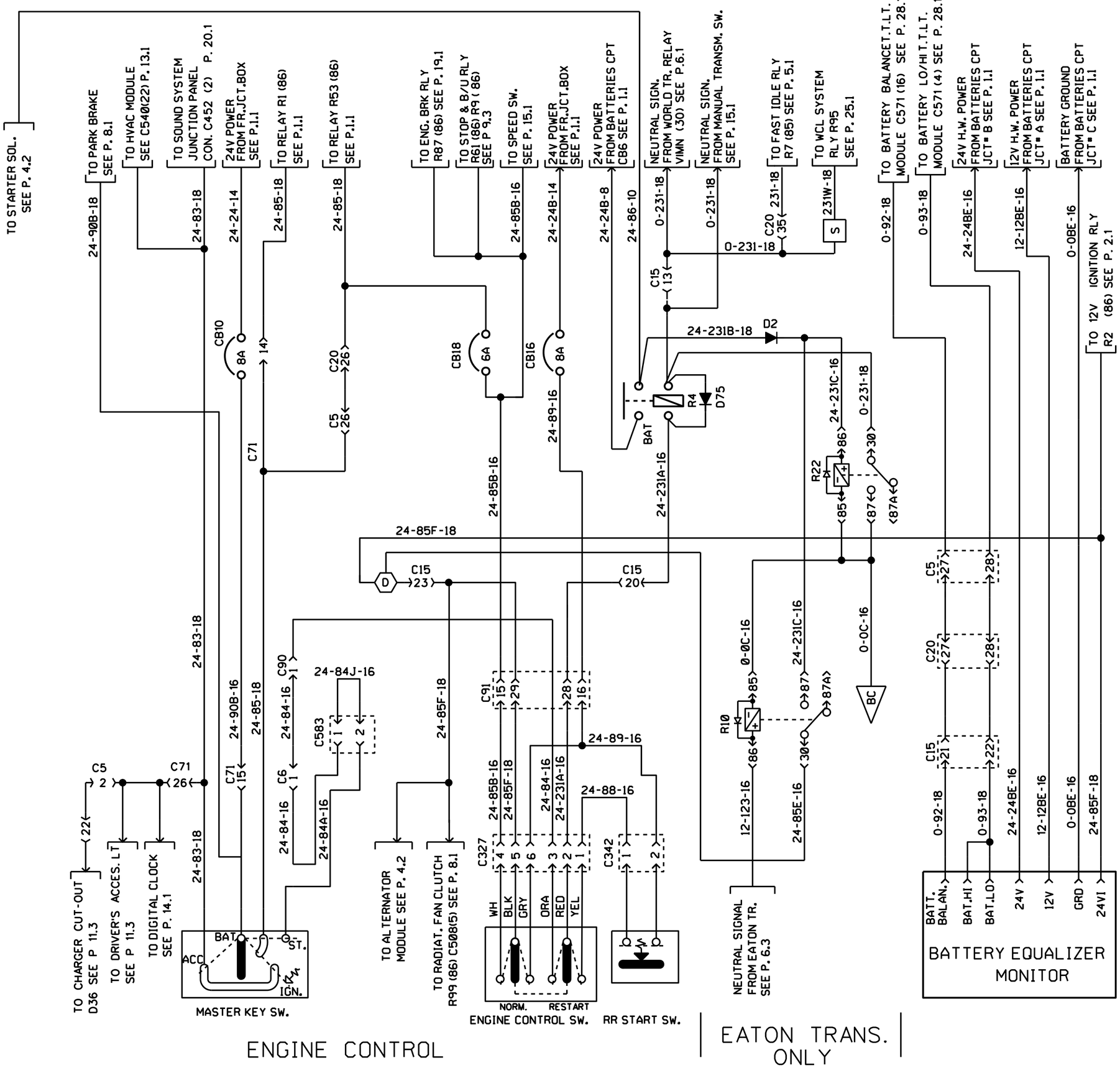

PREVOST	WIRING DIAGRAM	NO: D060902	PAGE: 4.1	REVISION 19

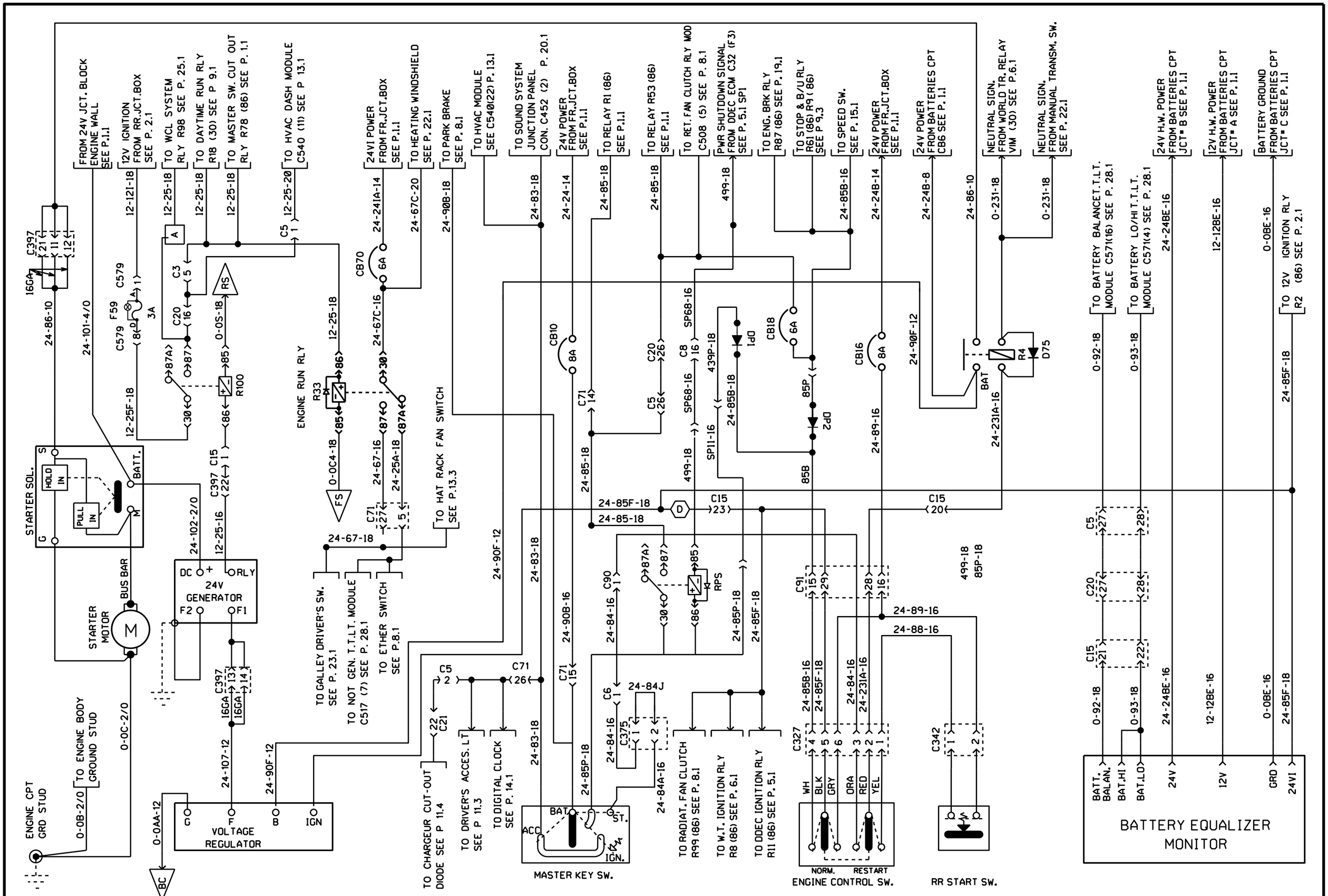

SPECIAL CHARGING SYSTEM & ENGINE CONTROL WITH POWER SHUTDOWN & IDLER TIMER

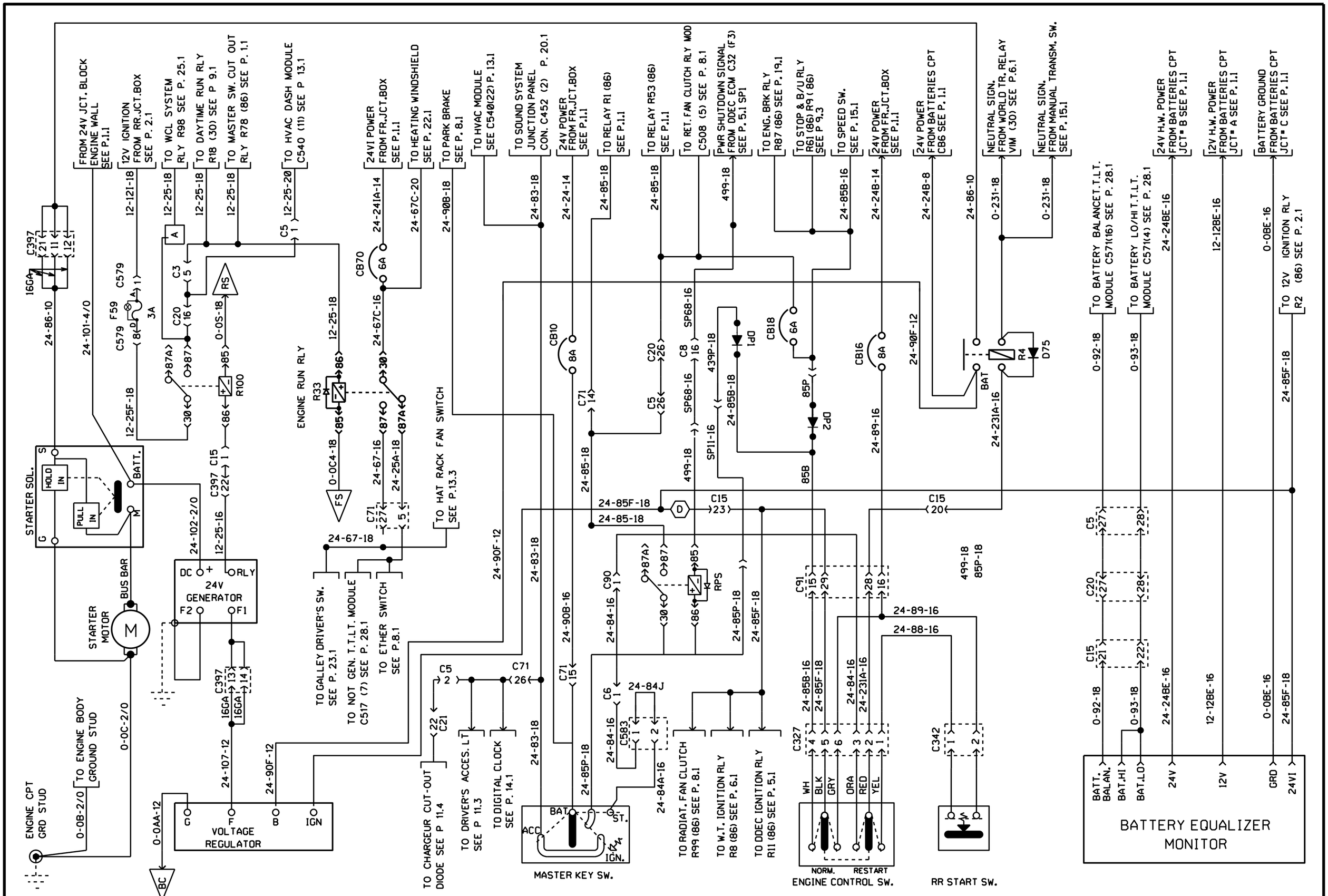

SPECIAL CHARGING SYSTEM & ENGINE CONTROL WITH POWER SHUTDOWN & IDLER TIMER

PREVOST	WIRING DIAGRAM	NO: D060902	PAGE: 4.1 sp1	REVISION 01

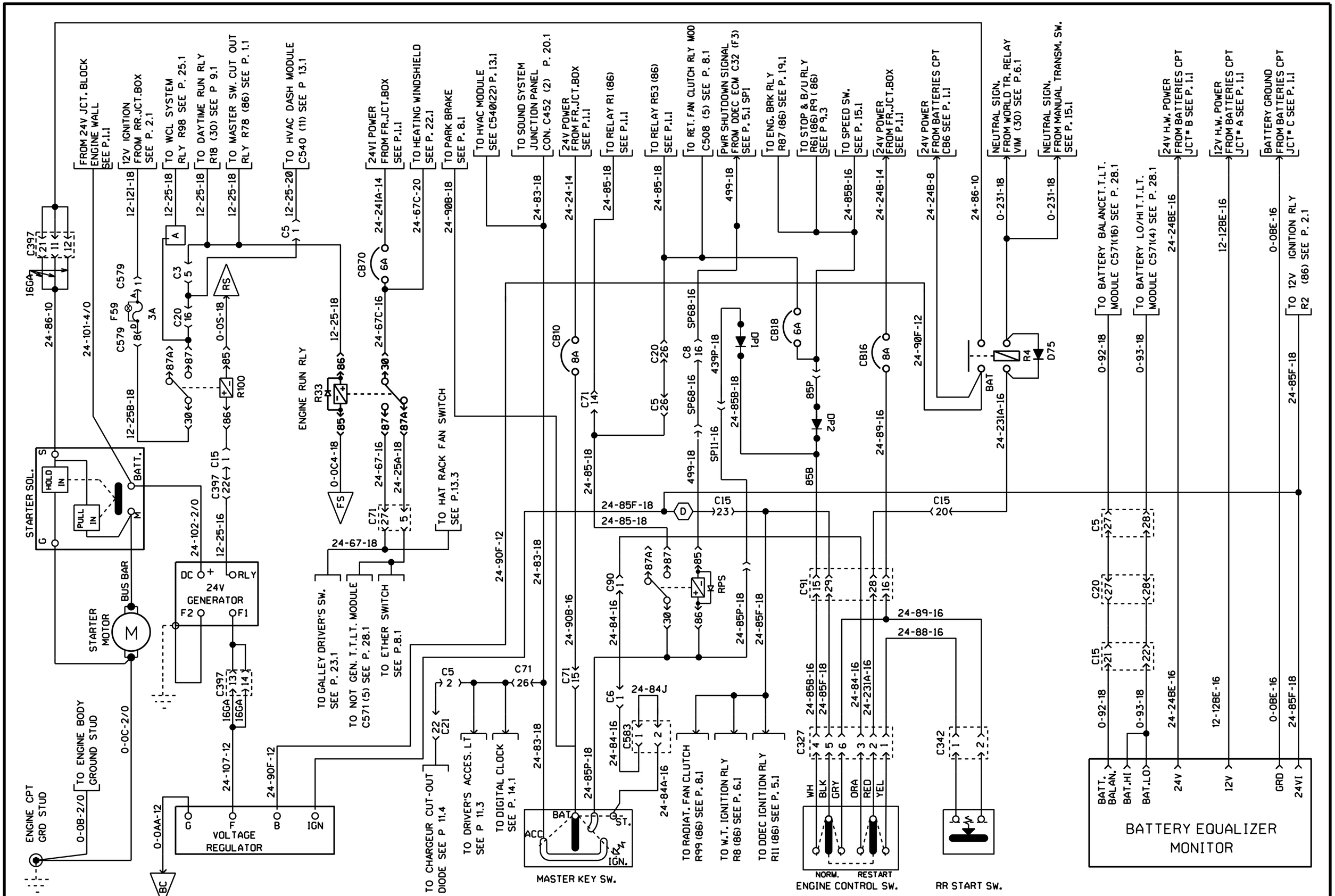

SPECIAL CHARGING SYSTEM & ENGINE CONTROL WITH POWER SHUTDOWN & IDLER TIMER

PREVOST	WIRING DIAGRAM	NO: D060902	PAGE: 4.1 sp1	REVISION 08

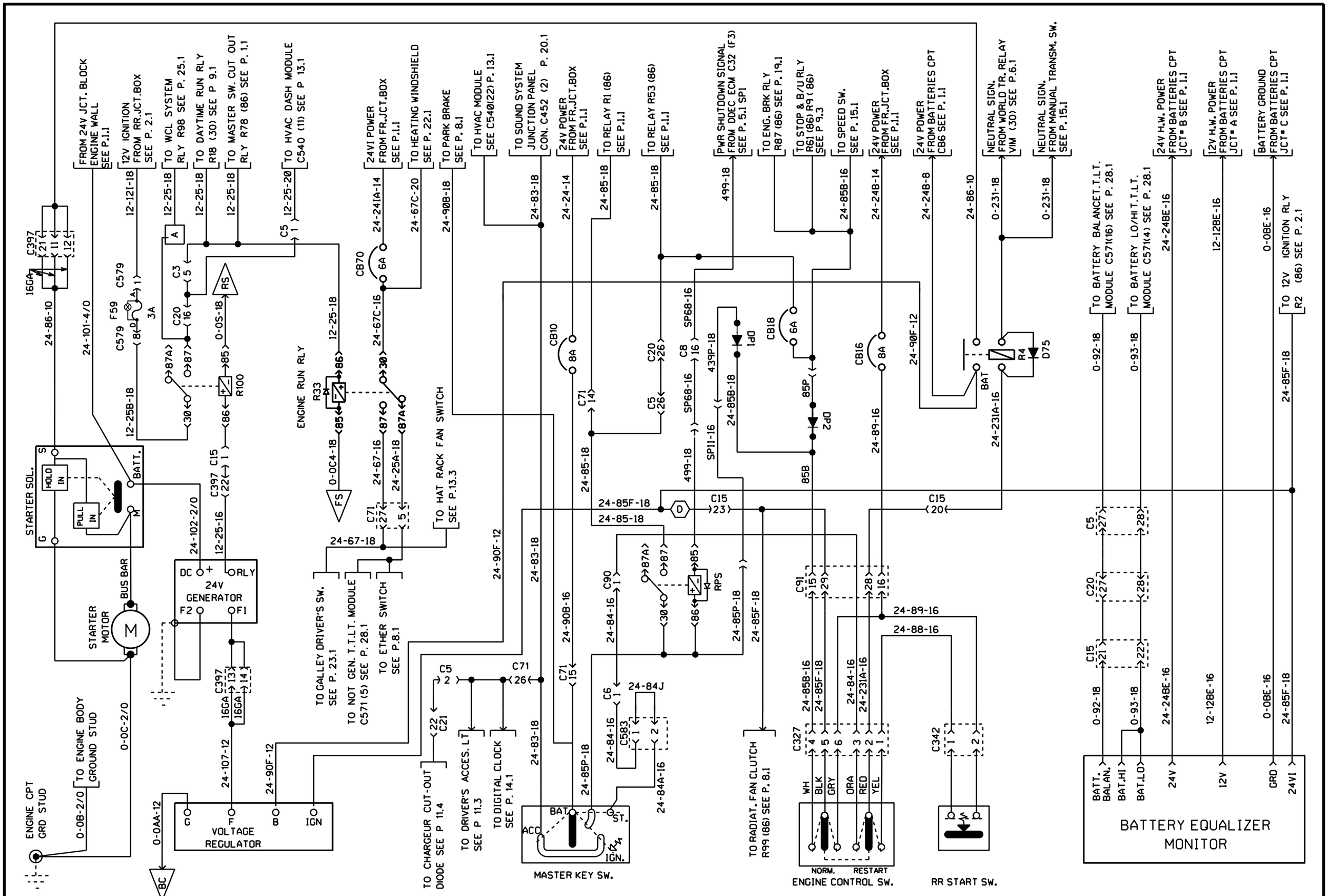

SPECIAL CHARGING SYSTEM & ENGINE CONTROL WITH POWER SHUTDOWN & IDLER TIMER

PREVOST	WIRING DIAGRAM	NO: D060902	PAGE: 4.1 sp1	REVISION 09

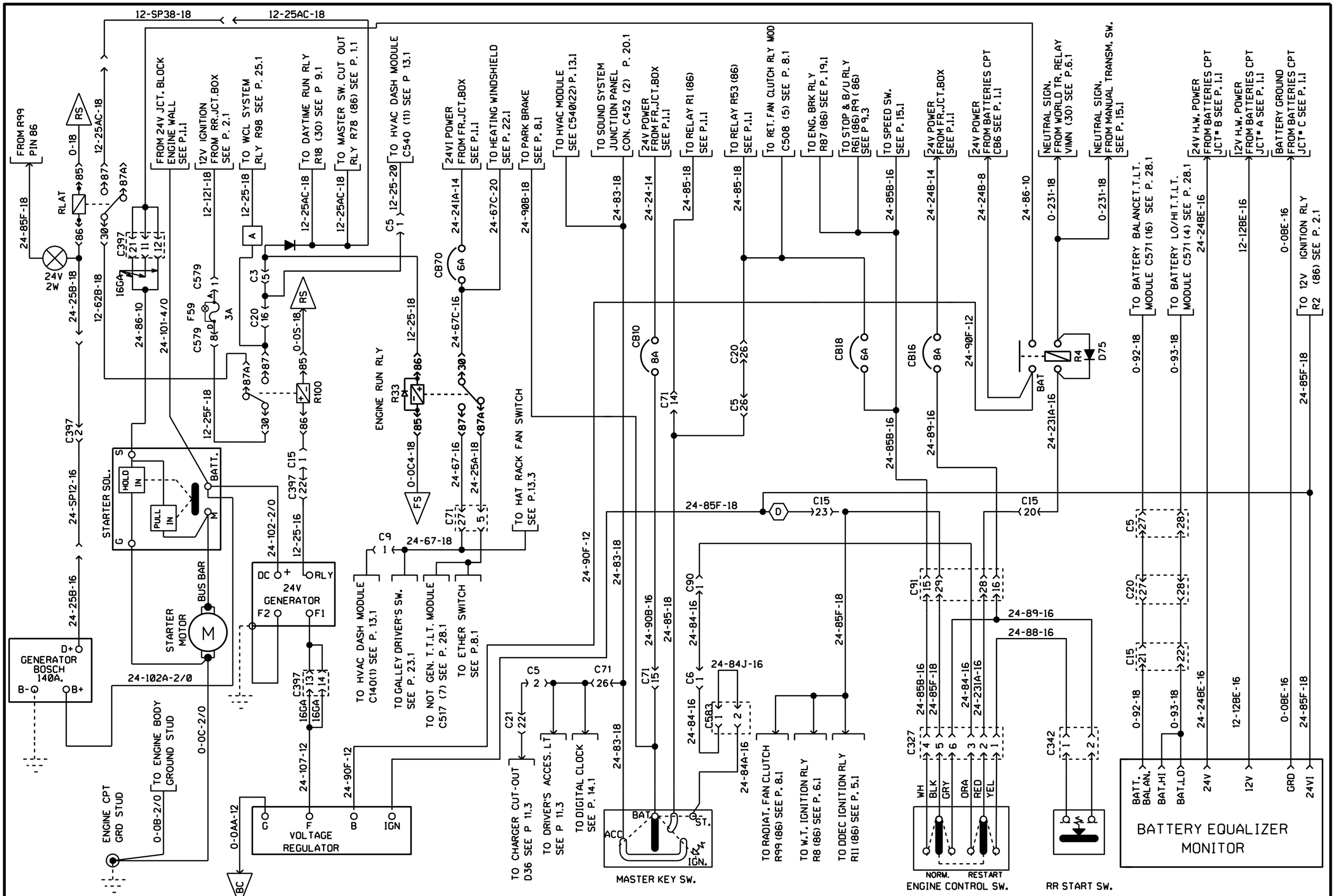

GENERATOR ADDITIONAL

CHARGING SYSTEM & ENGINE CONTROL

PREVOST	WIRING DIAGRAM	NO: D060902	PAGE: 4.1sp2	REVISION 00

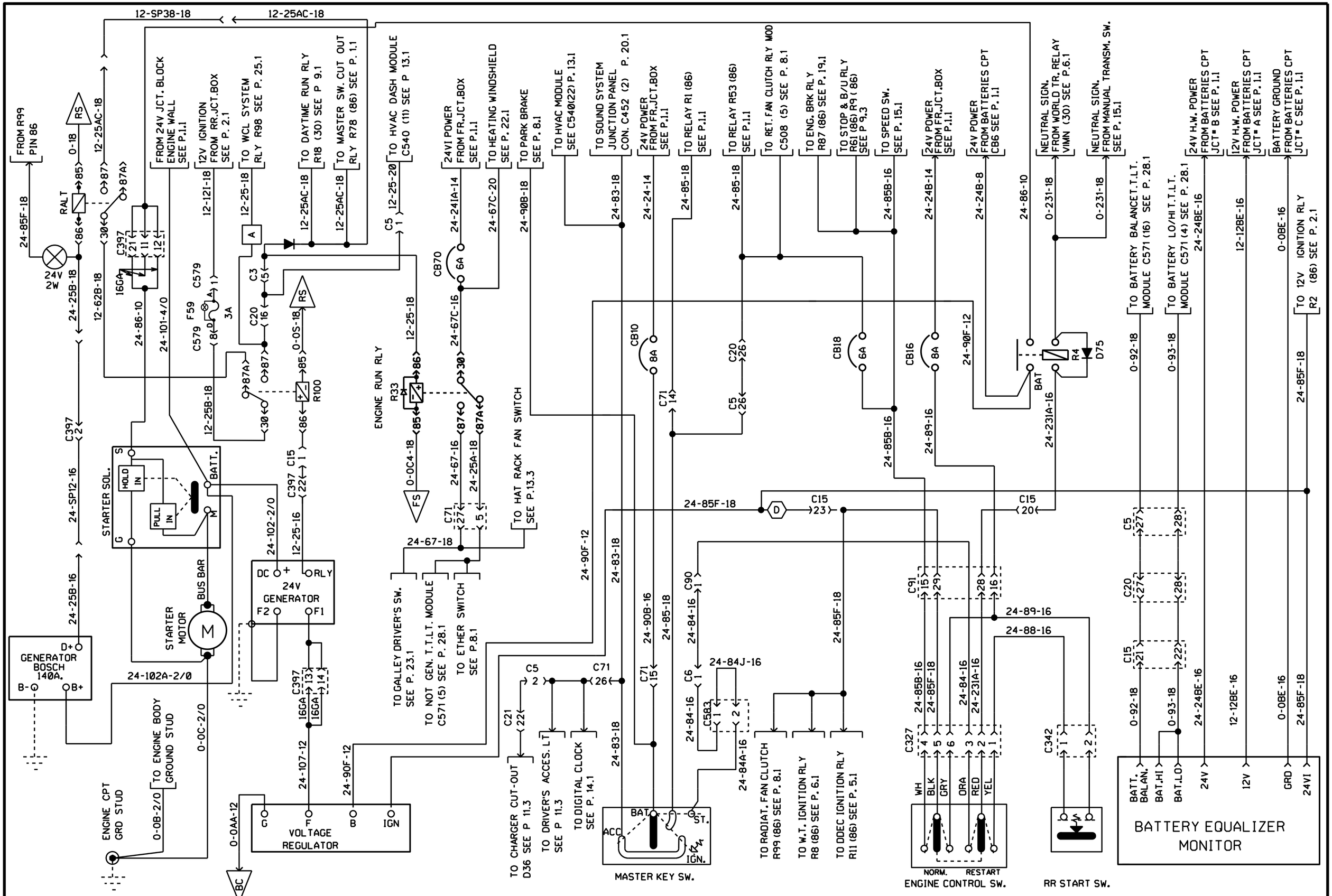

PREVOST	WIRING DIAGRAM	NO: D060902	PAGE: 4.1sp2	REVISION 08

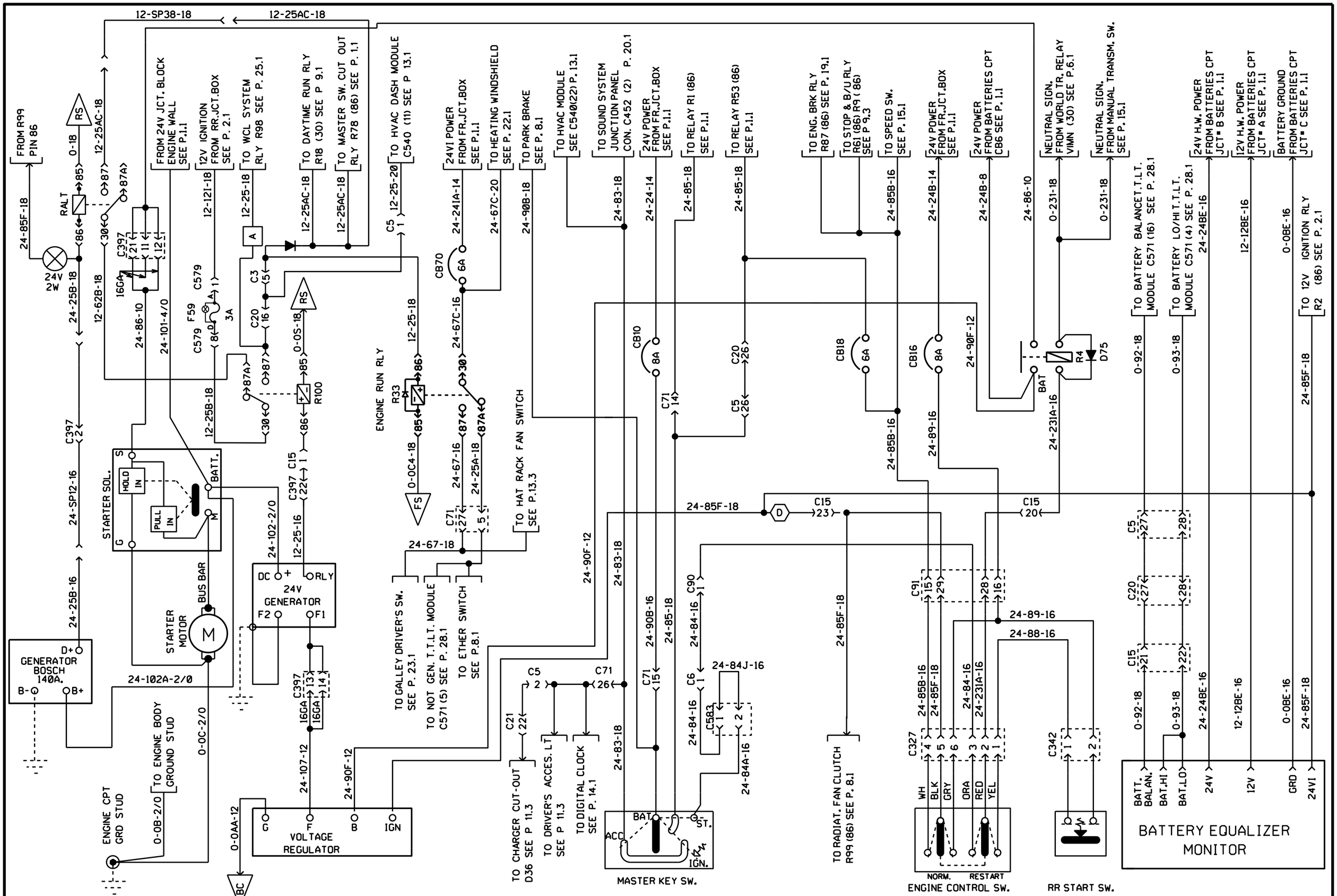

GENERATOR ADDITIONAL

CHARGING SYSTEM & ENGINE CONTROL

PREVOST	WIRING DIAGRAM	NO: D060902	PAGE: 4.1sp2	REVISION 09

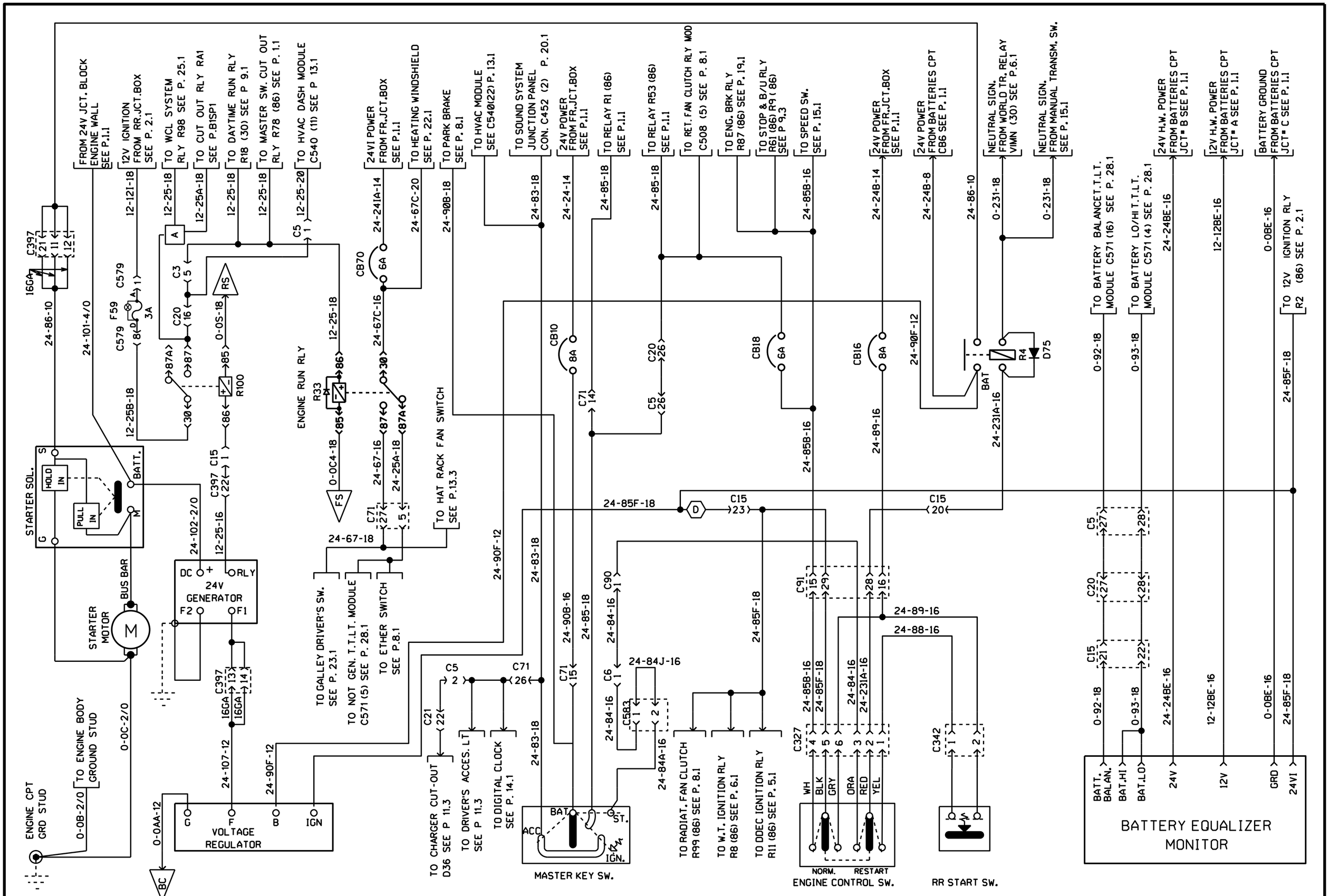

CHARGING SYSTEM & ENGINE CONTROL

ORLEANS & ADIRONDACK

PREVOST	WIRING DIAGRAM	NO: D060902	PAGE: 4.1sp3	REVISION 00

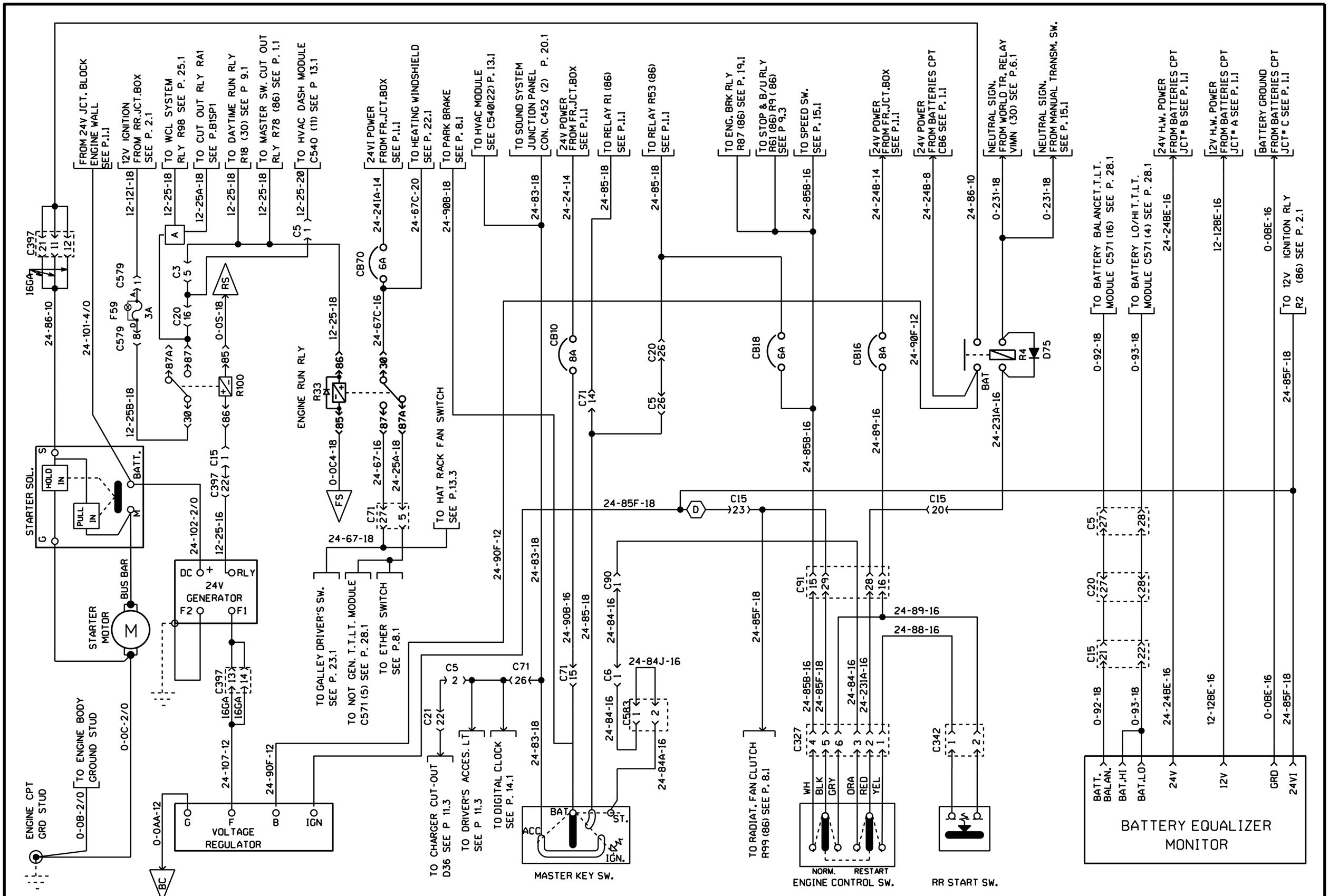

CHARGING SYSTEM & ENGINE CONTROL

ORLEANS & ADIRONDACK

PREVOST	WIRING DIAGRAM	NO: D060902	PAGE: 4.1sp3	REVISION 09

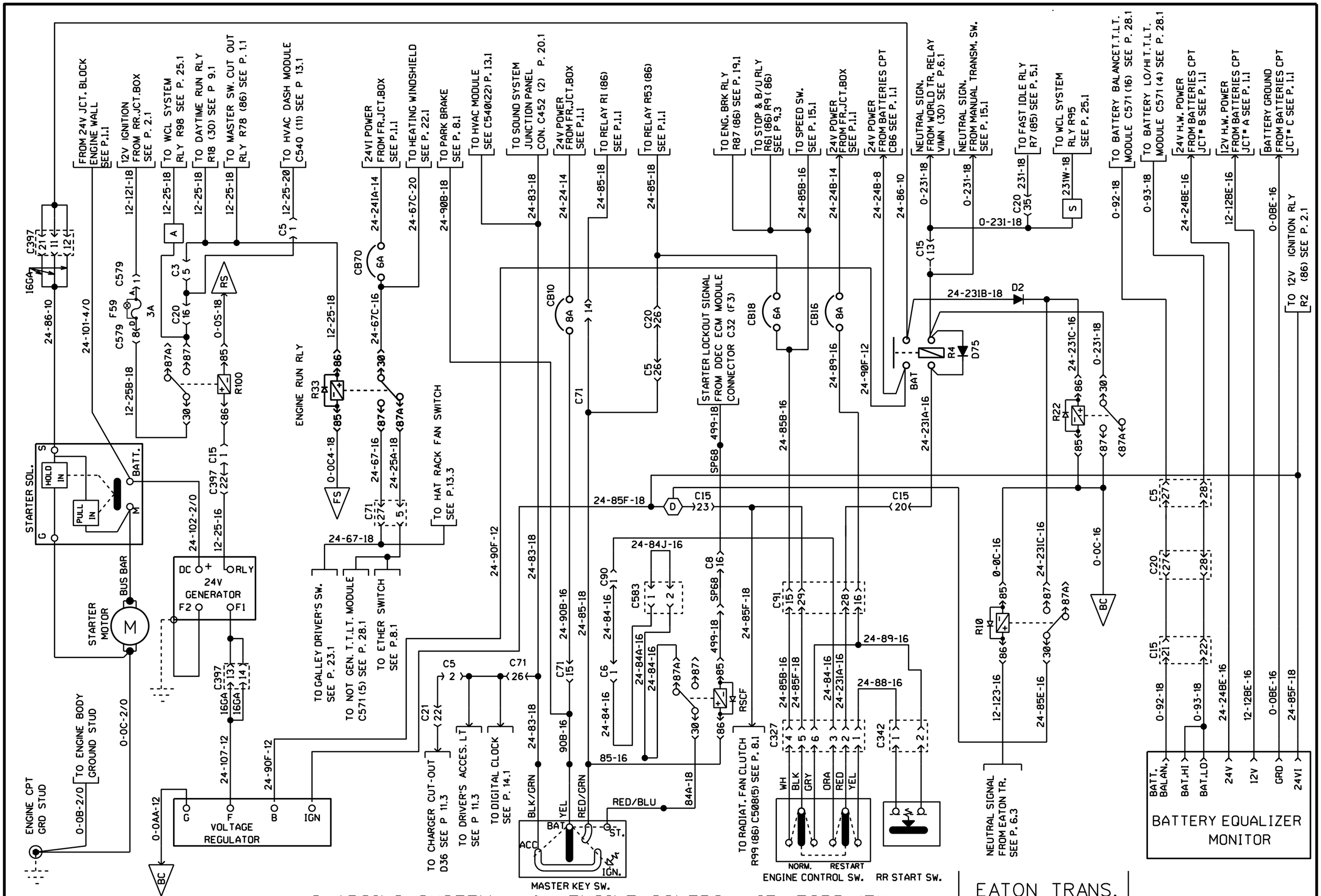

PREVOST	WIRING DIAGRAM	NO: D060902	PAGE: 4.1 sp4	REVISION 09

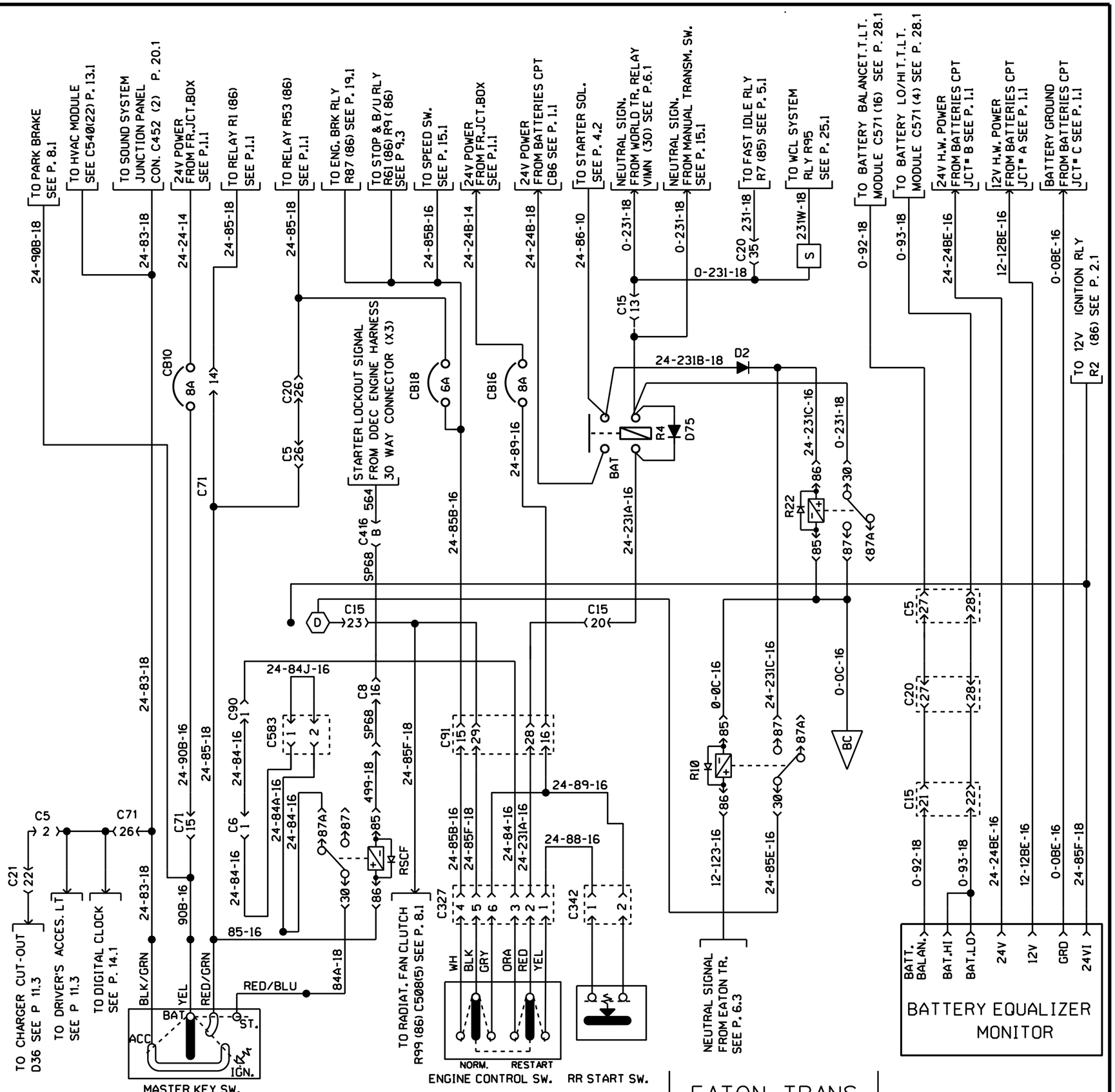

CHARGING SYSTEM & ENGINE CONTROL WITH FORD KEY

EATON TRANS. ONLY

PREVOST	WIRING DIAGRAM	NO: D060902	PAGE: 4.1 sp4	REVISION 18

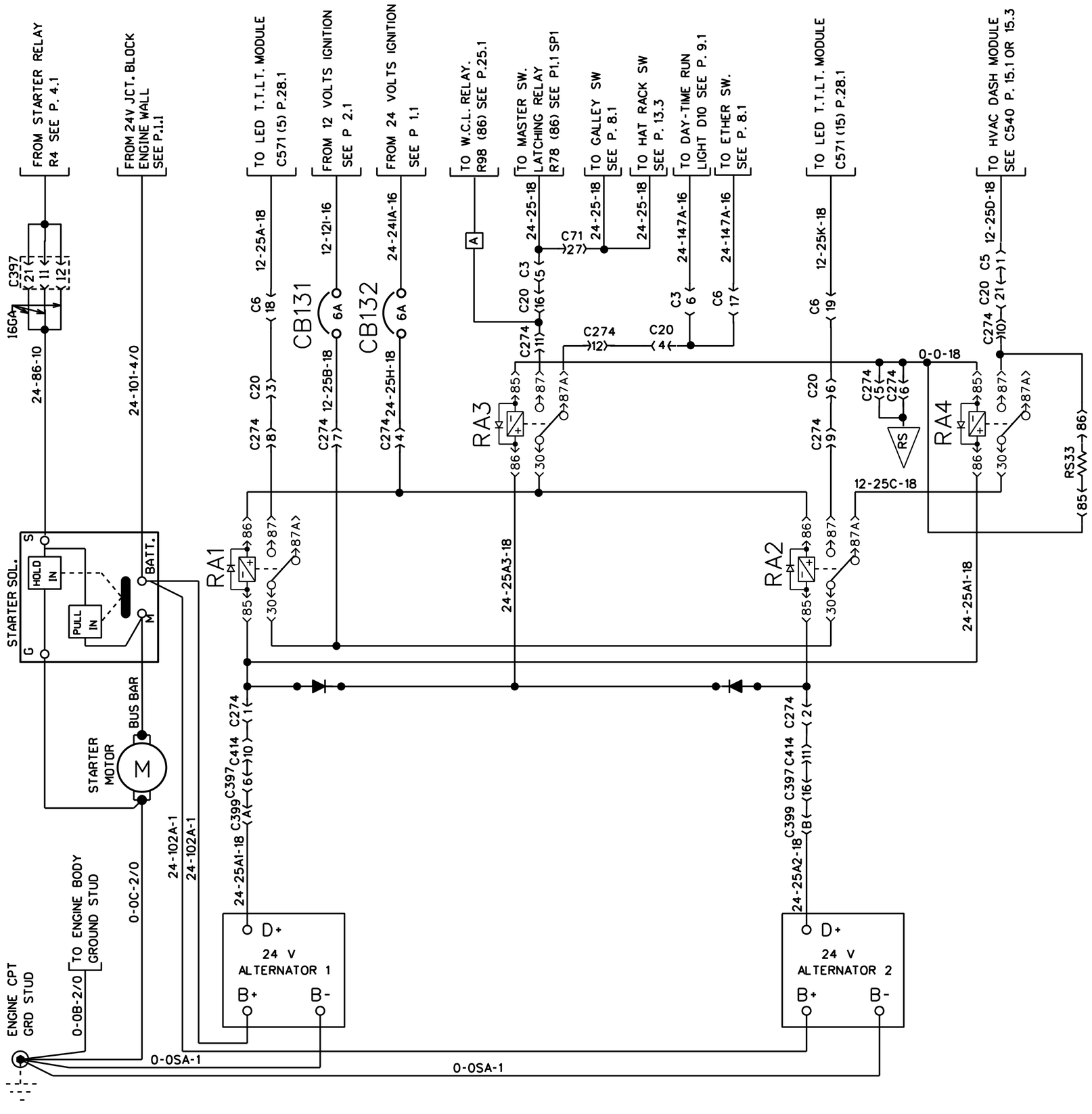

STARTER & ALTERNATOR BOSCH

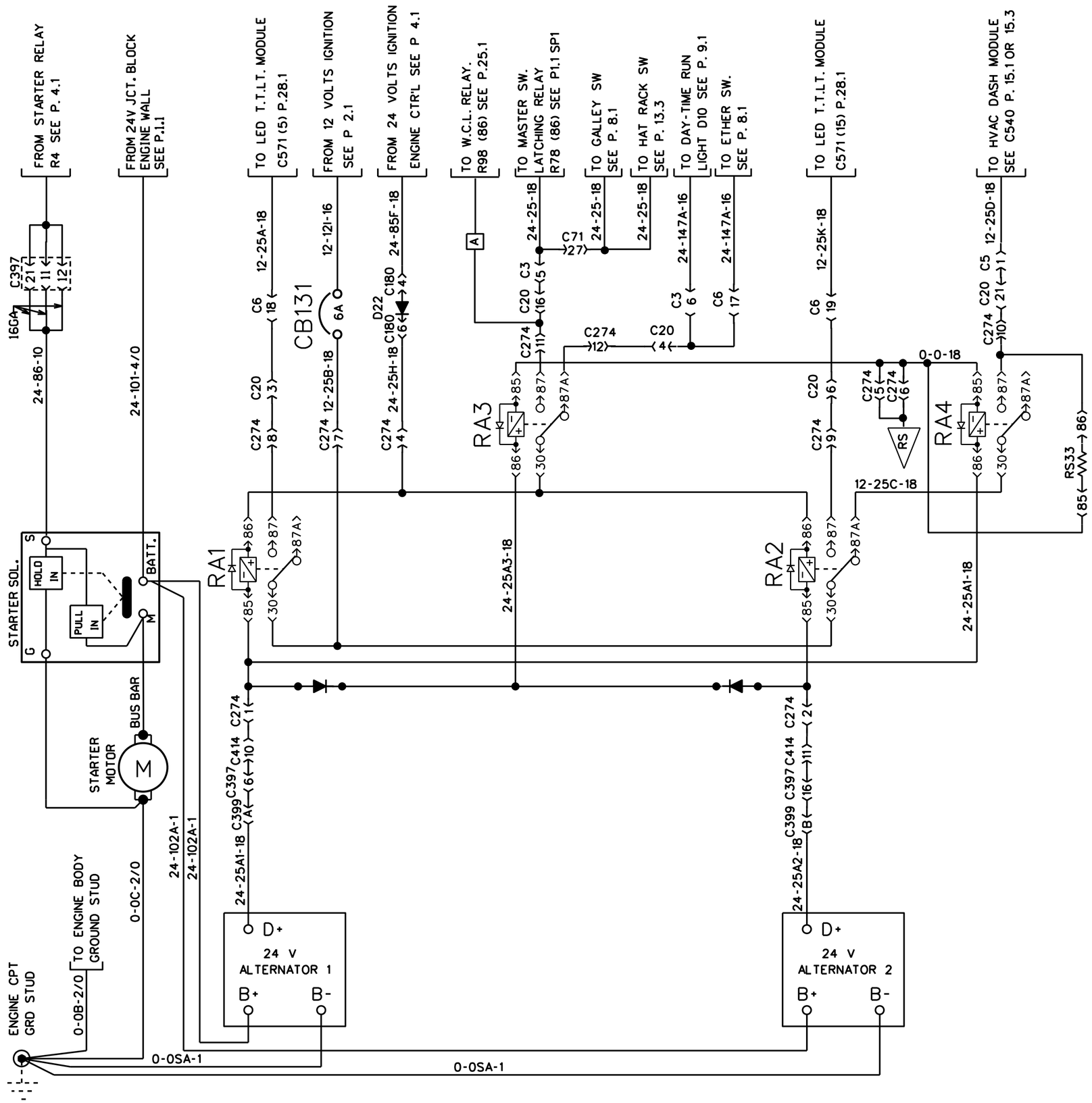

STARTER & ALTERNATOR BOSCH

PREVOST	WIRING DIAGRAM	NO: D060902	PAGE: 4.2	REVISION 19

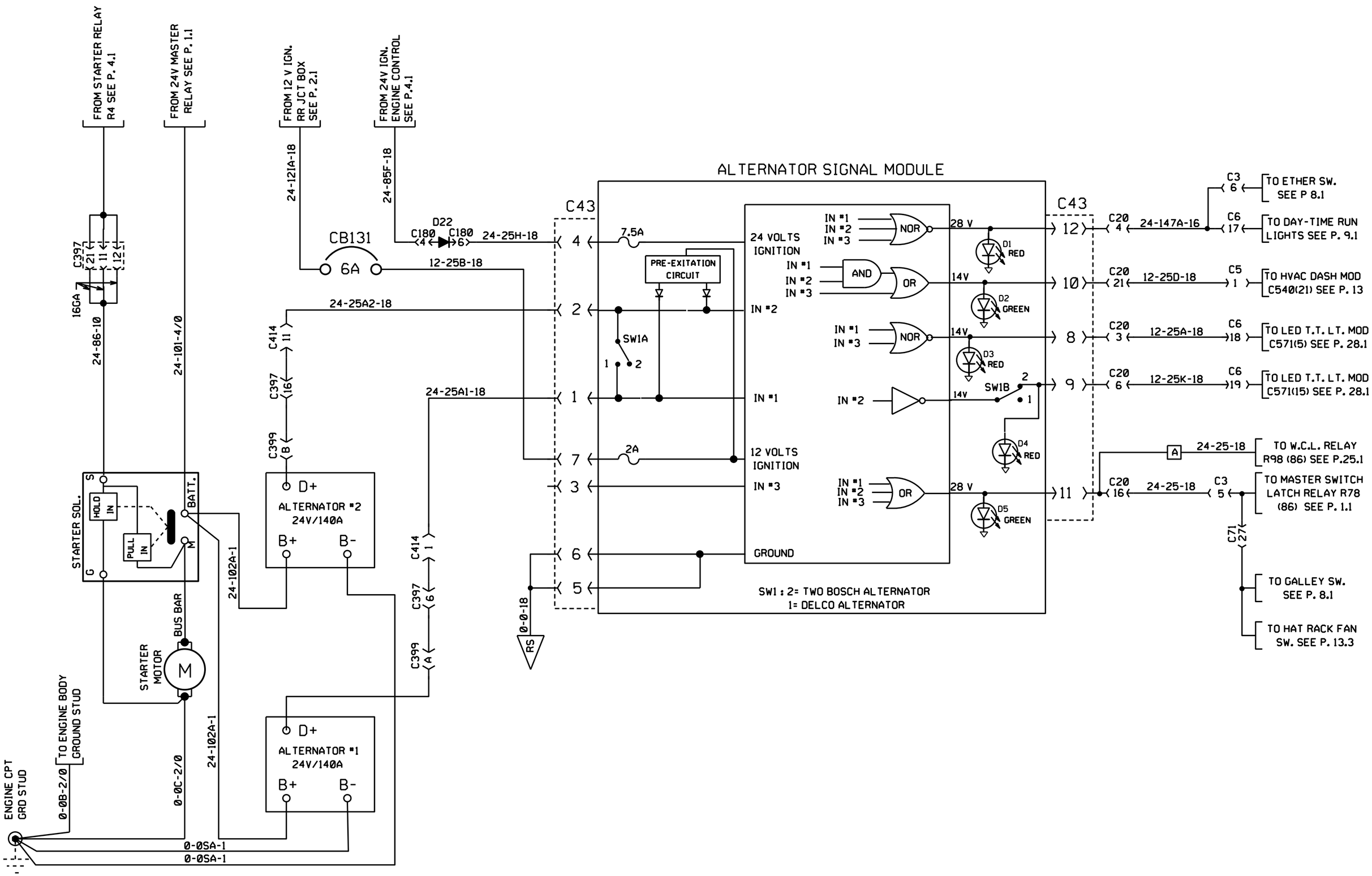

STARTER & BOSCH ALTERNATOR

PREVOST	WIRING DIAGRAM	NO: D060902	PAGE: 4.2	REVISION 21

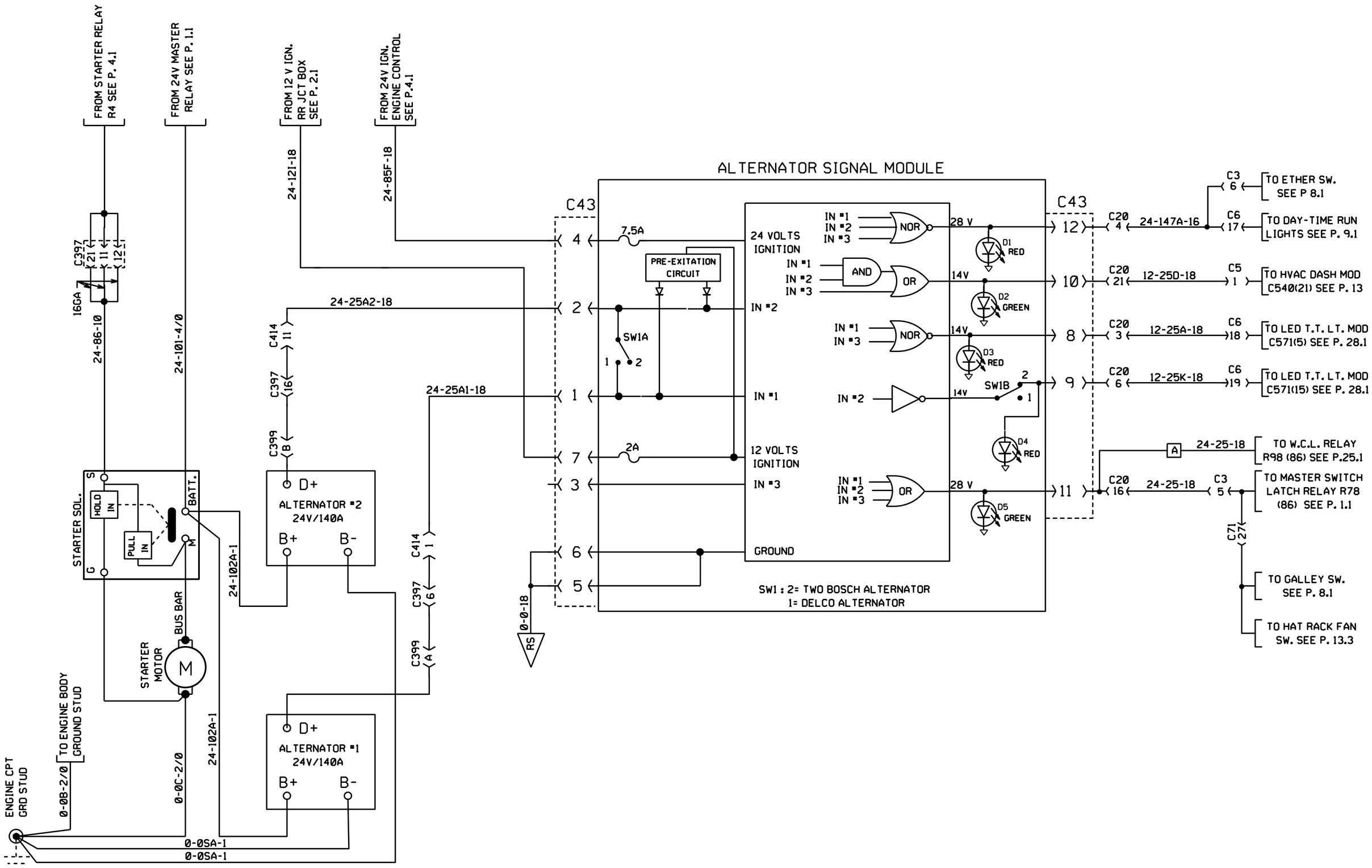

STARTER & BOSCH ALTERNATOR

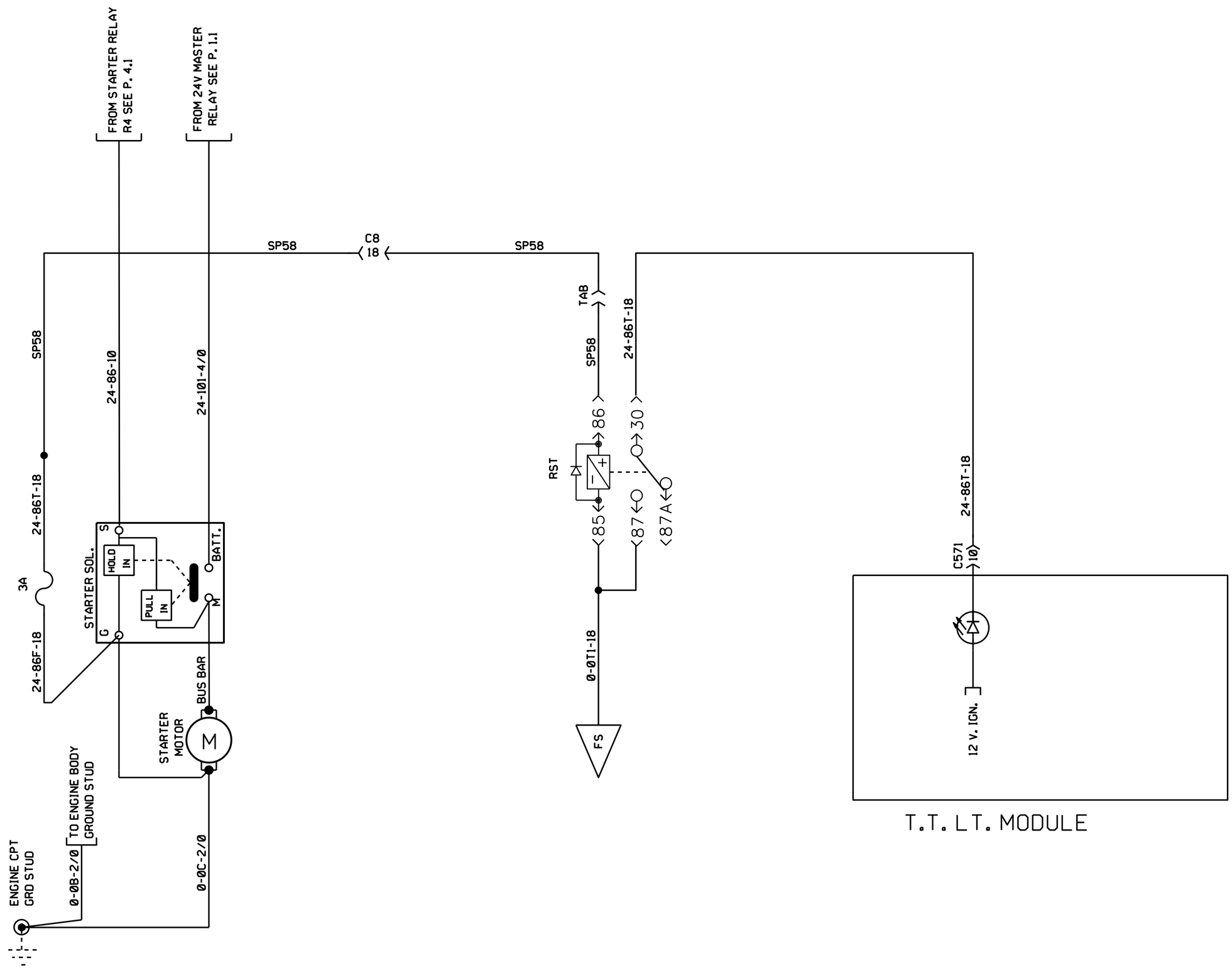

RETROFIT TELL-TALE STARTER ON

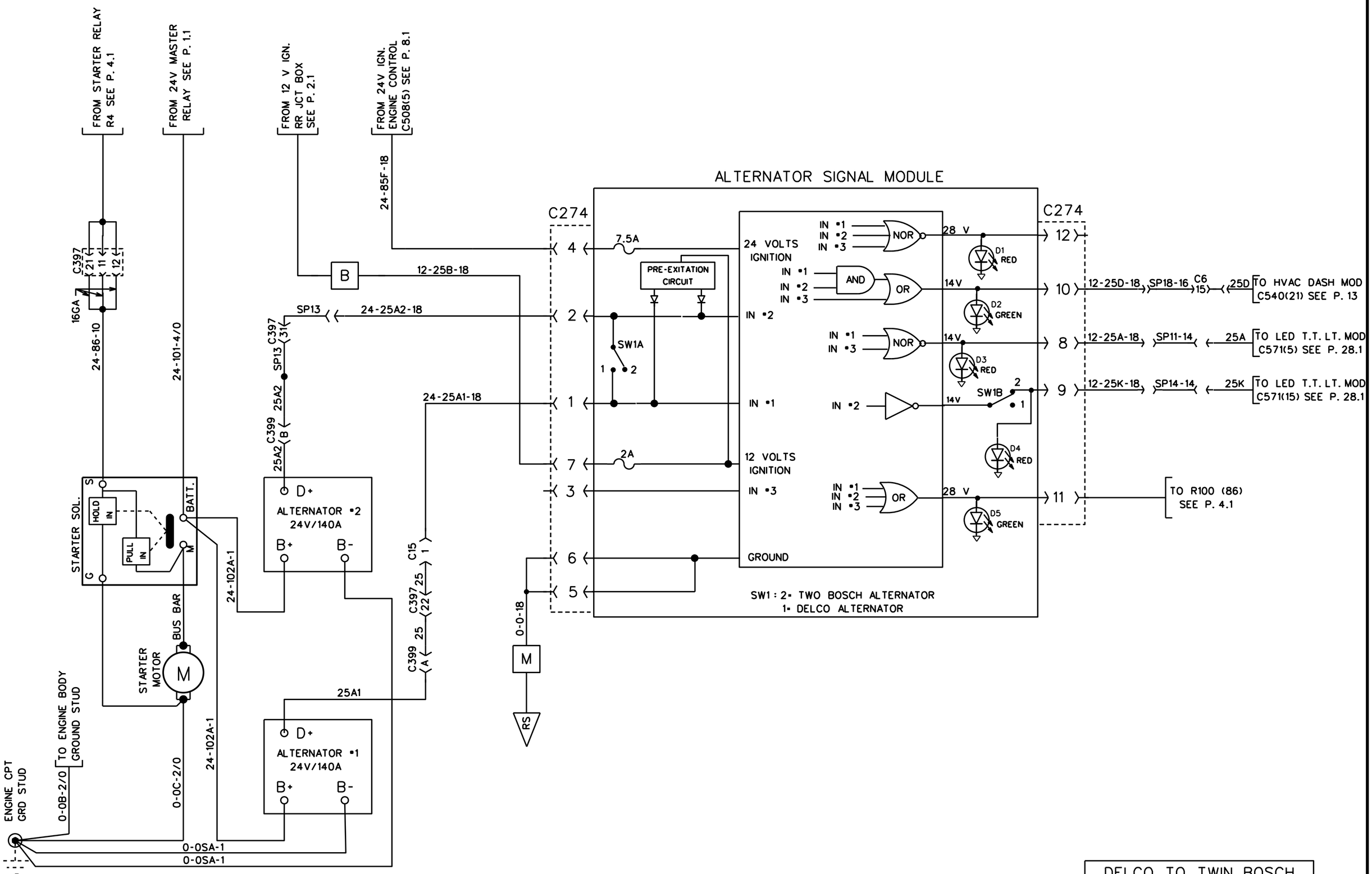

STARTER & BOSCH ALTERNATOR

DELCO TO TWIN BOSCH ALTERNATOR CONVERSION W2234,W2285 TO X2901 EXCEPT X2831

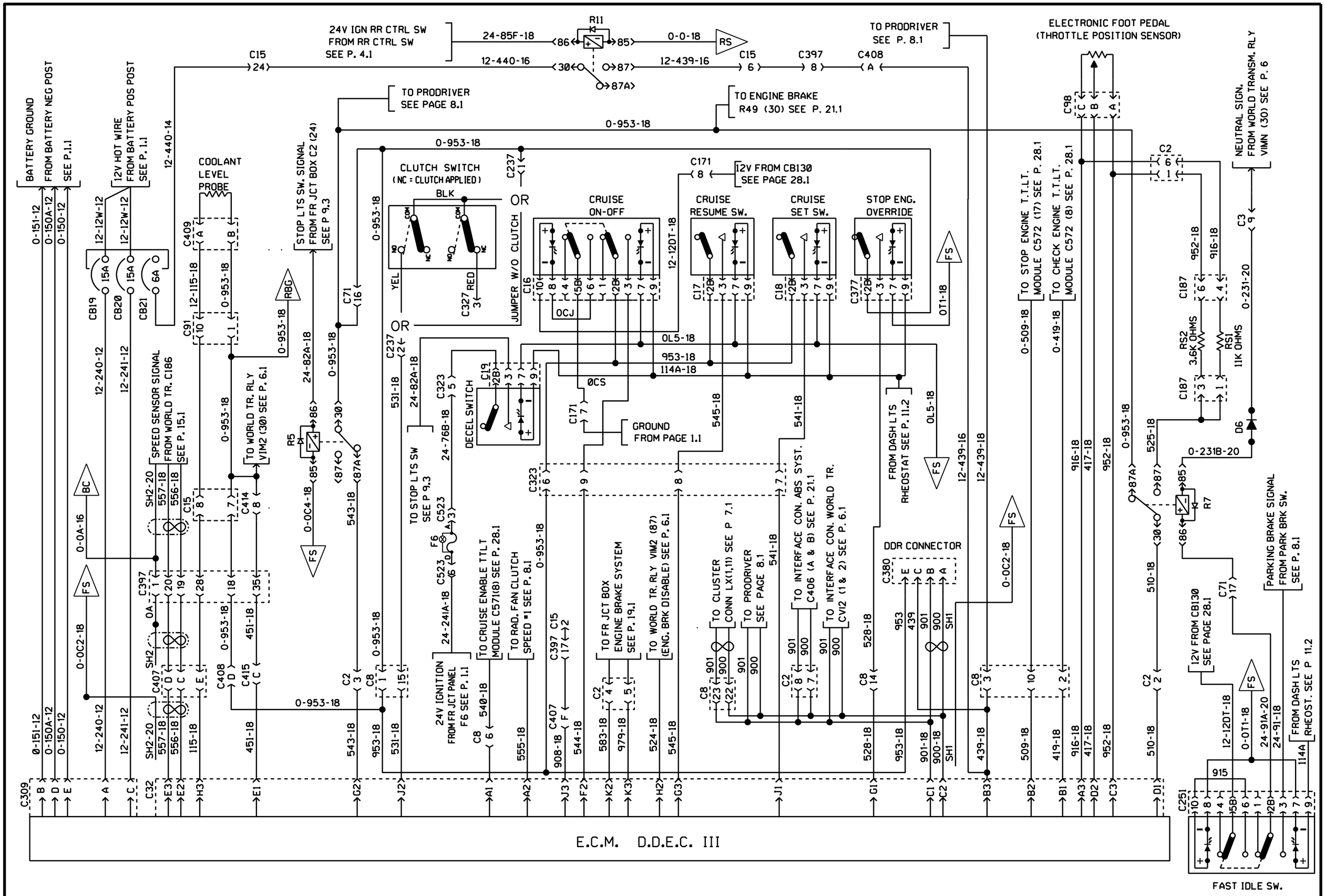

D.D.E.C. III & IV

PREVOST	WIRING DIAGRAM	NO: D060902	PAGE: 5.1	REVISION 00

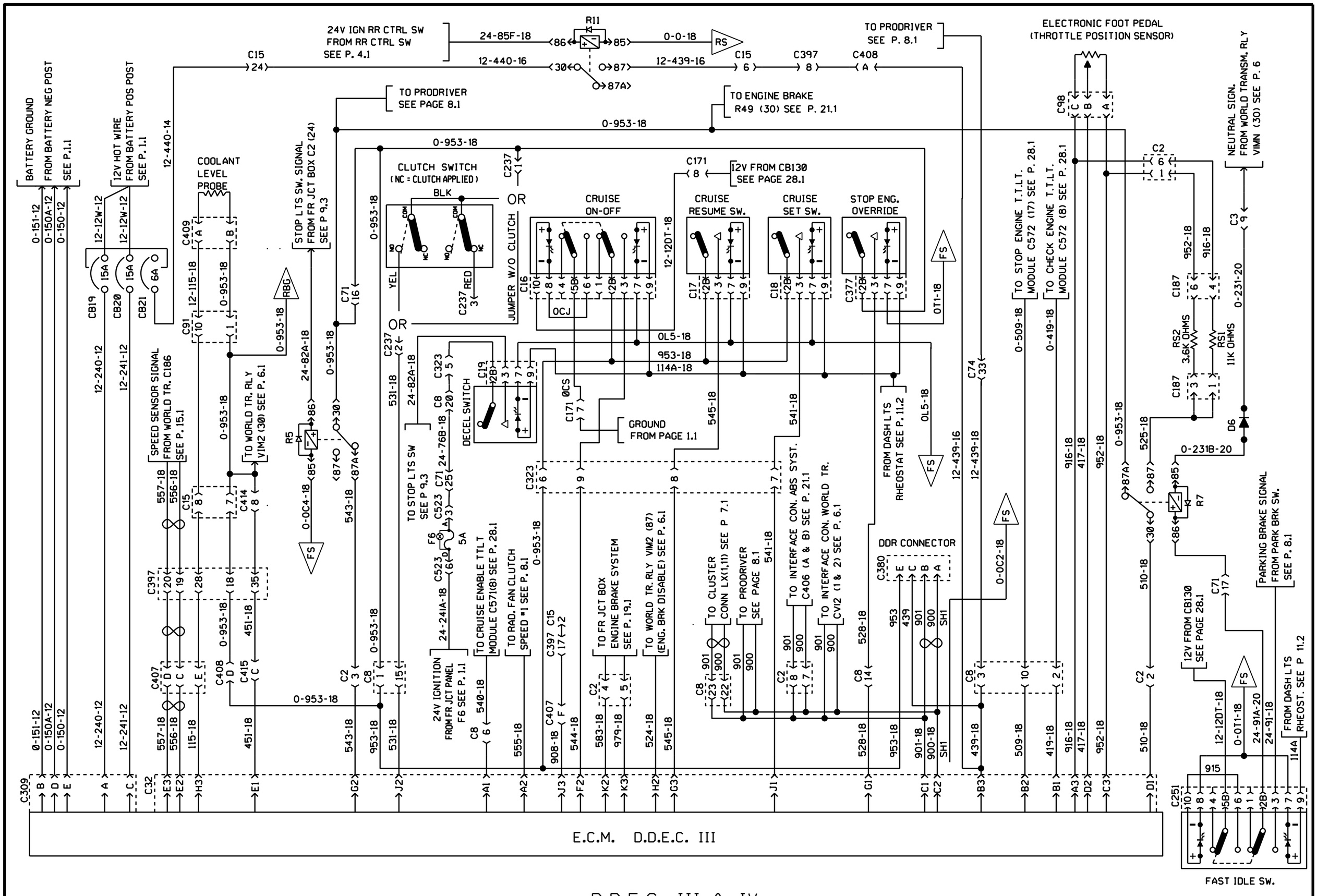

D.D.E.C. III & IV

PREVOST	WIRING DIAGRAM	NO: D060902	PAGE: 5.1	REVISION 01

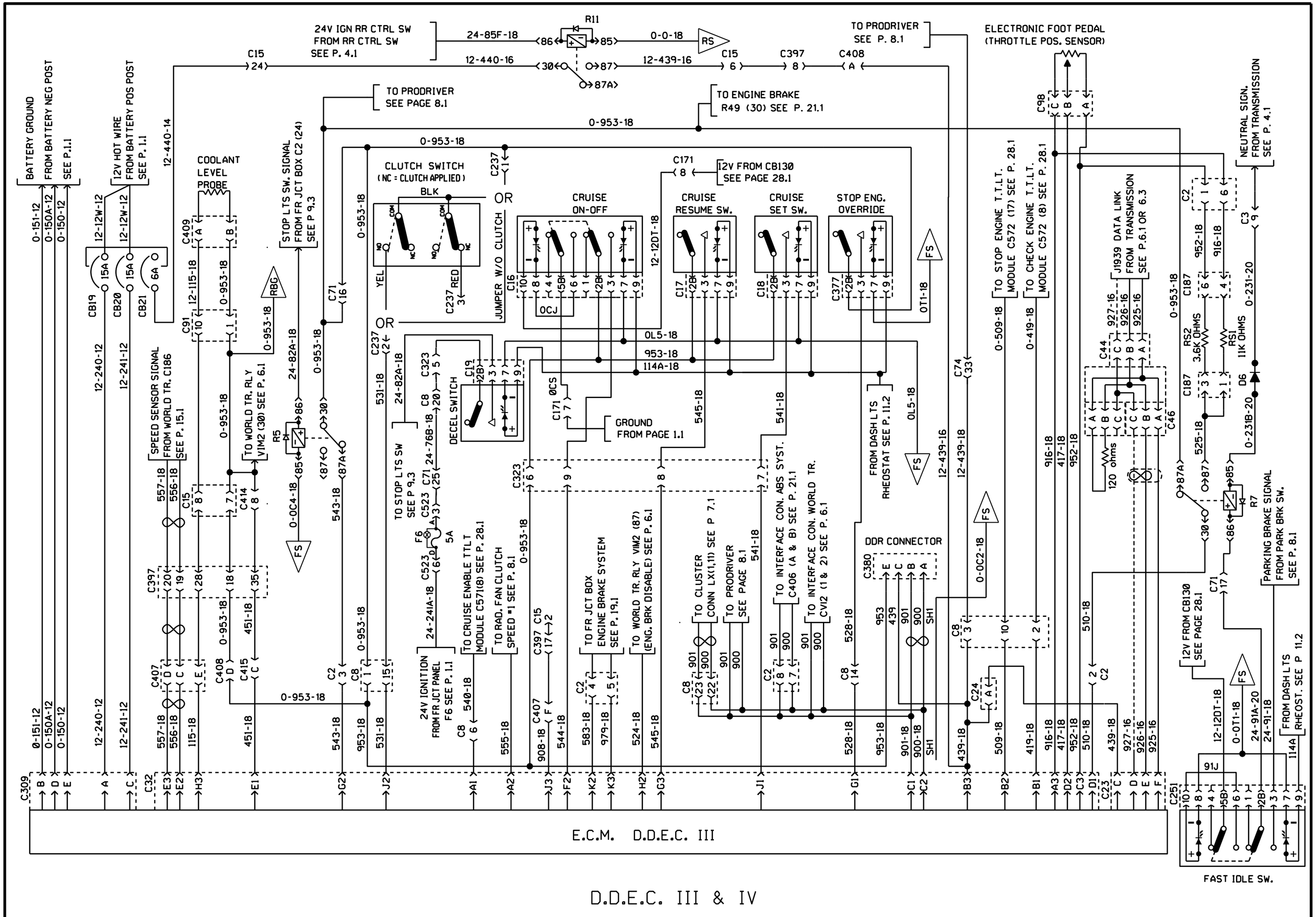

D.D.E.C. III & IV

PREVOST	WIRING DIAGRAM	NO: D060902	PAGE: 5.1 SP3	REVISION 00

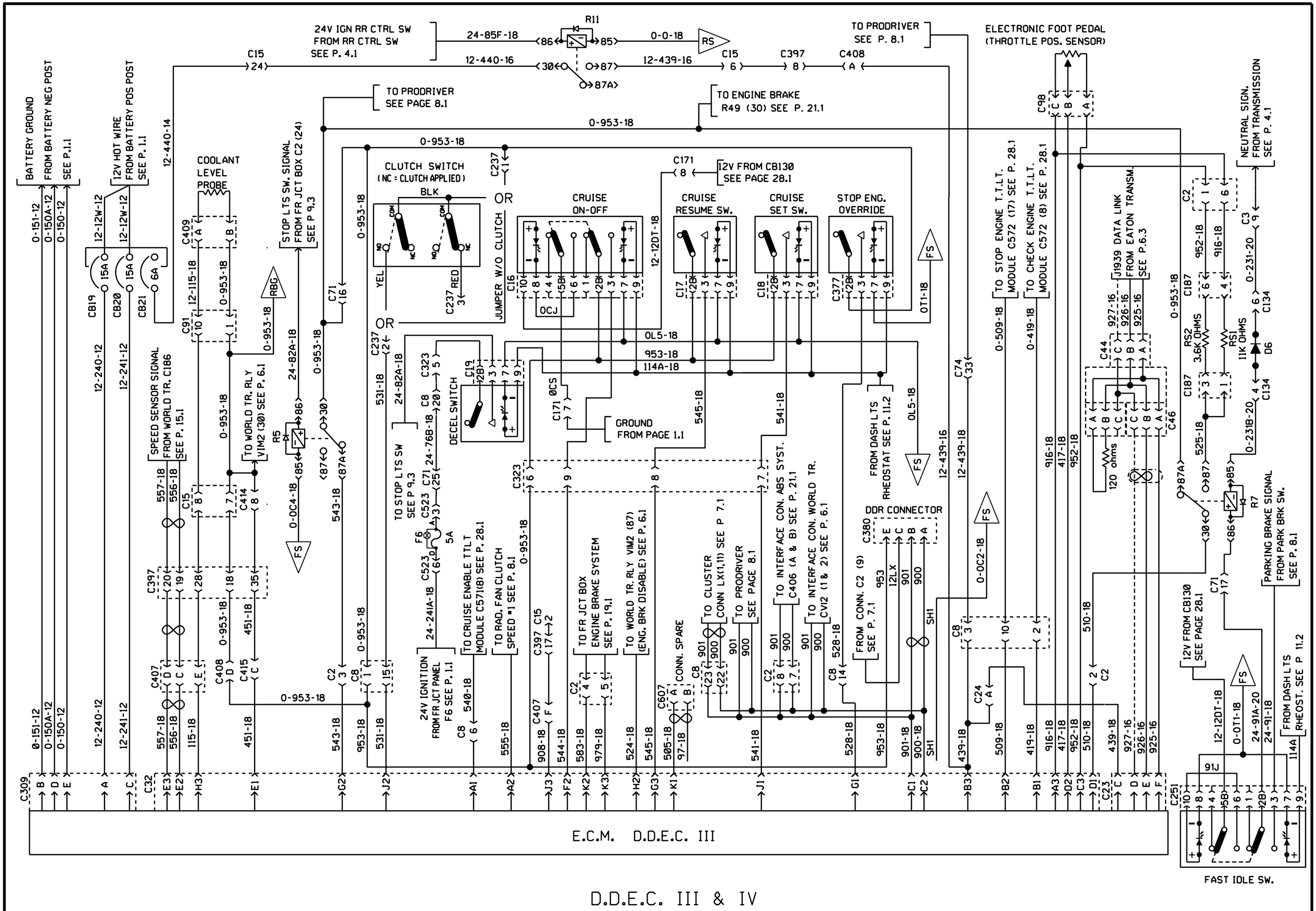

D.D.E.C. III & IV

PREVOST	WIRING DIAGRAM	NO: D060902	PAGE: 5.1	REVISION 08

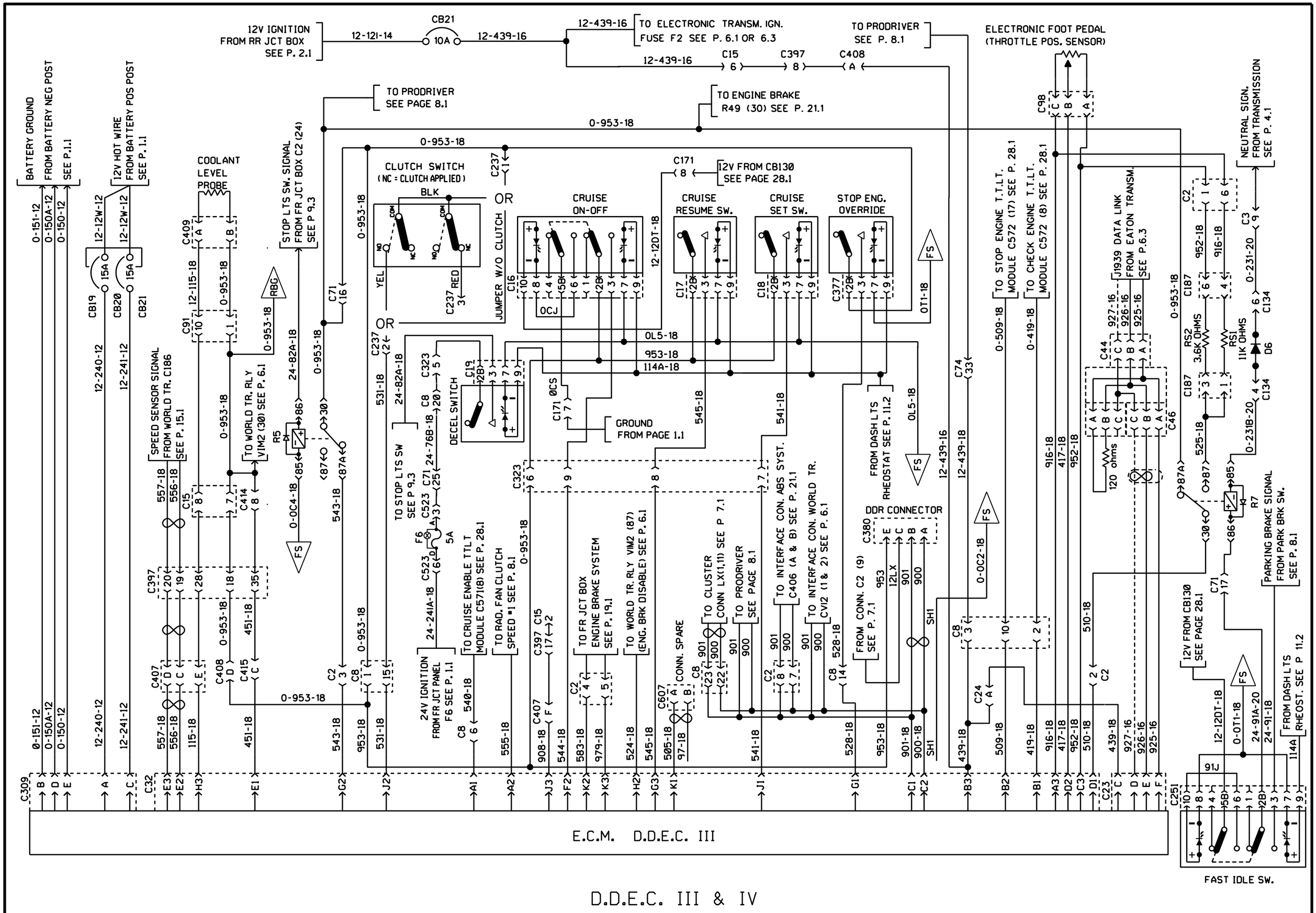

D.D.E.C. III & IV

PREVOST	WIRING DIAGRAM	NO: D060902	PAGE: 5.1	REVISION 09

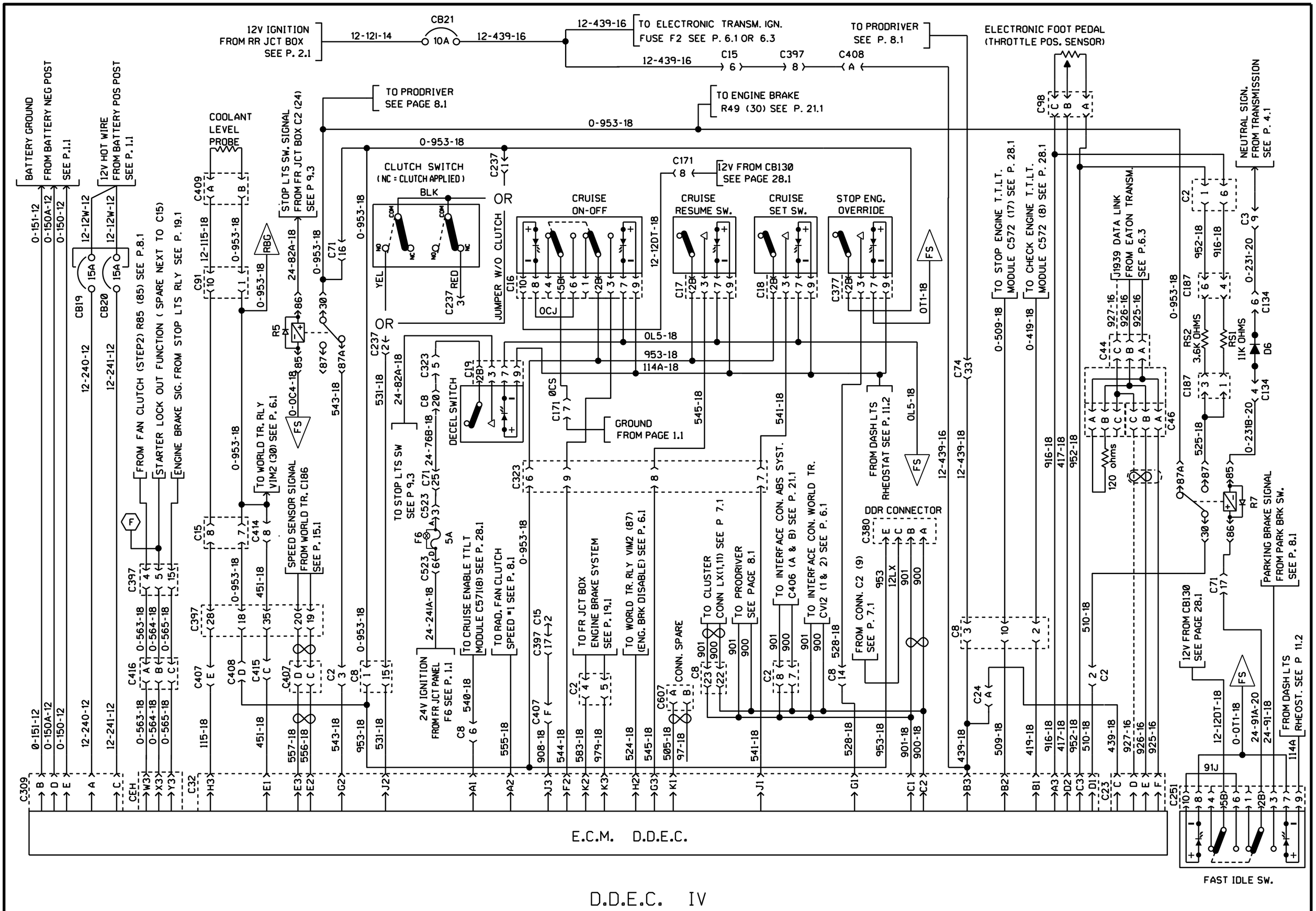

PREVOST	WIRING DIAGRAM	NO: D060902	PAGE: 5.1	REVISION 24

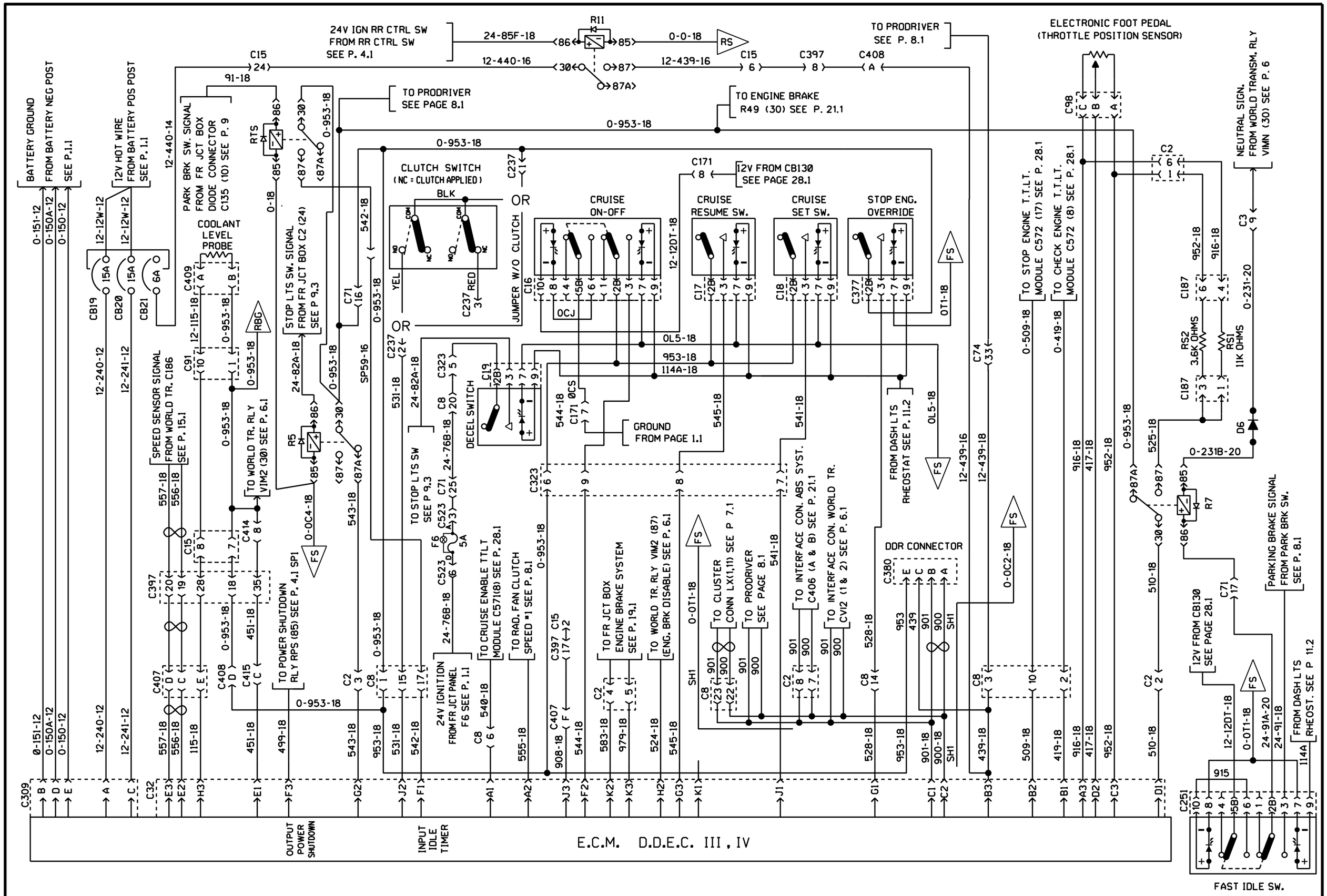

D.D.E.C. III , IV

PREVOST	WIRING DIAGRAM	NO: D060902	PAGE: 5.1 sp1	REVISION 01

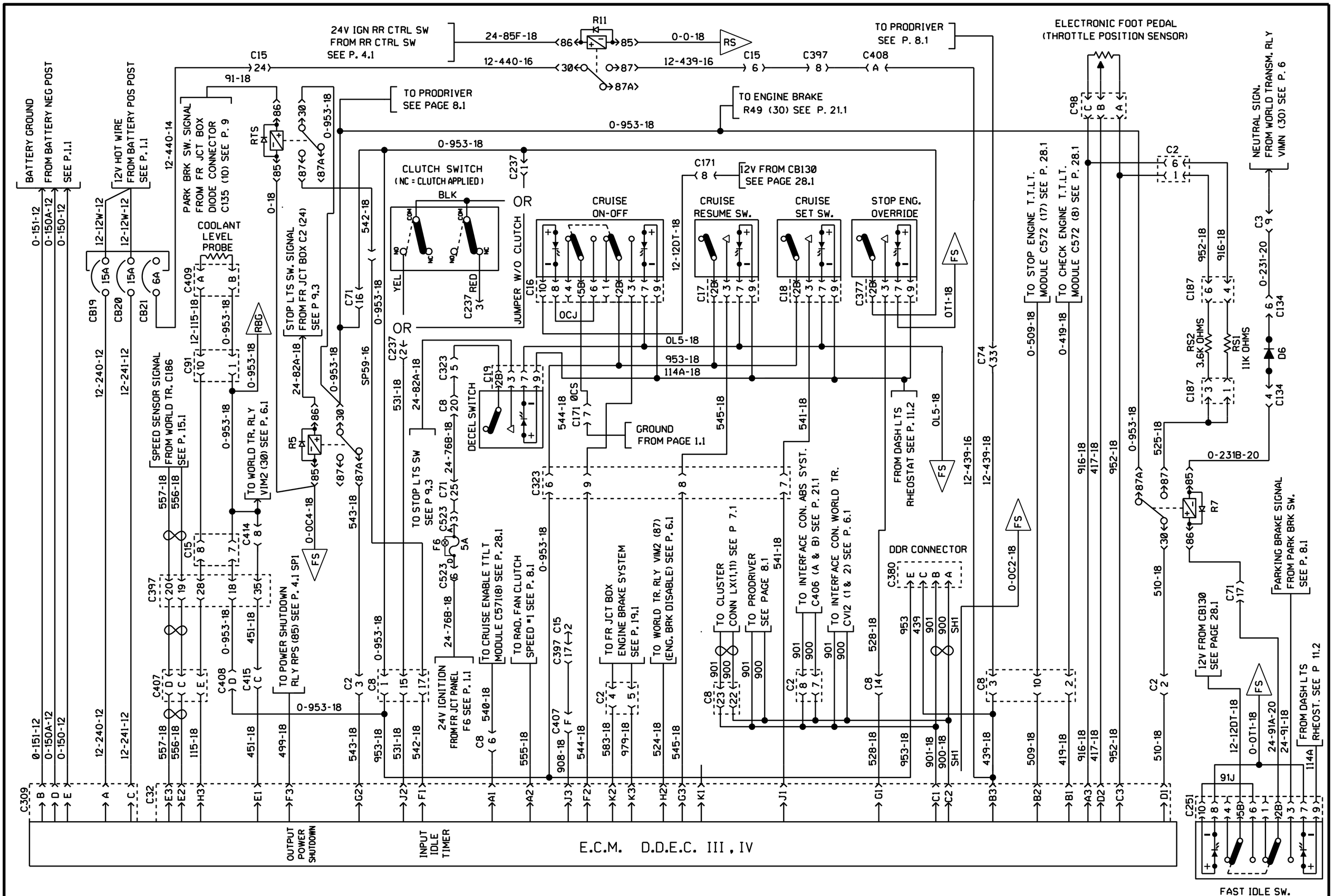

D.D.E.C. III , IV

PREVOST	WIRING DIAGRAM	NO: D060902	PAGE: 5.1 sp1	REVISION 08

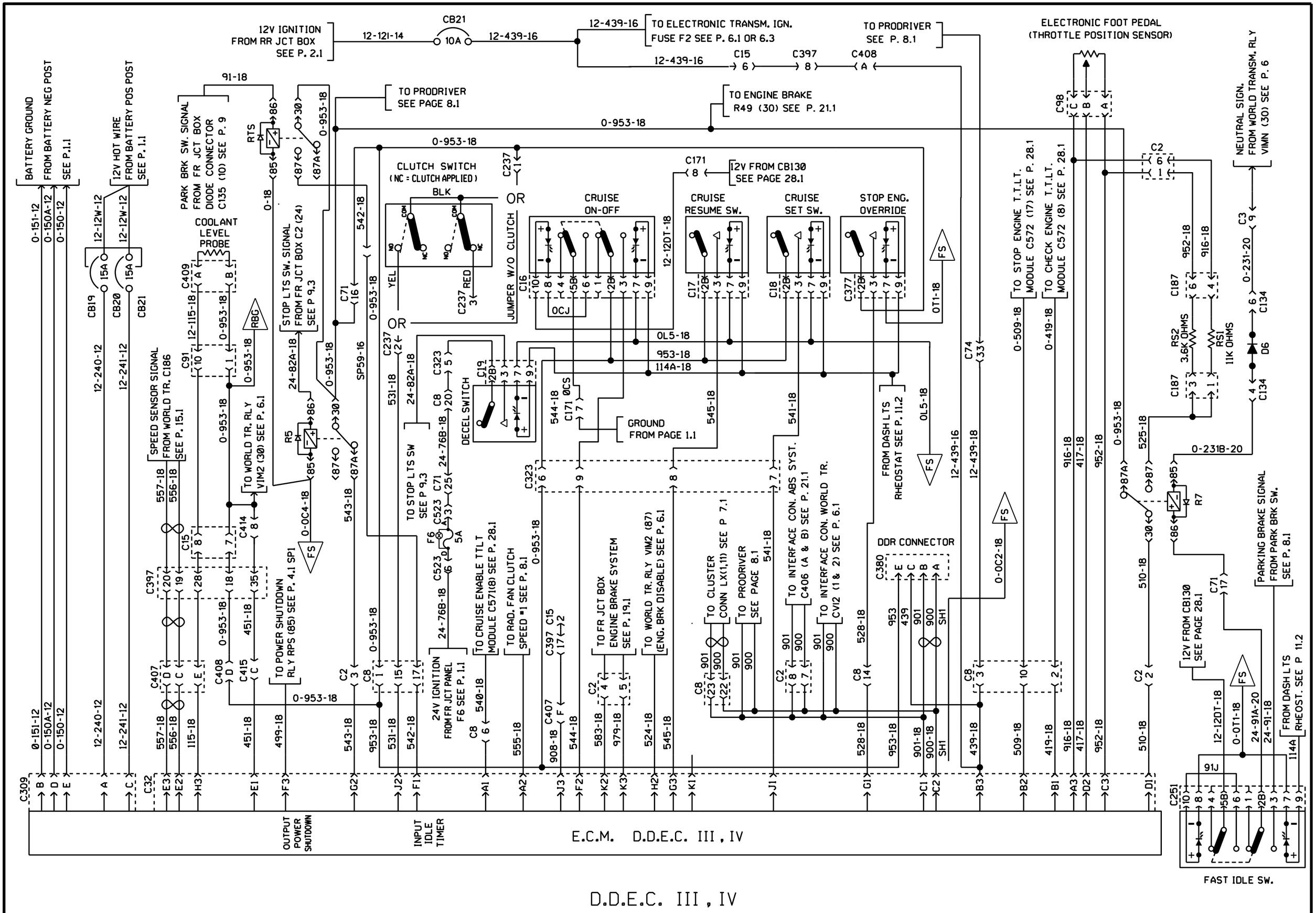

D.D.E.C. III , IV

PREVOST	WIRING DIAGRAM	NO: D060902	PAGE: 5.1 sp1	REVISION 09

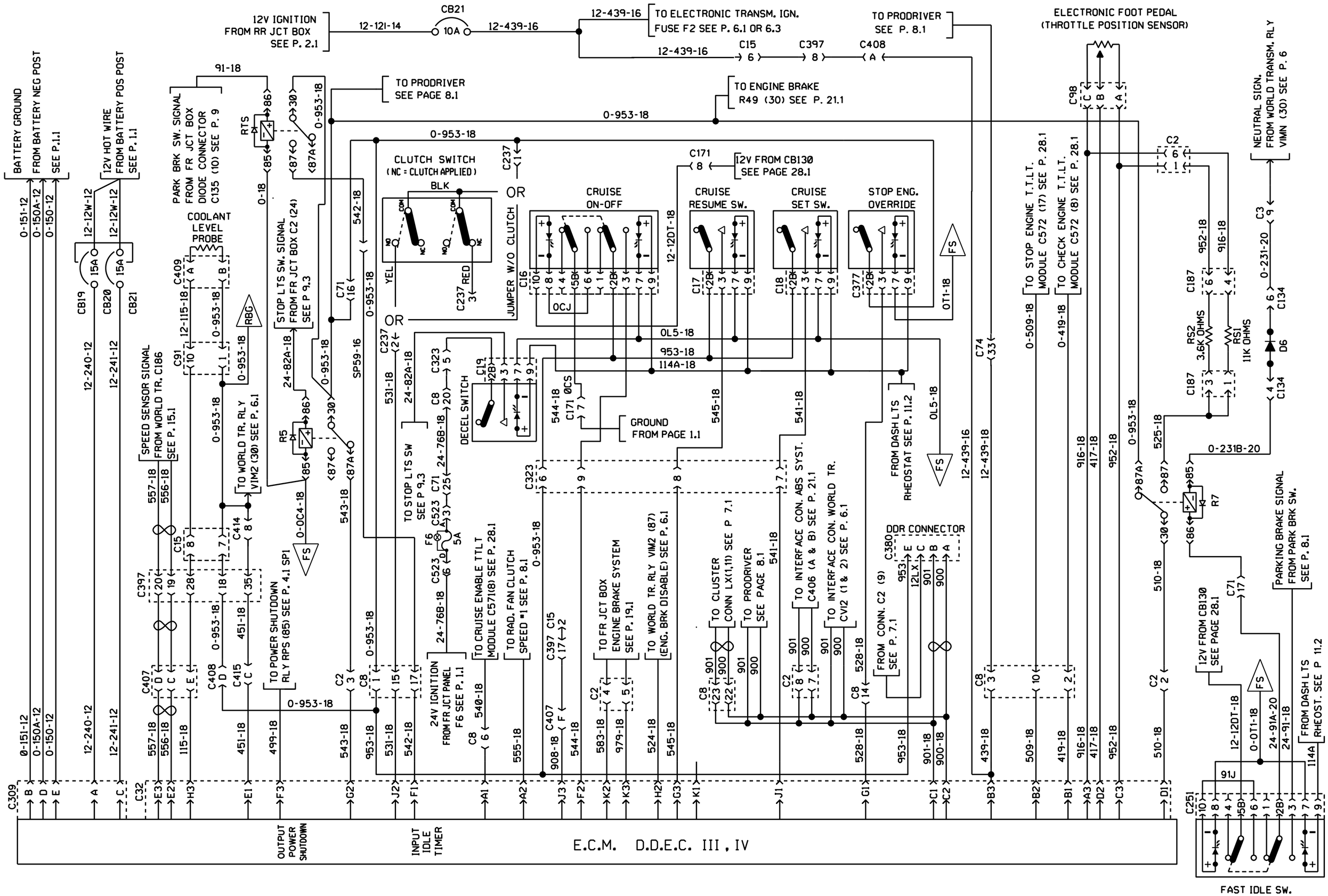

D.D.E.C. III , IV

PREVOST	WIRING DIAGRAM	NO: D060902	PAGE: 5.1 sp1	REVISION 17

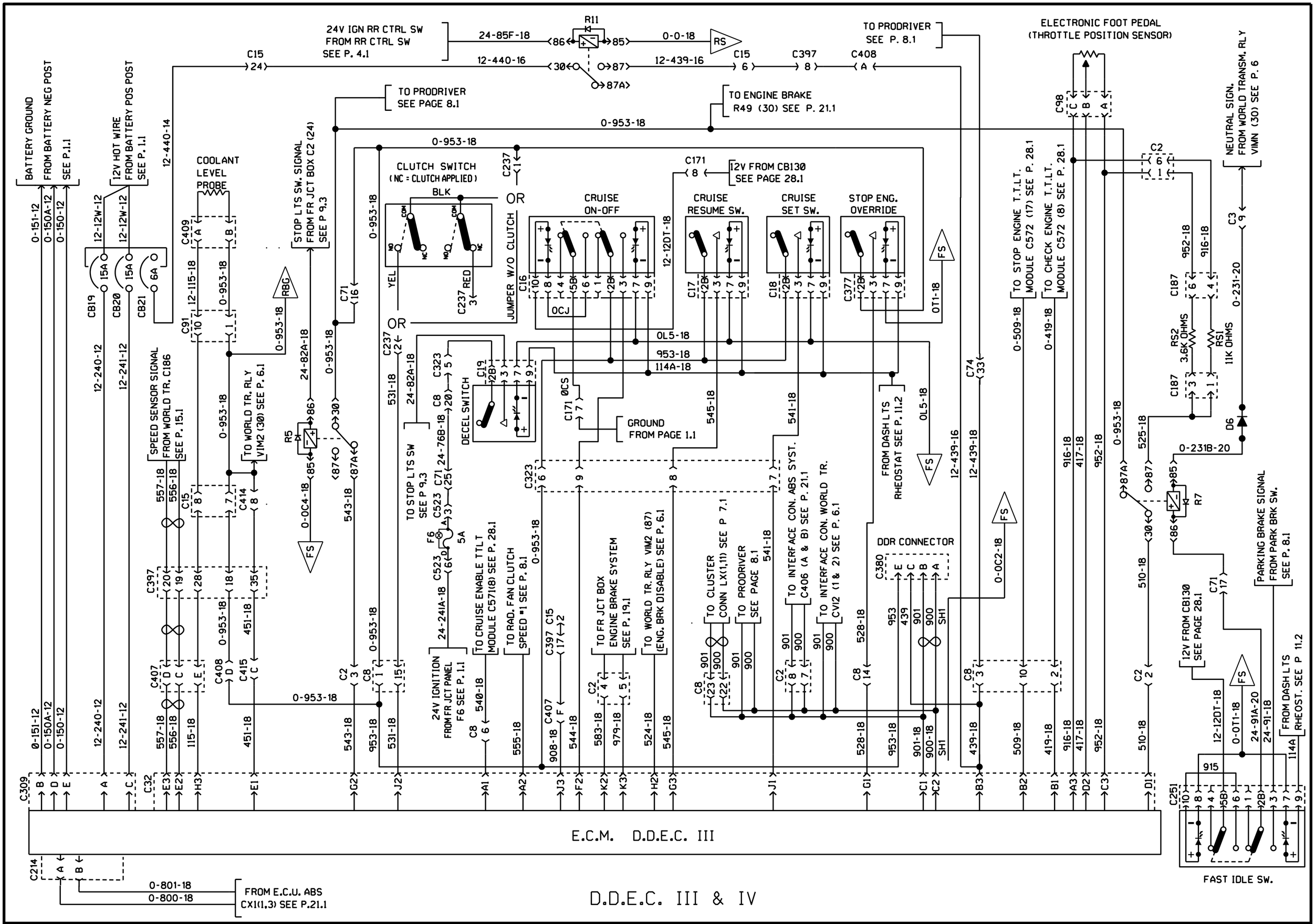

PREVOST	WIRING DIAGRAM	NO: D060902	PAGE: 5.1 SP2	REVISION 00

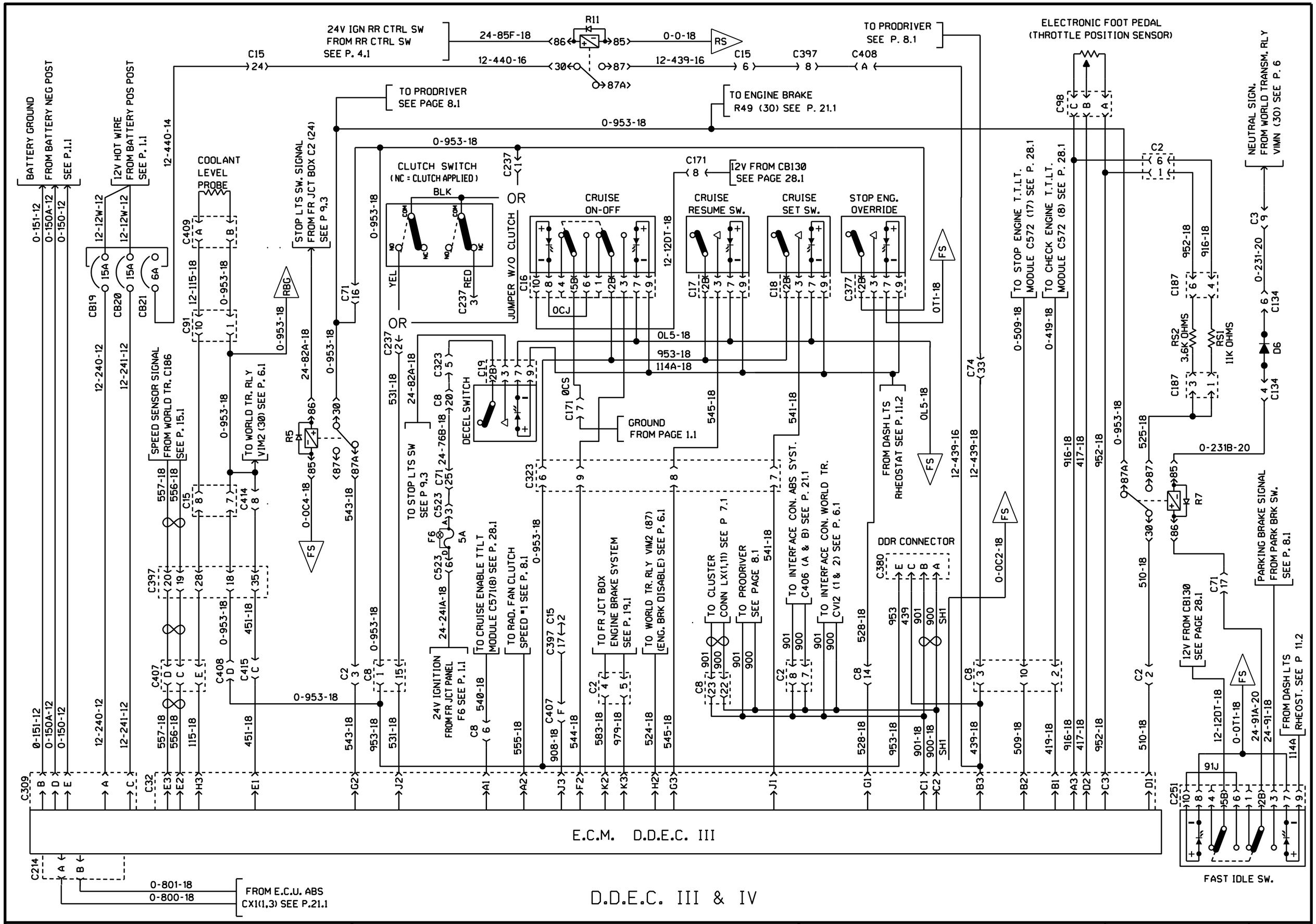

PREVOST	WIRING DIAGRAM	NO: D060902	PAGE: 5.1 SP2	REVISION 08

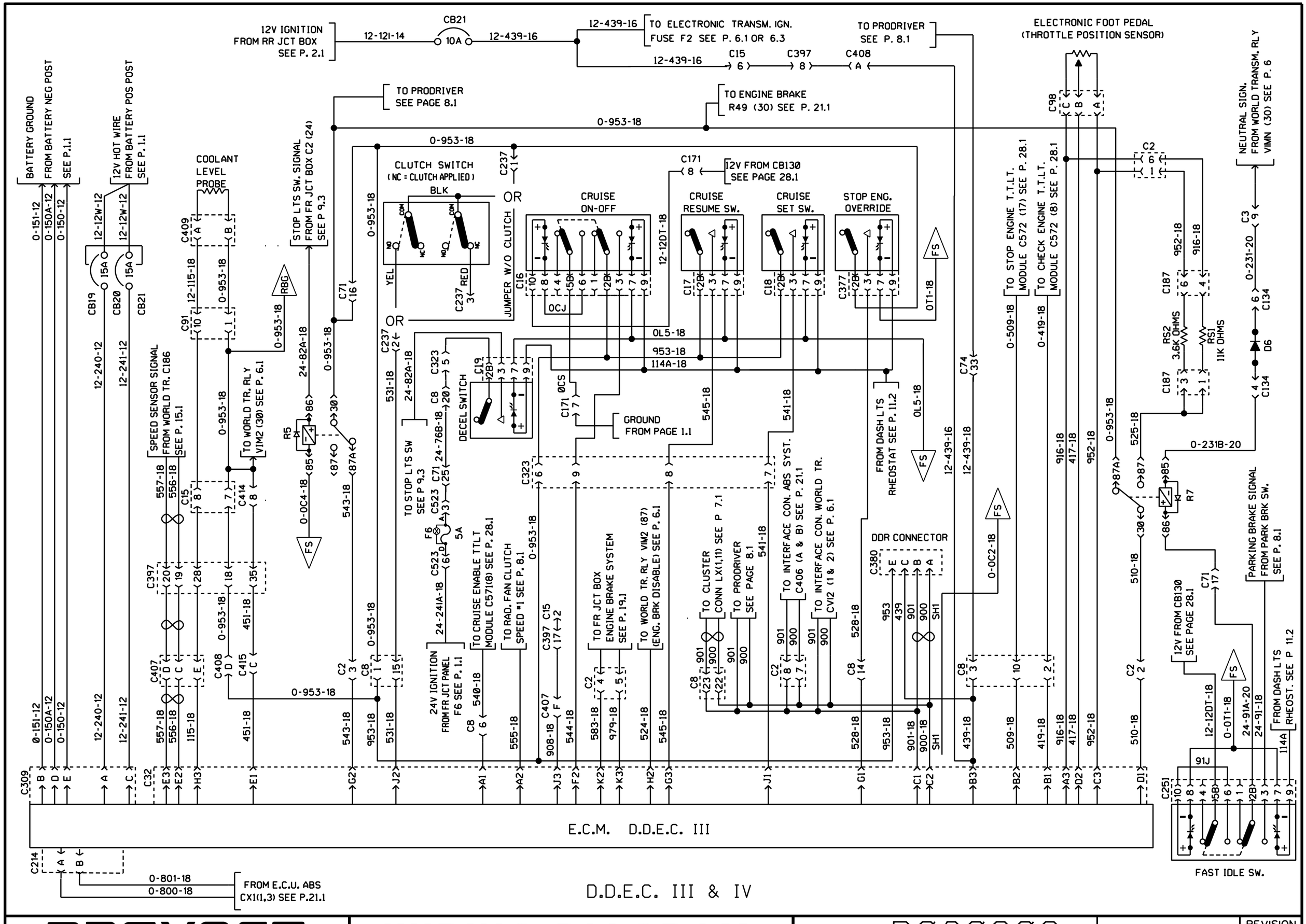

PREVOST | WIRING DIAGRAM | NO: D060902 | PAGE: 5.1 SP2 | REVISION 09

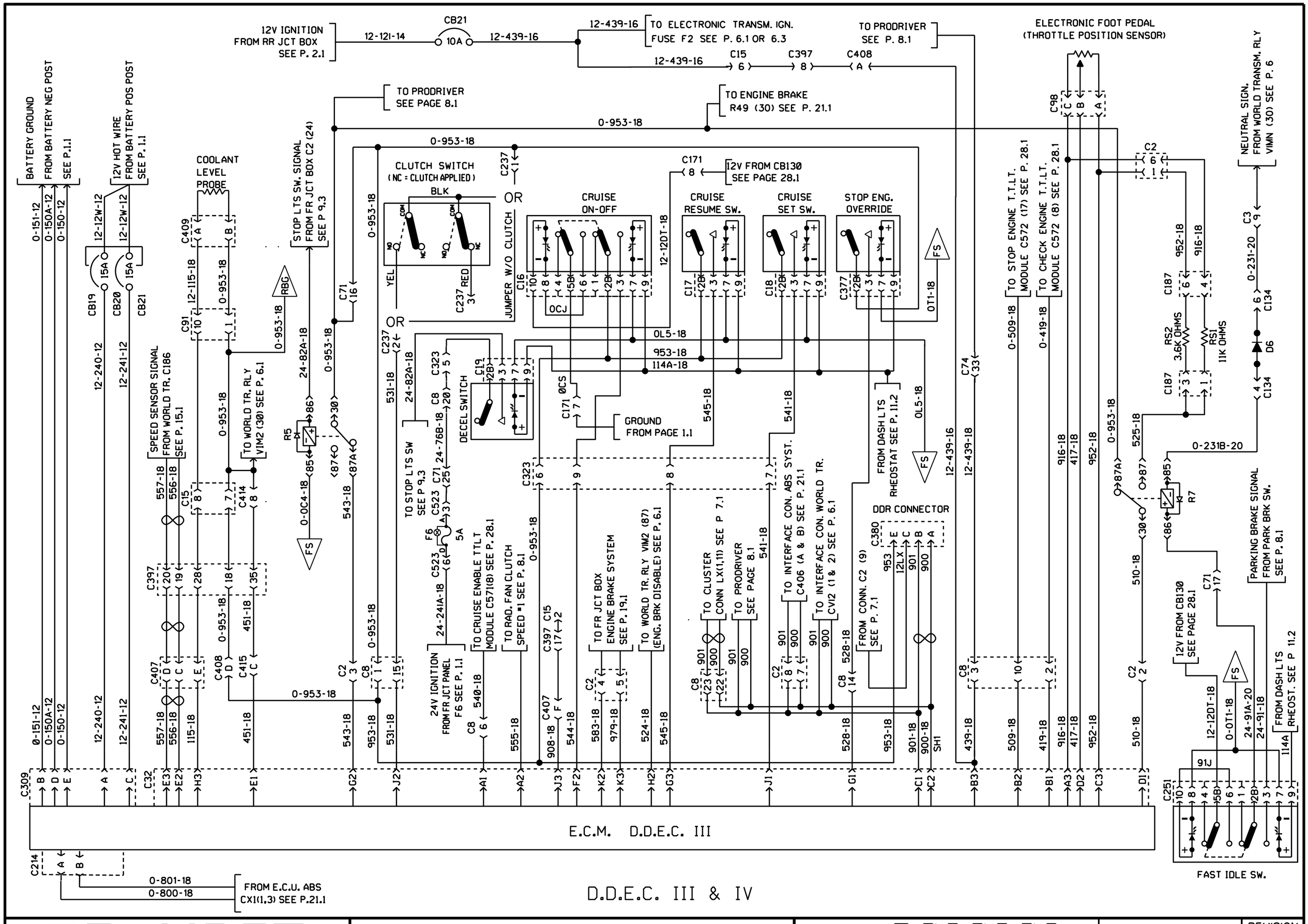

PREVOST	WIRING DIAGRAM	NO: D060902	PAGE: 5.1 SP2	REVISION 17

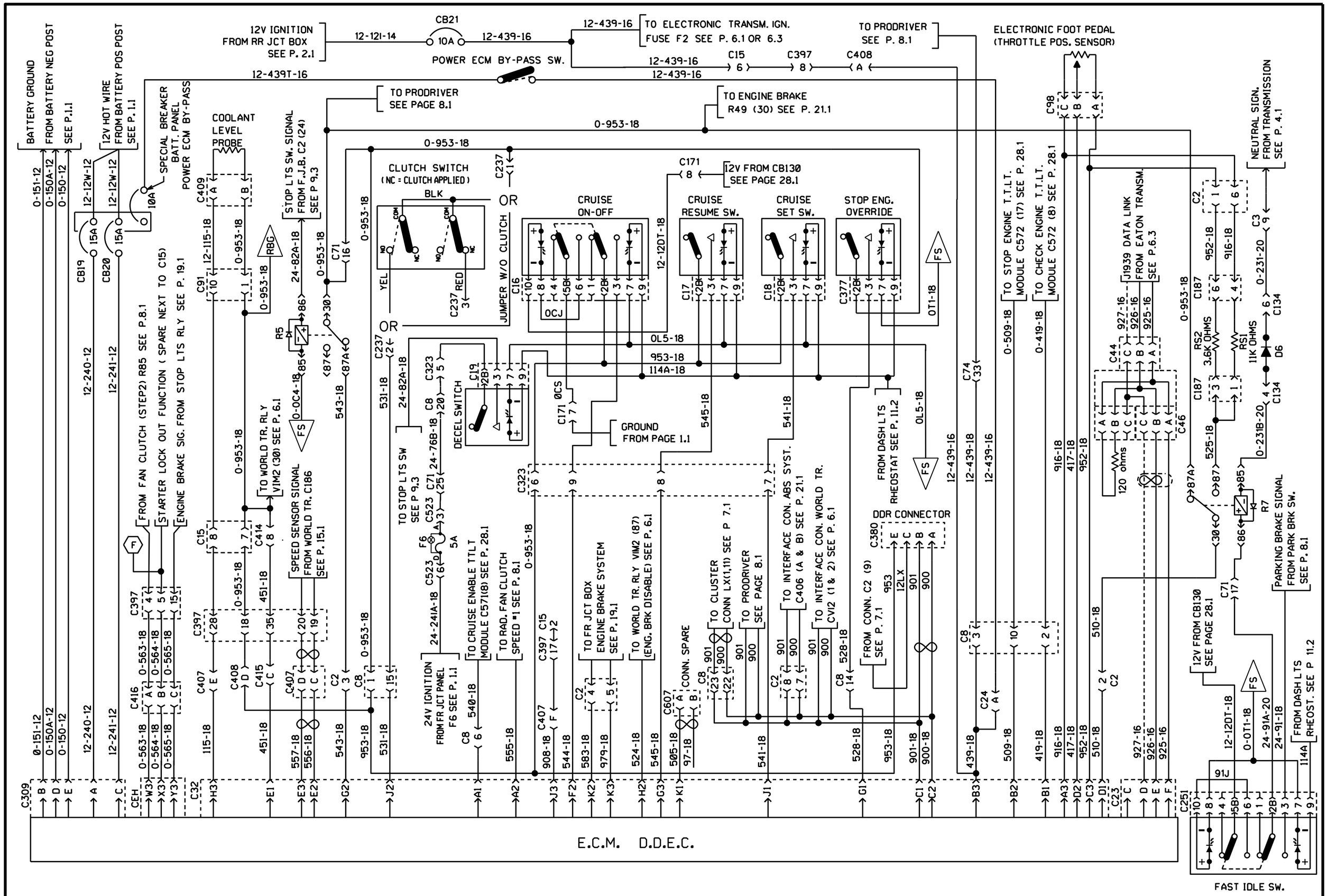

PREVOST	WIRING DIAGRAM	NO: D060902	PAGE: 5.1 SP3	REVISION 00

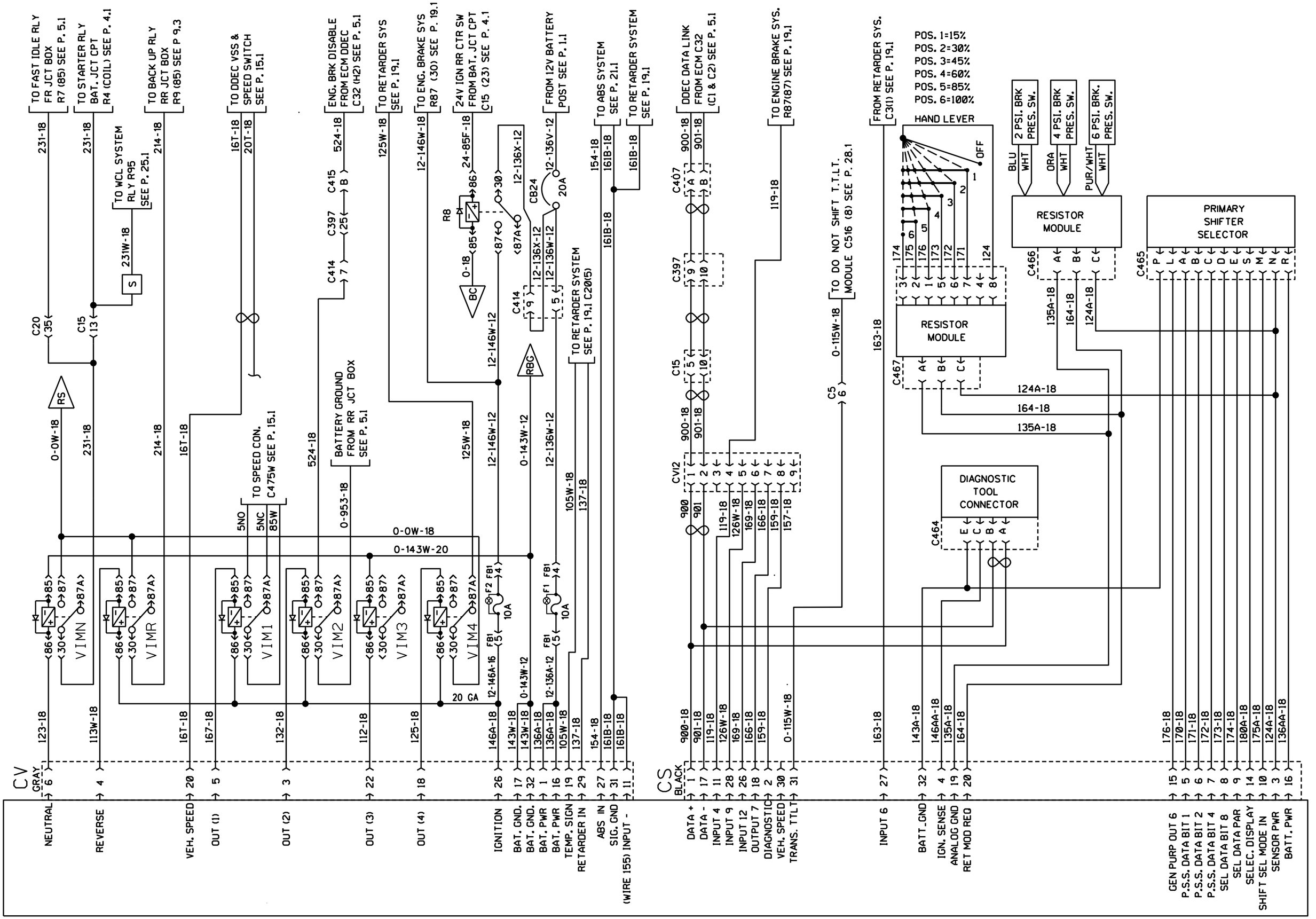

WORLD TRANSMISSION E.C.U.

PREVOST	WIRING DIAGRAM	NO: D060902	PAGE: 6.1	REVISION 00

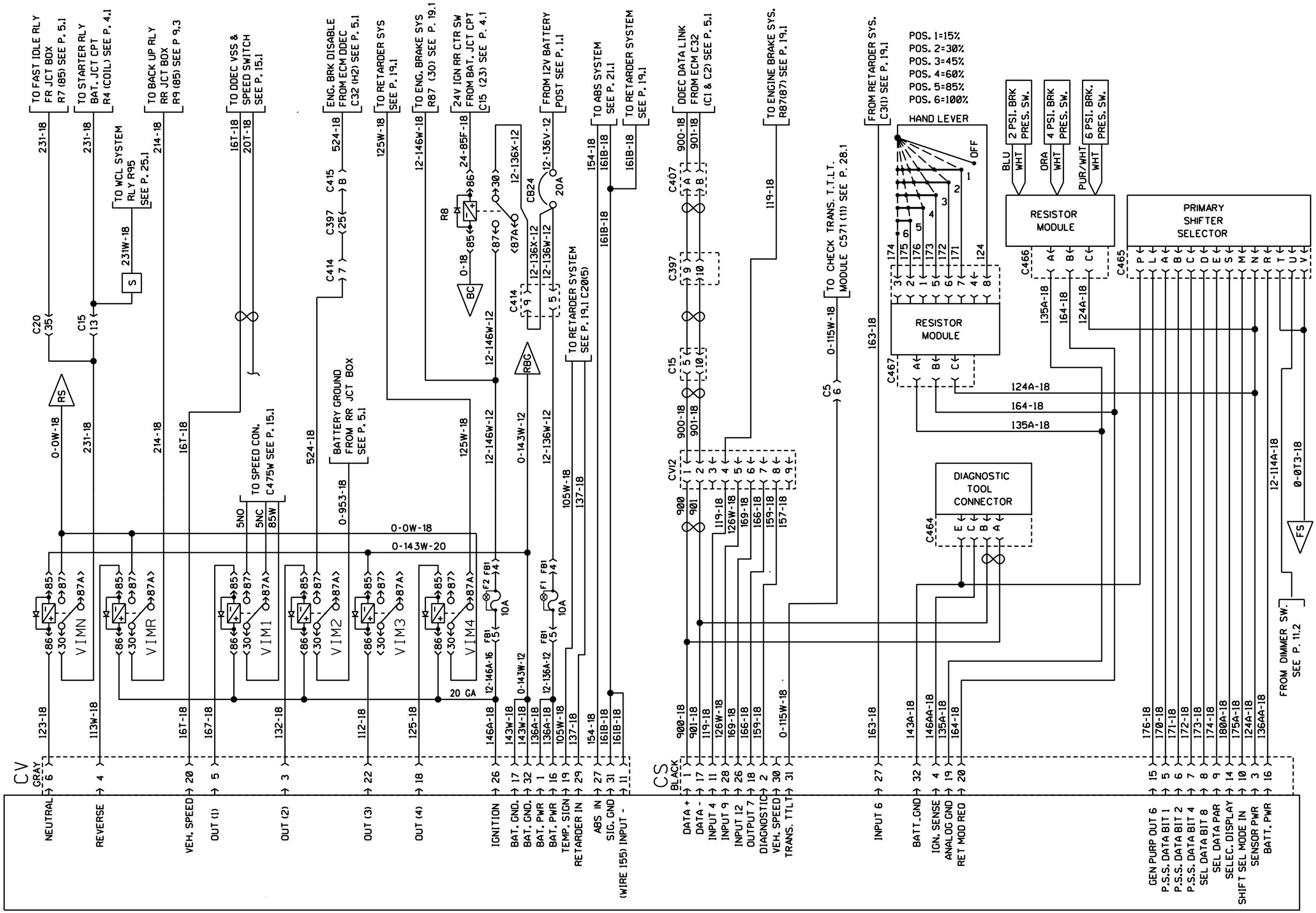

WORLD TRANSMISSION E.C.U.

PREVOST	WIRING DIAGRAM	NO: D060902	PAGE: 6.1	REVISION 01

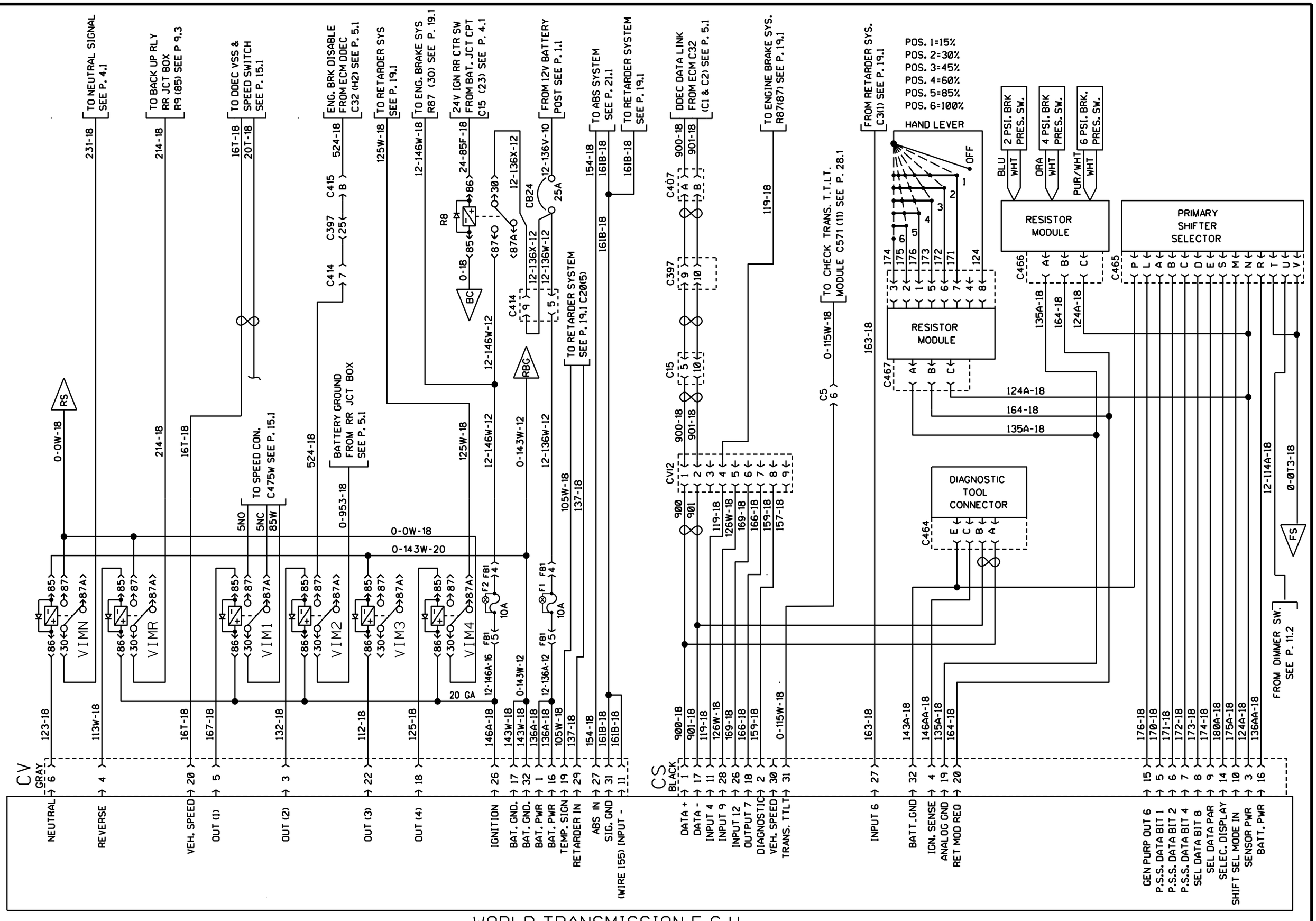

WORLD TRANSMISSION E.C.U.

PREVOST	WIRING DIAGRAM	NO: D060902	PAGE: 6.1	REVISION 08

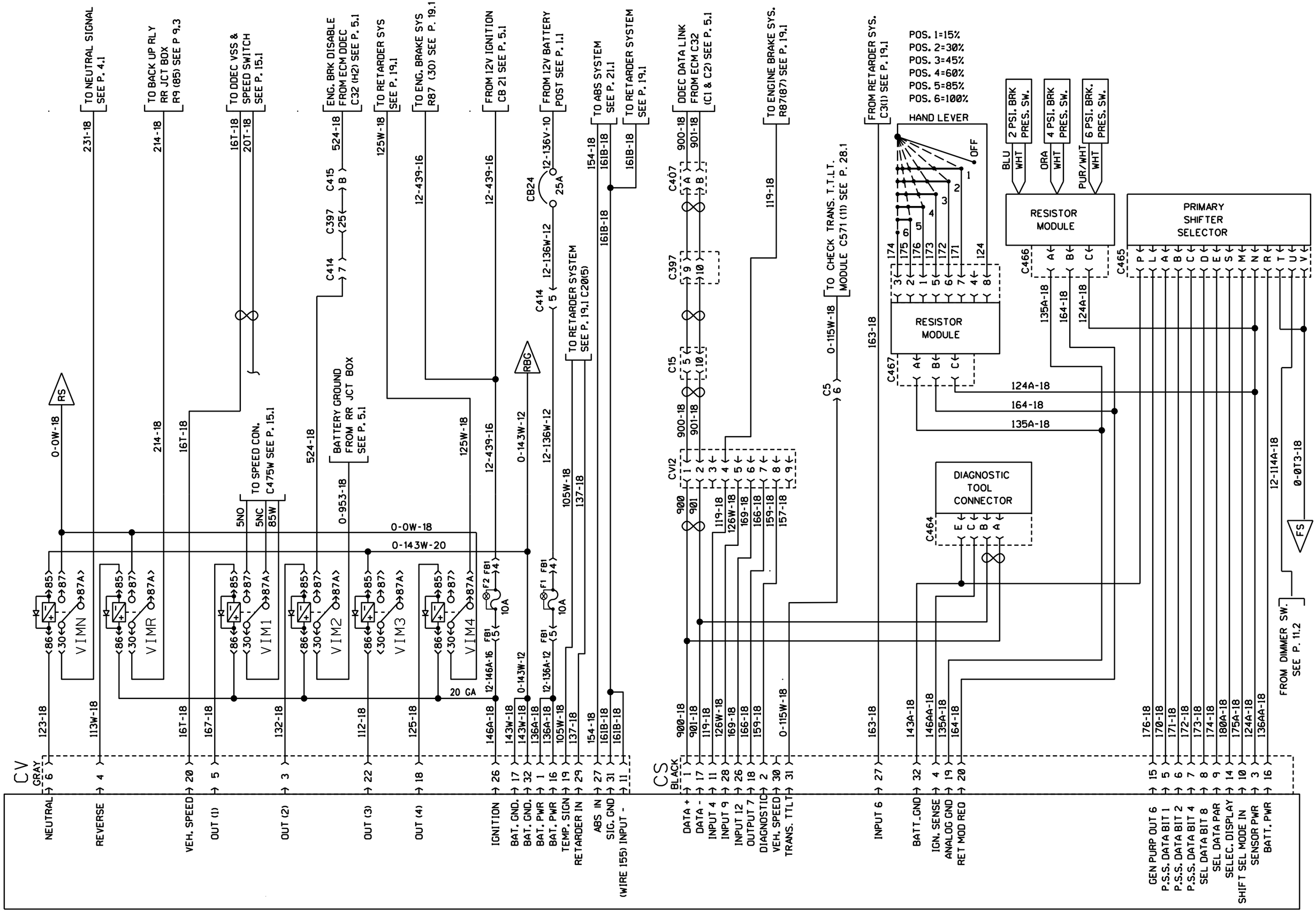

WORLD TRANSMISSION E.C.U.

PREVOST	WIRING DIAGRAM	NO: D060902	PAGE: 6.1	REVISION 09

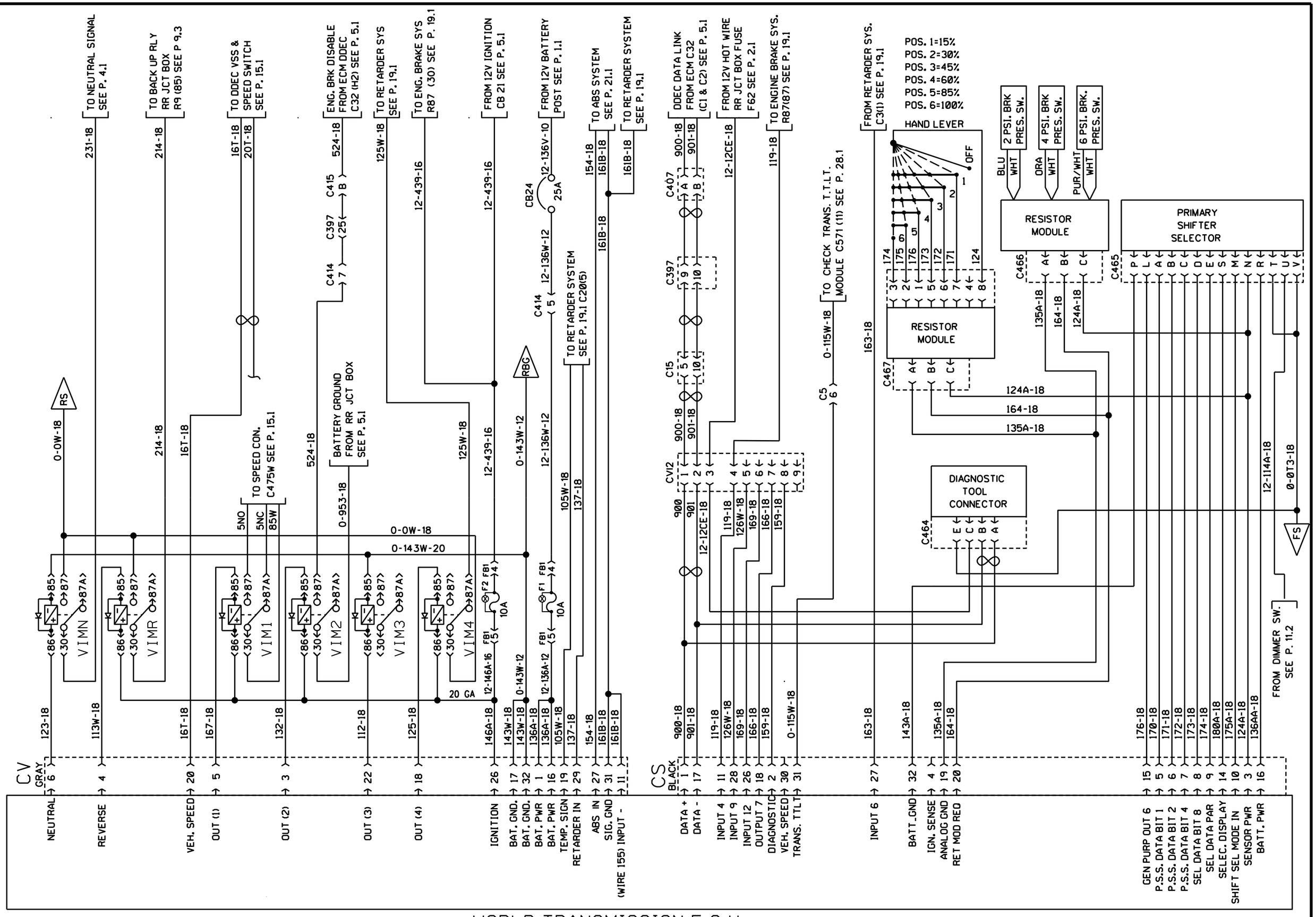

WORLD TRANSMISSION E.C.U.

PREVOST	WIRING DIAGRAM	NO: D060902	PAGE: 6.1	REVISION 16

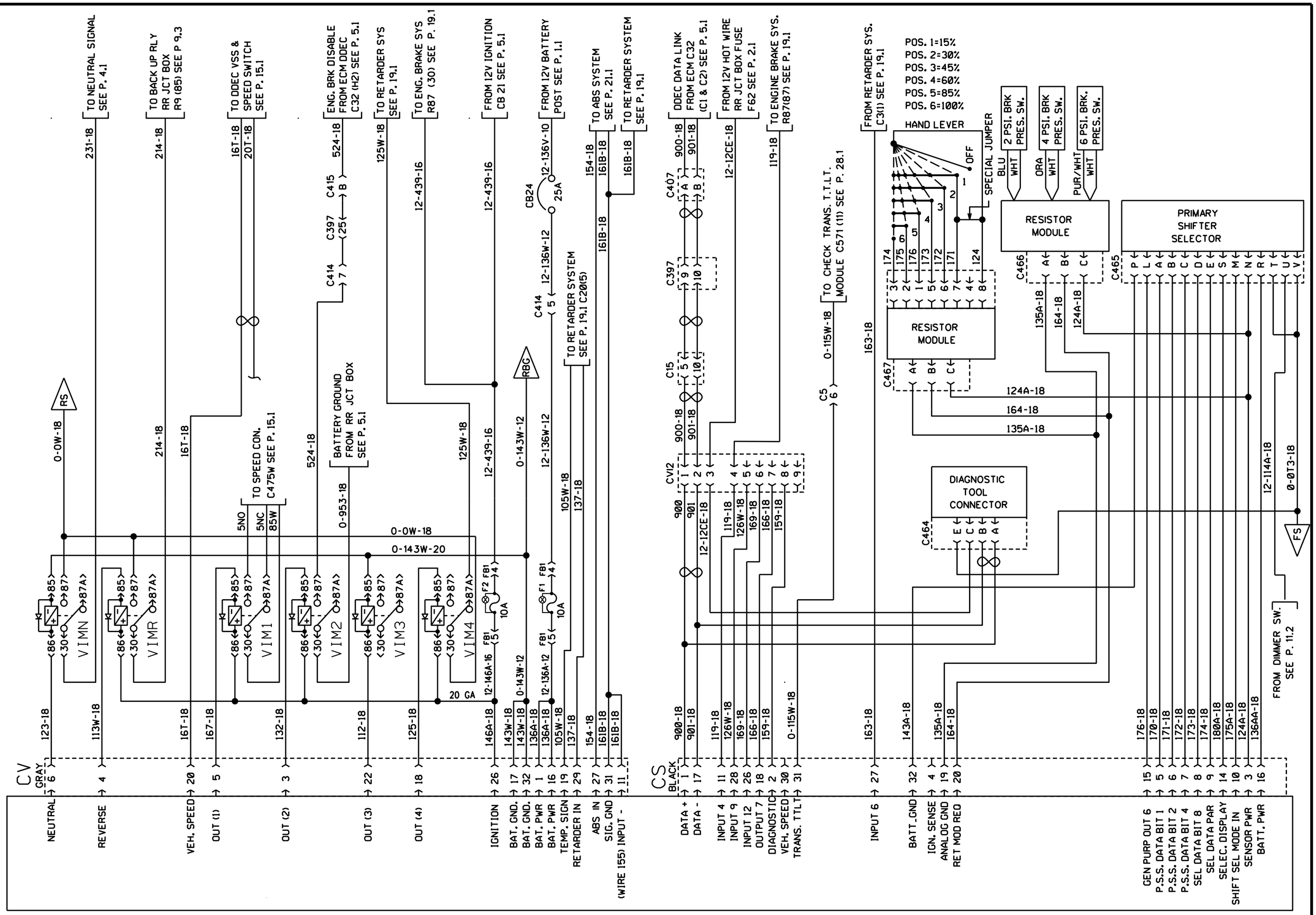

WORLD TRANSMISSION E.C.U.

PREVOST	WIRING DIAGRAM	NO: D060902	PAGE: 6.1sp1	REVISION 00

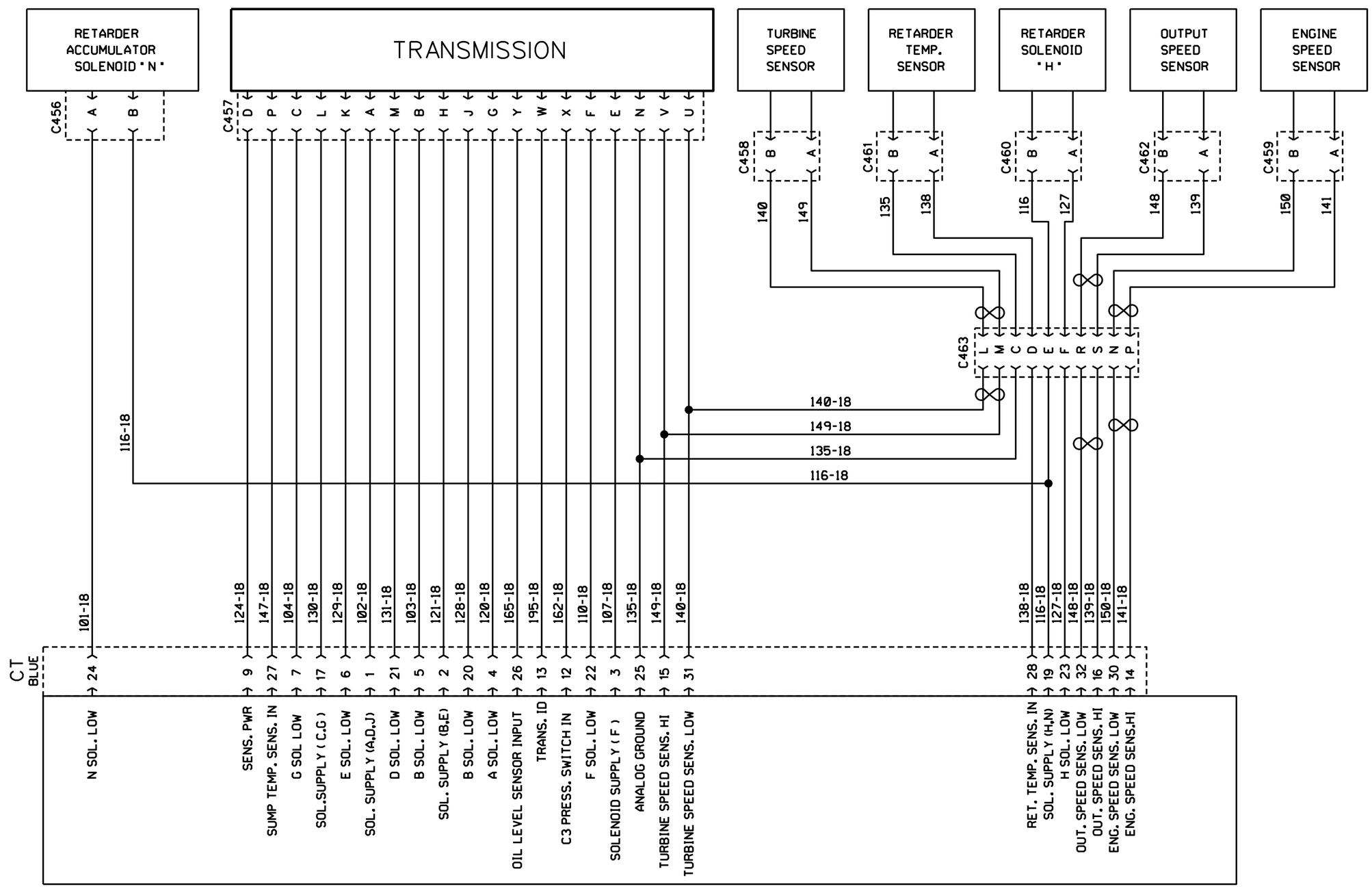

WORLD TRANSMISSION E.C.U. (SUITE)

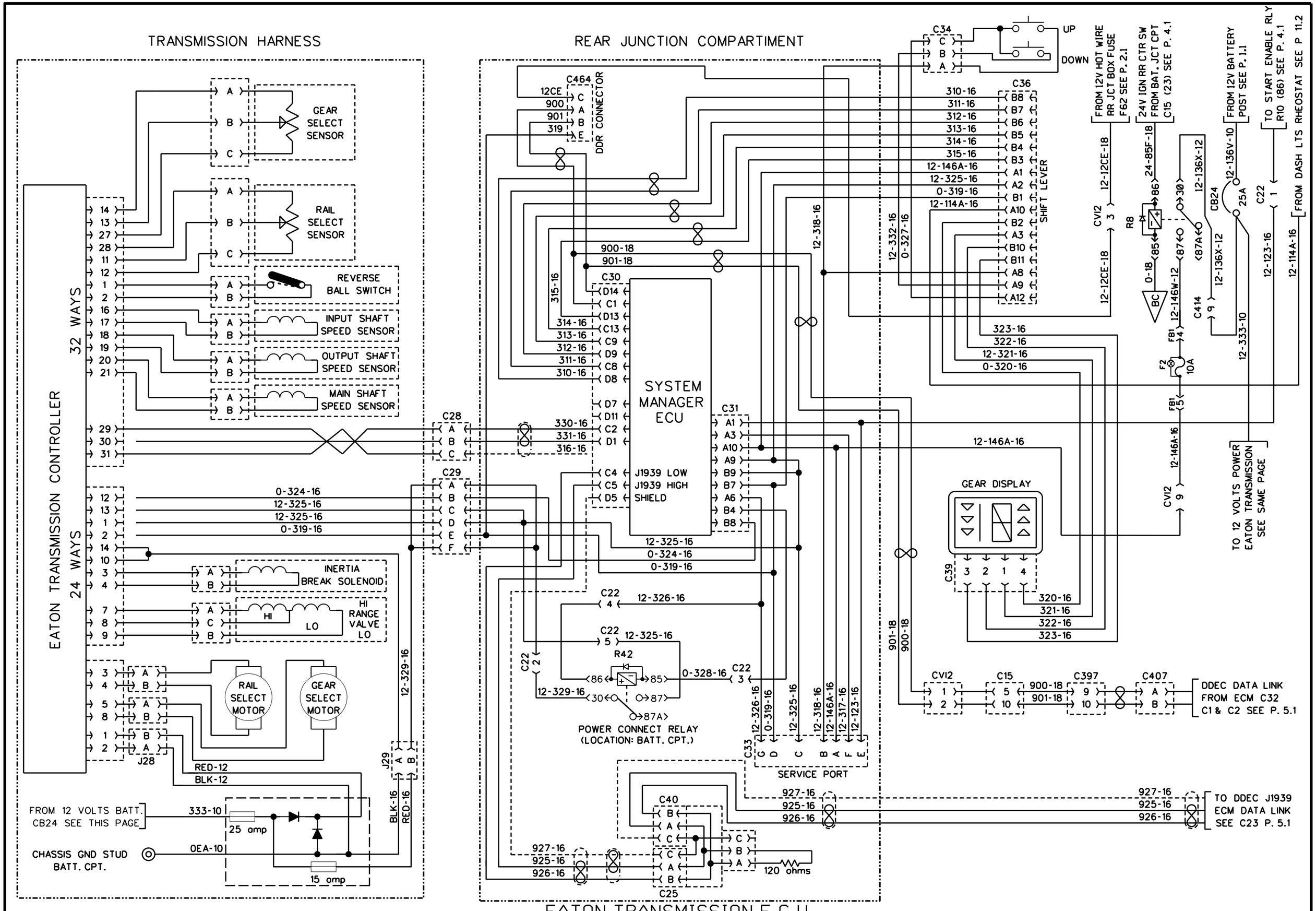

EATON TRANSMISSION E.C.U.

PREVOST	WIRING DIAGRAM	NO: D060902	PAGE: 6.3	REVISION 08

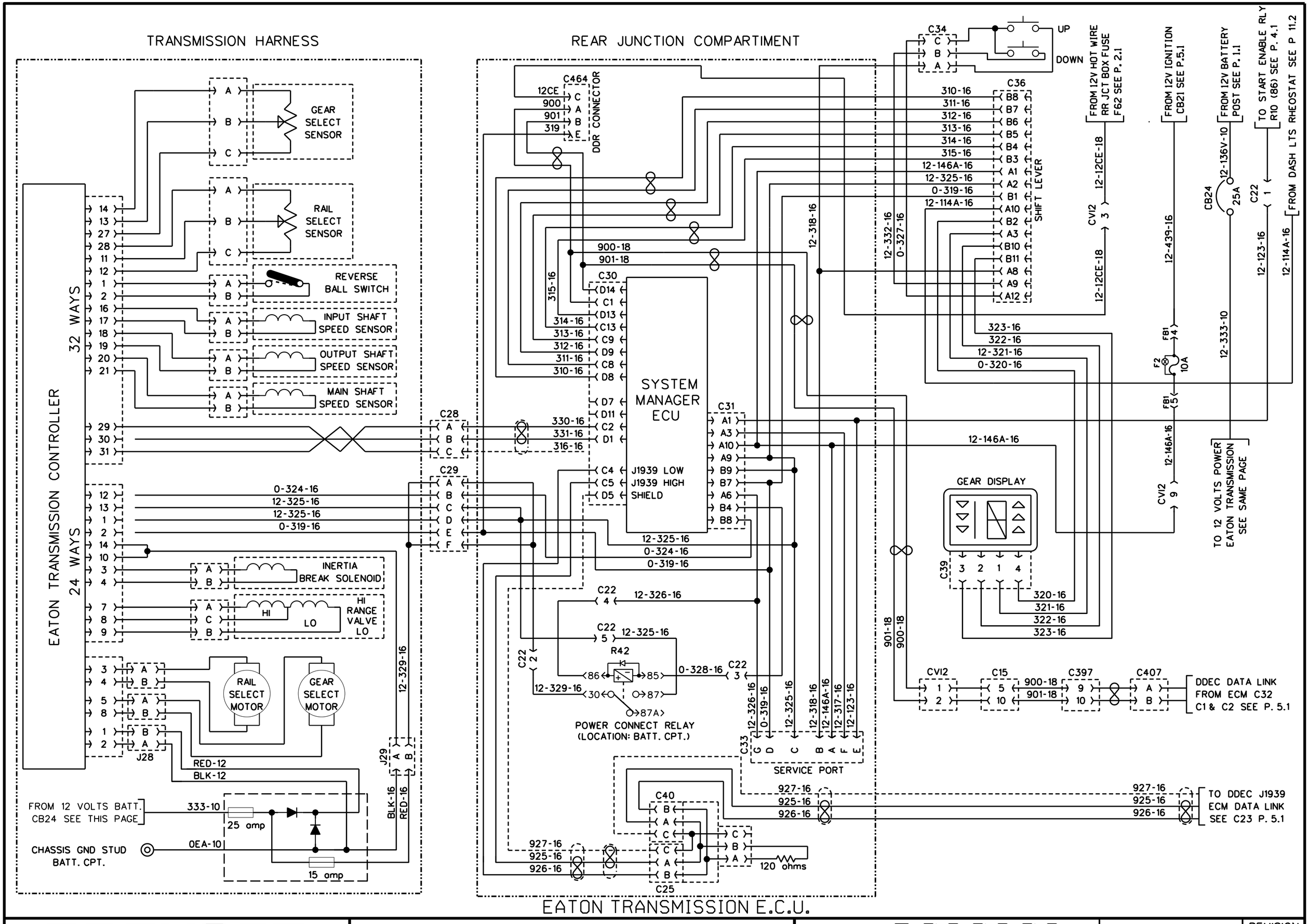

PREVOST	WIRING DIAGRAM	NO: D060902	PAGE: 6.3	REVISION 09

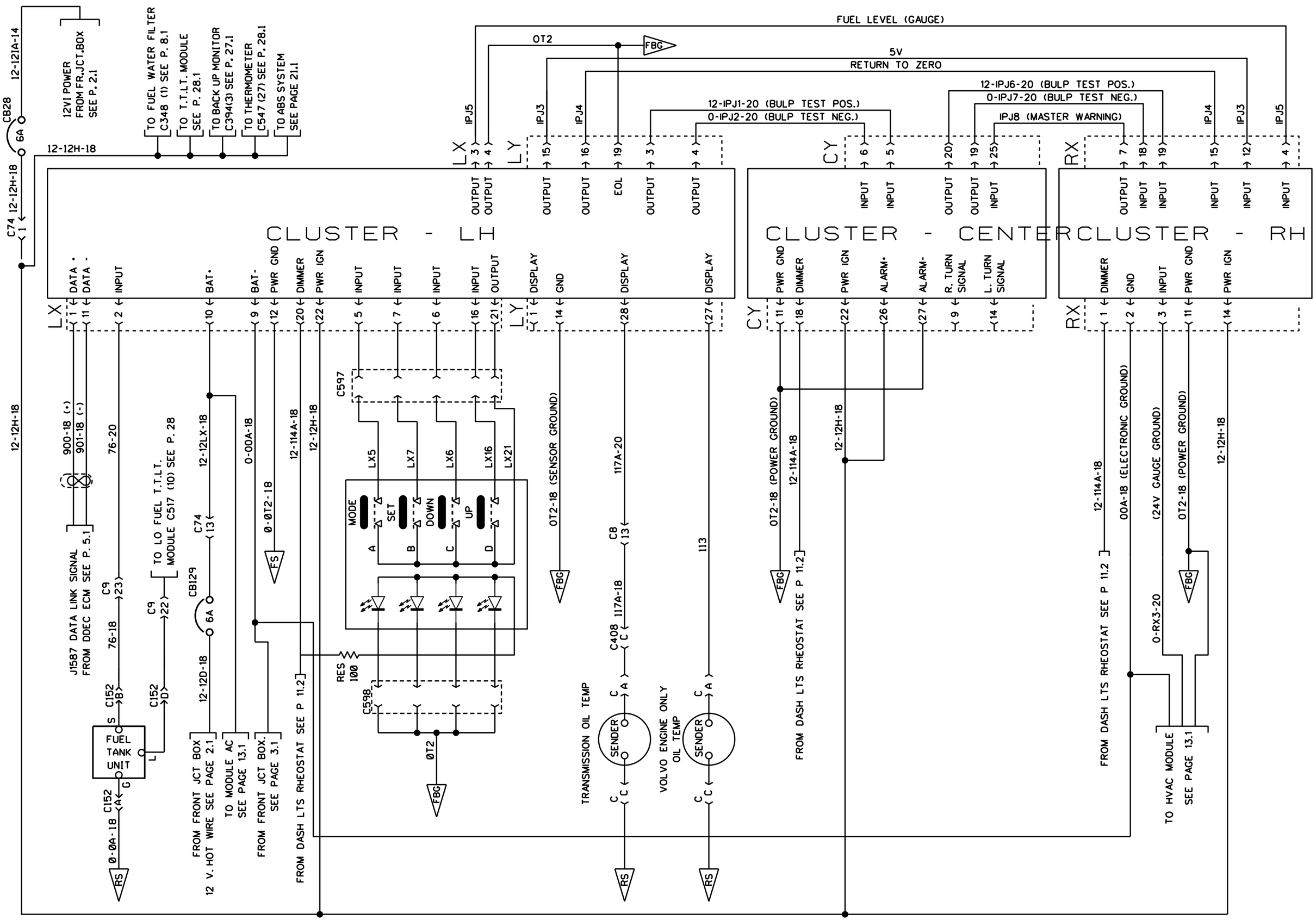

ALARM AND SIGNAL

PREVOST	WIRING DIAGRAM	NO: D060902	PAGE: 7.1	REVISION 00

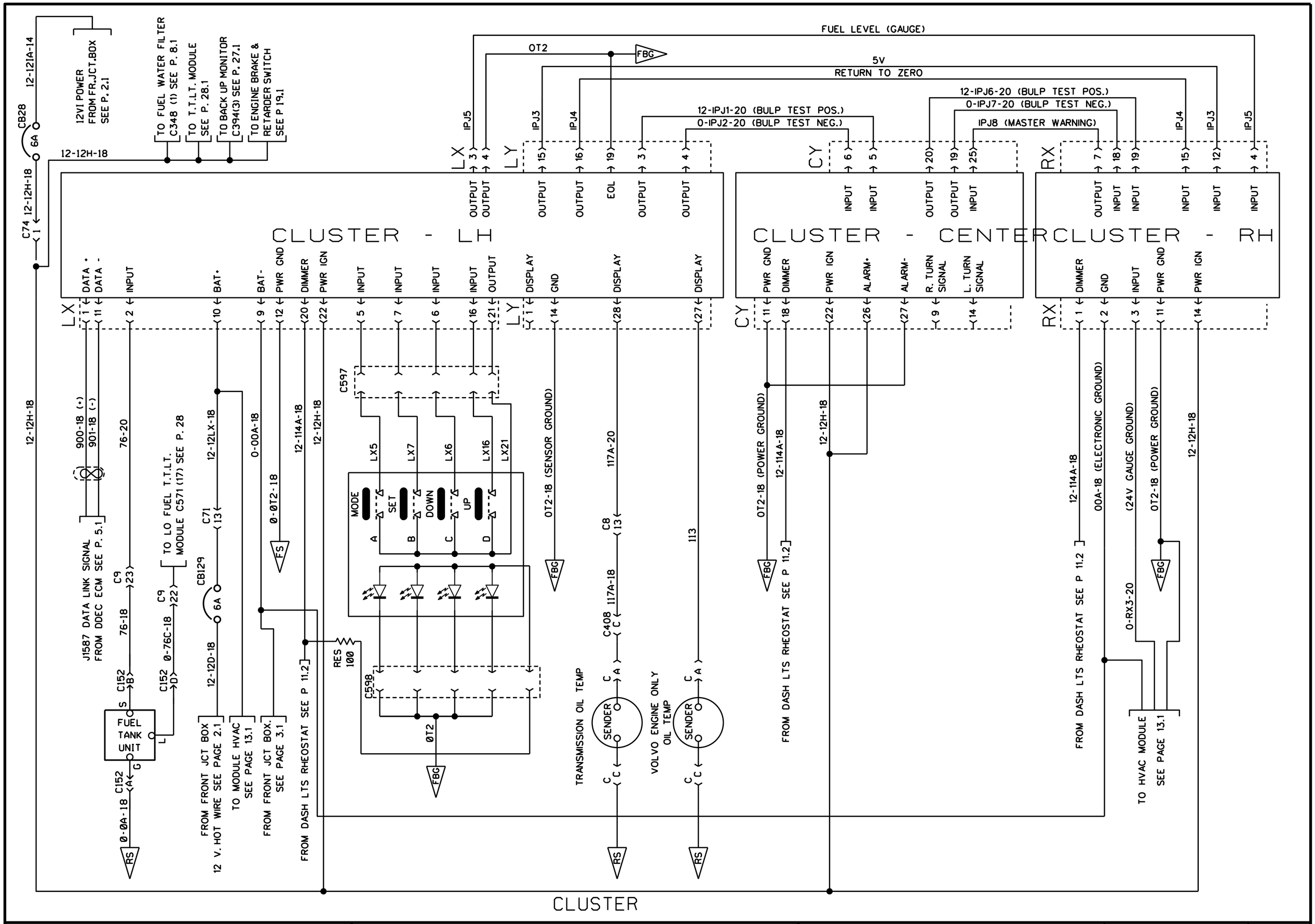

PREVOST	WIRING DIAGRAM	NO: D060902	PAGE: 7.1	REVISION 01

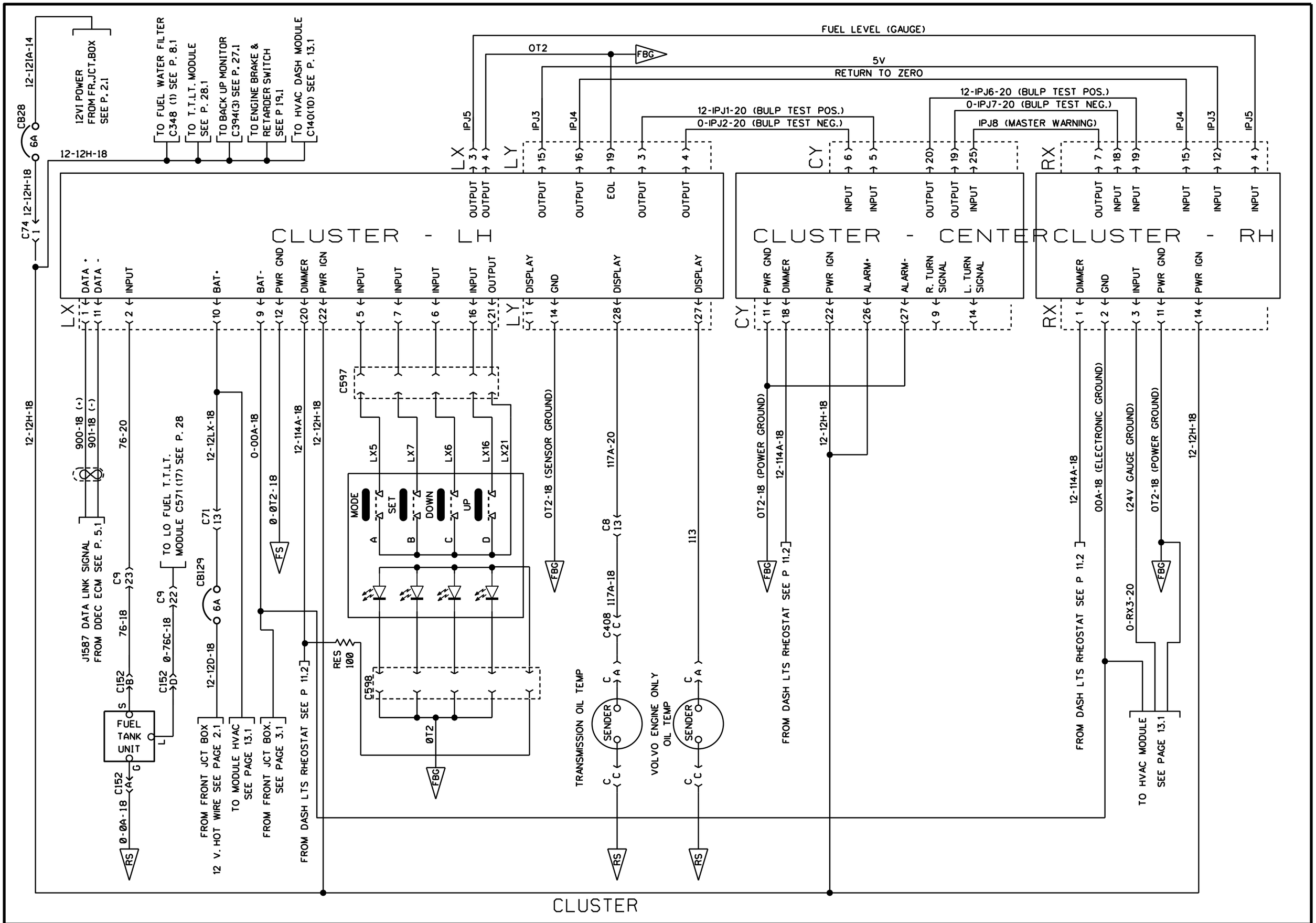
CLUSTER - LH
CLUSTER - CENTER
CLUSTER - RH
CLUSTER
12V1 POWER FROM FR.JCT.BOX SEE P. 2.1
TO FUEL WATER FILTER C348 (1) SEE P. 8.1
TO T.T.L.T. MODULE SEE P. 28.1
TO BACK UP MONITOR C394(3) SEE P. 27.1
TO ENGINE BRAKE & RETARDER SWITCH SEE P 19.1
TO HVAC DASH MODULE C140(10) SEE P. 13.1
FUEL LEVEL (GAUGE)
OT2
FBG
5V
RETURN TO ZERO
12-IPJ6-20 (BULP TEST POS.)
0-IPJ7-20 (BULP TEST NEG.)
IPJ8 (MASTER WARNING)
12-IPJ1-20 (BULP TEST POS.)
0-IPJ2-20 (BULP TEST NEG.)
J1587 DATA LINK SIGNAL FROM DDEC ECM SEE P. 5.1
TO LO FUEL T.T.L.T. MODULE C571 (17) SEE P. 28
FUEL TANK UNIT
FROM FRONT JCT BOX 12 V. HOT WIRE SEE PAGE 2.1
TO MODULE HVAC SEE PAGE 13.1
FROM FRONT JCT BOX. SEE PAGE 3.1
FROM DASH LTS RHEOSTAT SEE P 11.2
MODE
SET
DOWN
UP
RES 100
OT2-18 (SENSOR GROUND)
TRANSMISSION OIL TEMP
SENDER
VOLVO ENGINE ONLY OIL TEMP
OT2-18 (POWER GROUND)
FROM DASH LTS RHEOSTAT SEE P 11.2
00A-18 (ELECTRONIC GROUND)
(24V GAUGE GROUND)
OT2-18 (POWER GROUND)
TO HVAC MODULE SEE PAGE 13.1

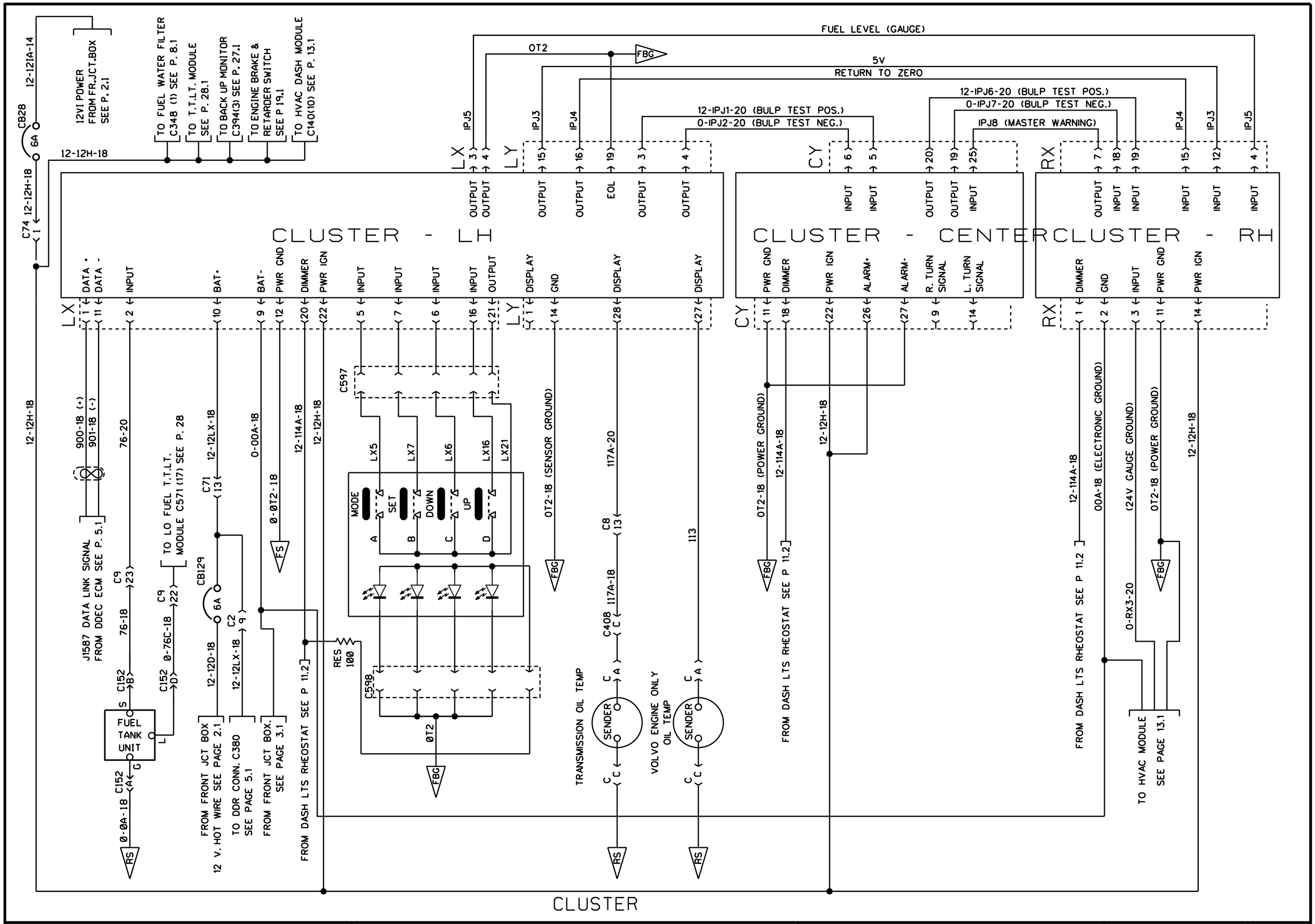

PREVOST	WIRING DIAGRAM	NO: D060902	PAGE: 7.1	REVISION 08

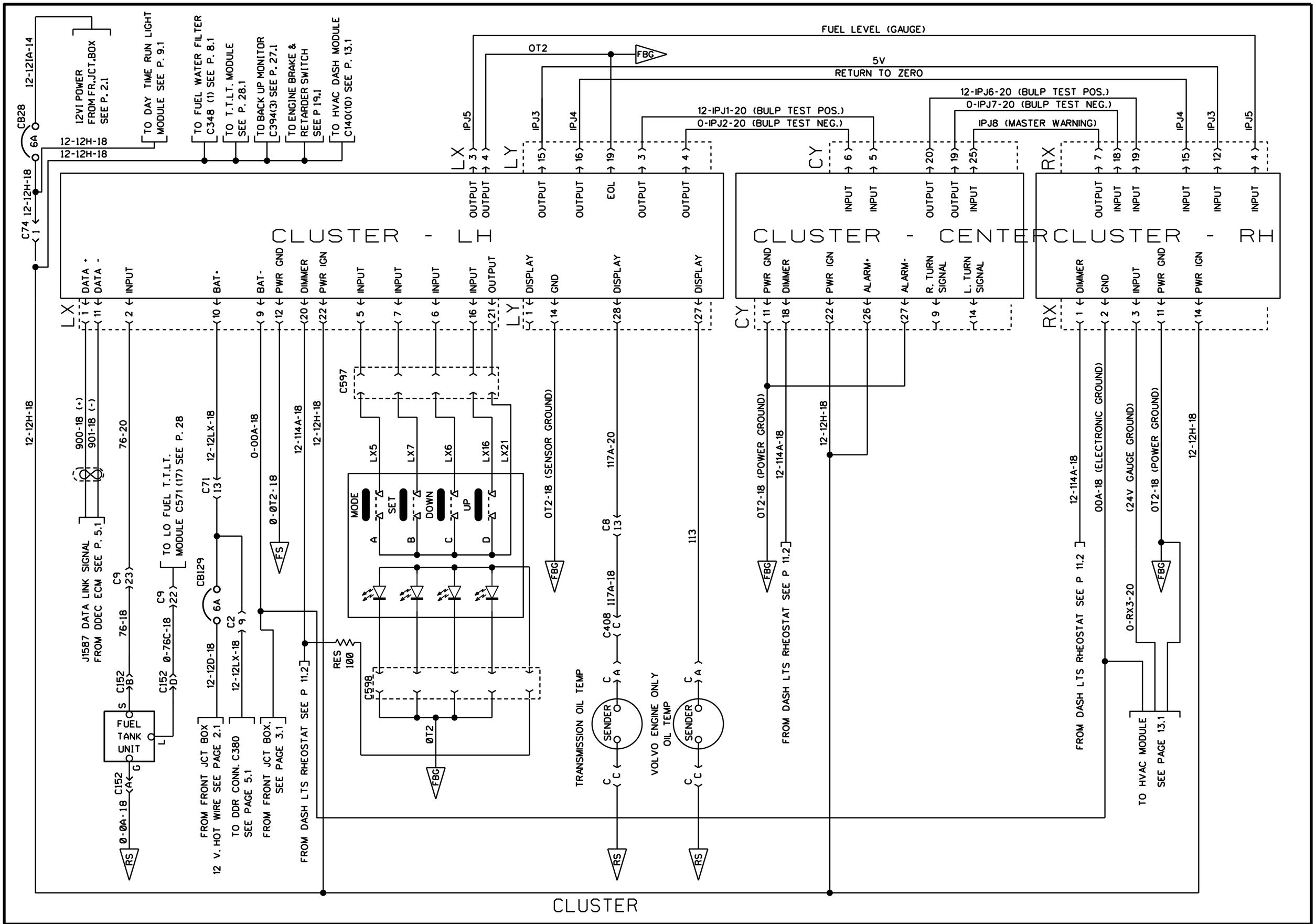

PREVOST	WIRING DIAGRAM	NO: D060902	PAGE: 7.1	REVISION 16

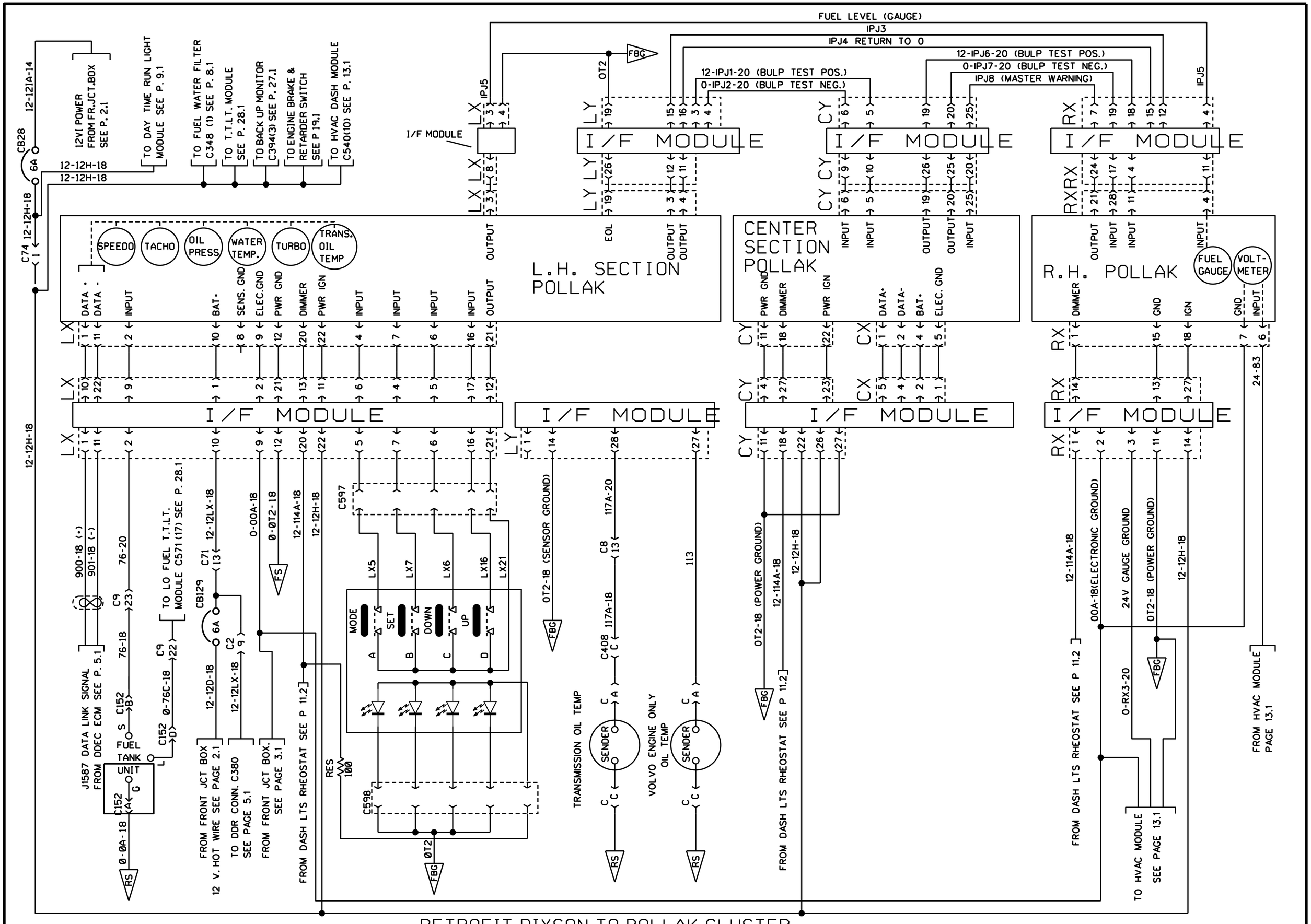

RETROFIT DIXSON TO POLLAK CLUSTER

PREVOST	WIRING DIAGRAM	NO: D060902	PAGE: 7.1 SP1	REVISION 16

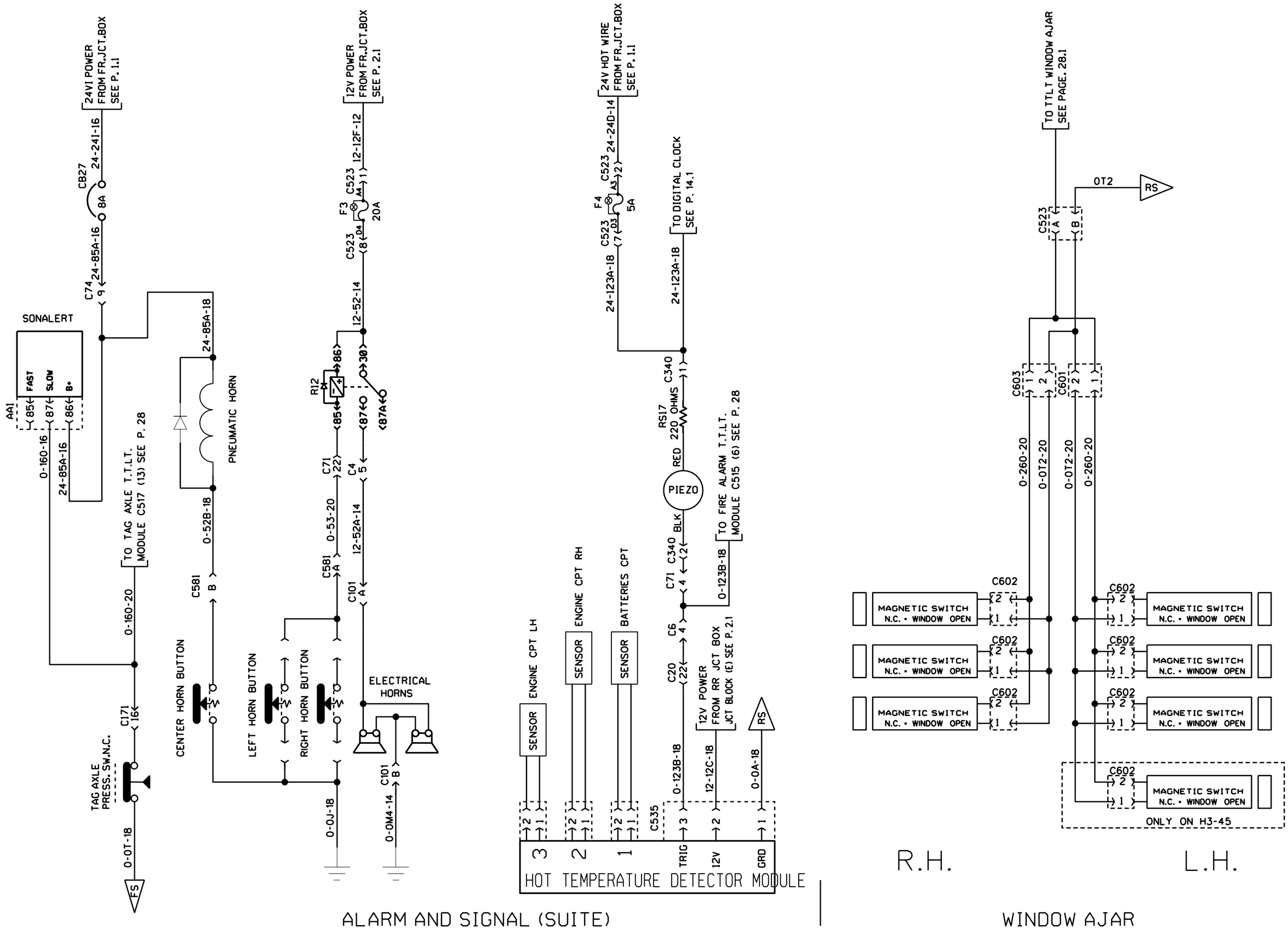

PREVOST	WIRING DIAGRAM	NO: D060902	PAGE: 7.2	REVISION 00

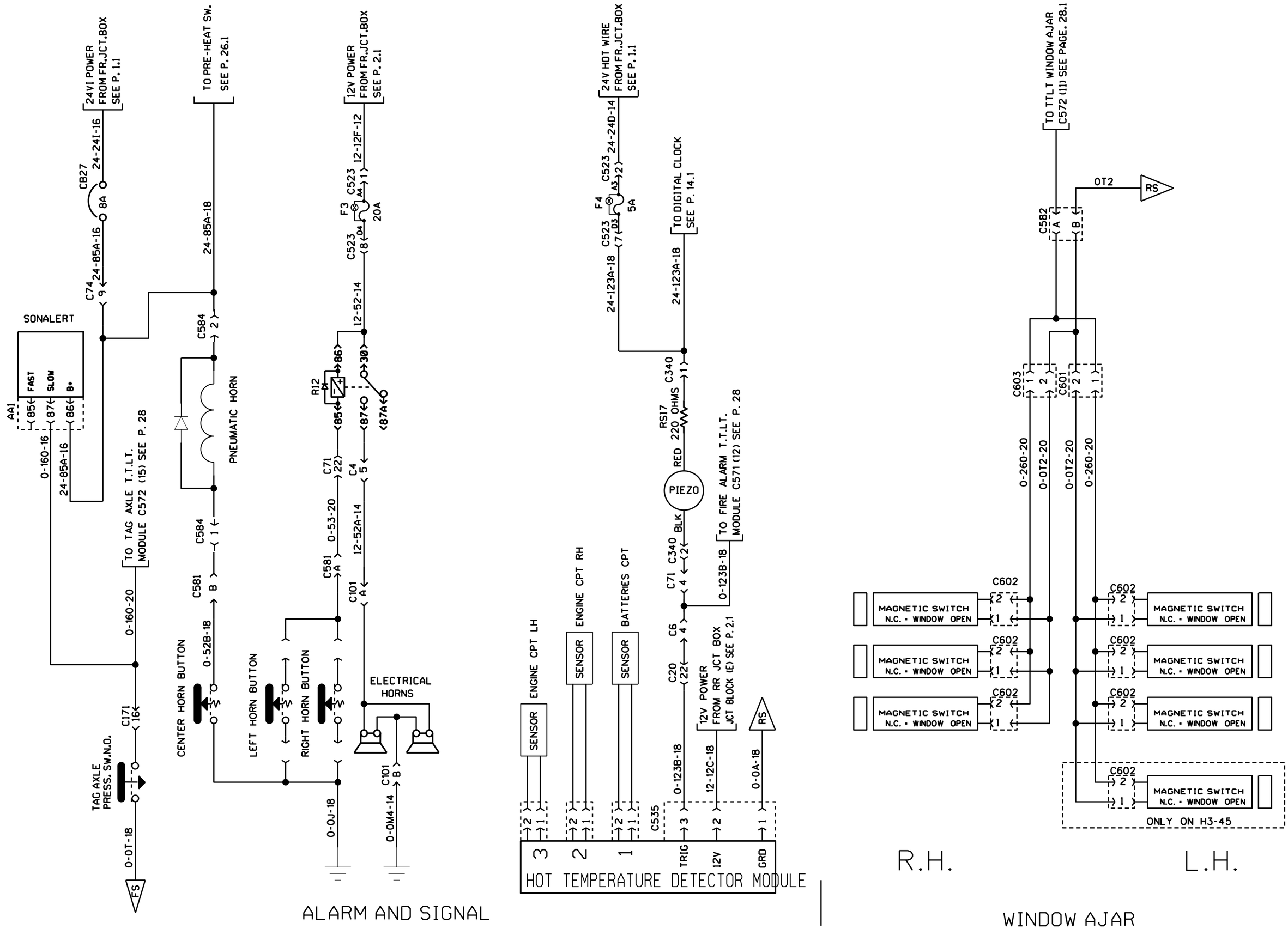

PREVOST	WIRING DIAGRAM	NO: D060902	PAGE: 7.2	REVISION 01

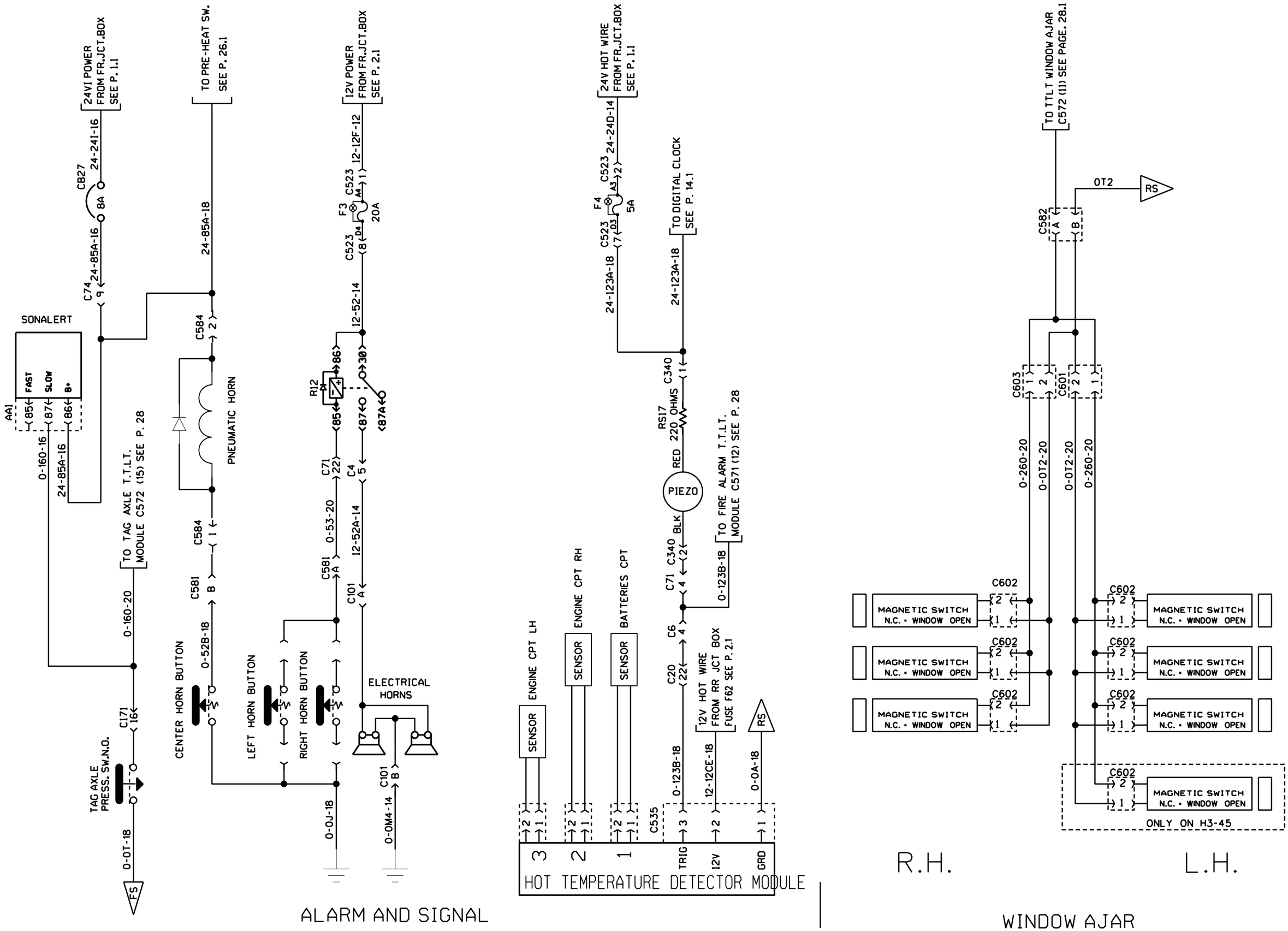

PREVOST	WIRING DIAGRAM	NO: D060902	PAGE: 7.2	REVISION 08

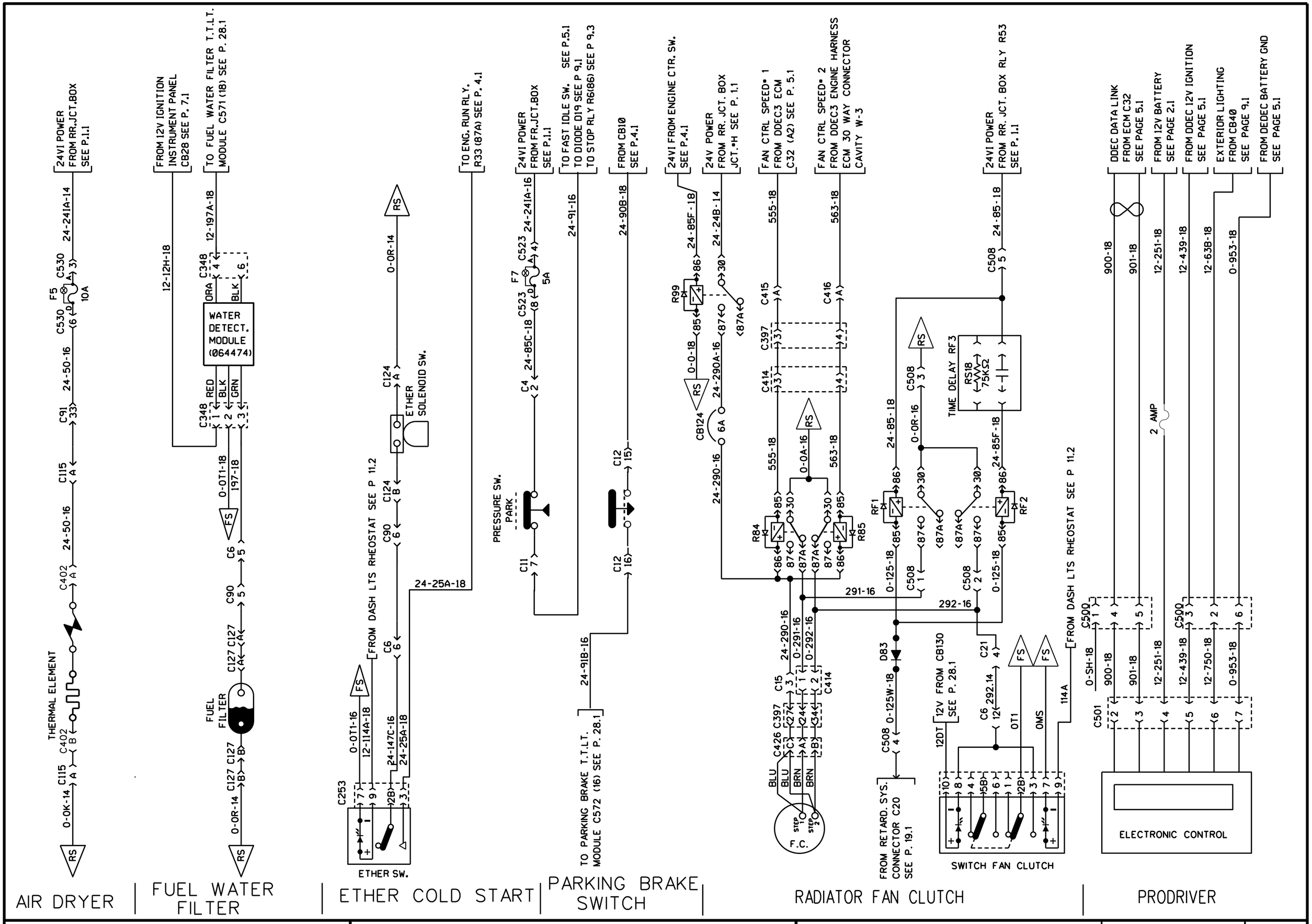

PREVOST	WIRING DIAGRAM	NO: D060902	PAGE: 8.1	REVISION 00

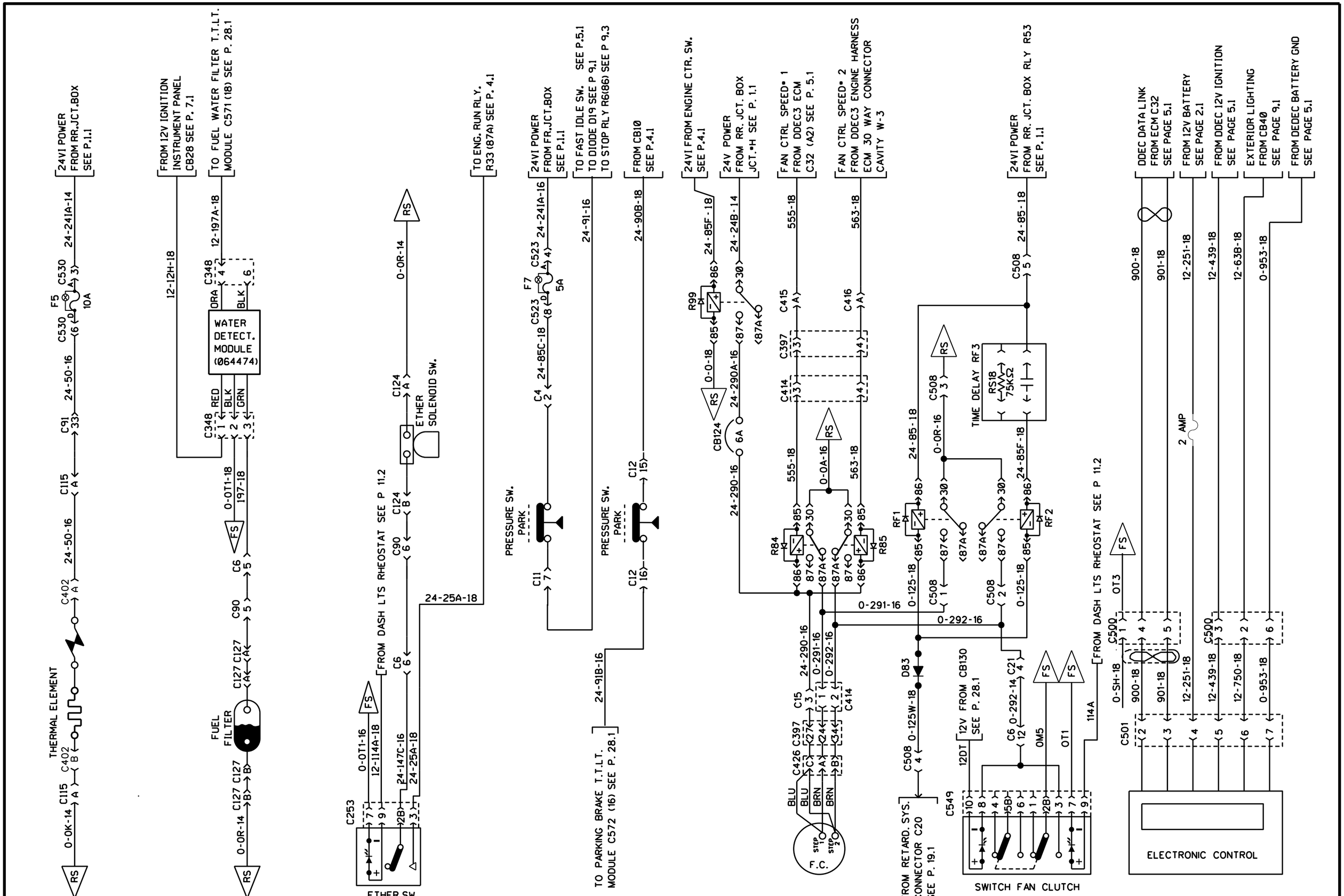

PREVOST	WIRING DIAGRAM	NO: D060902	PAGE: 8.1	REVISION 01

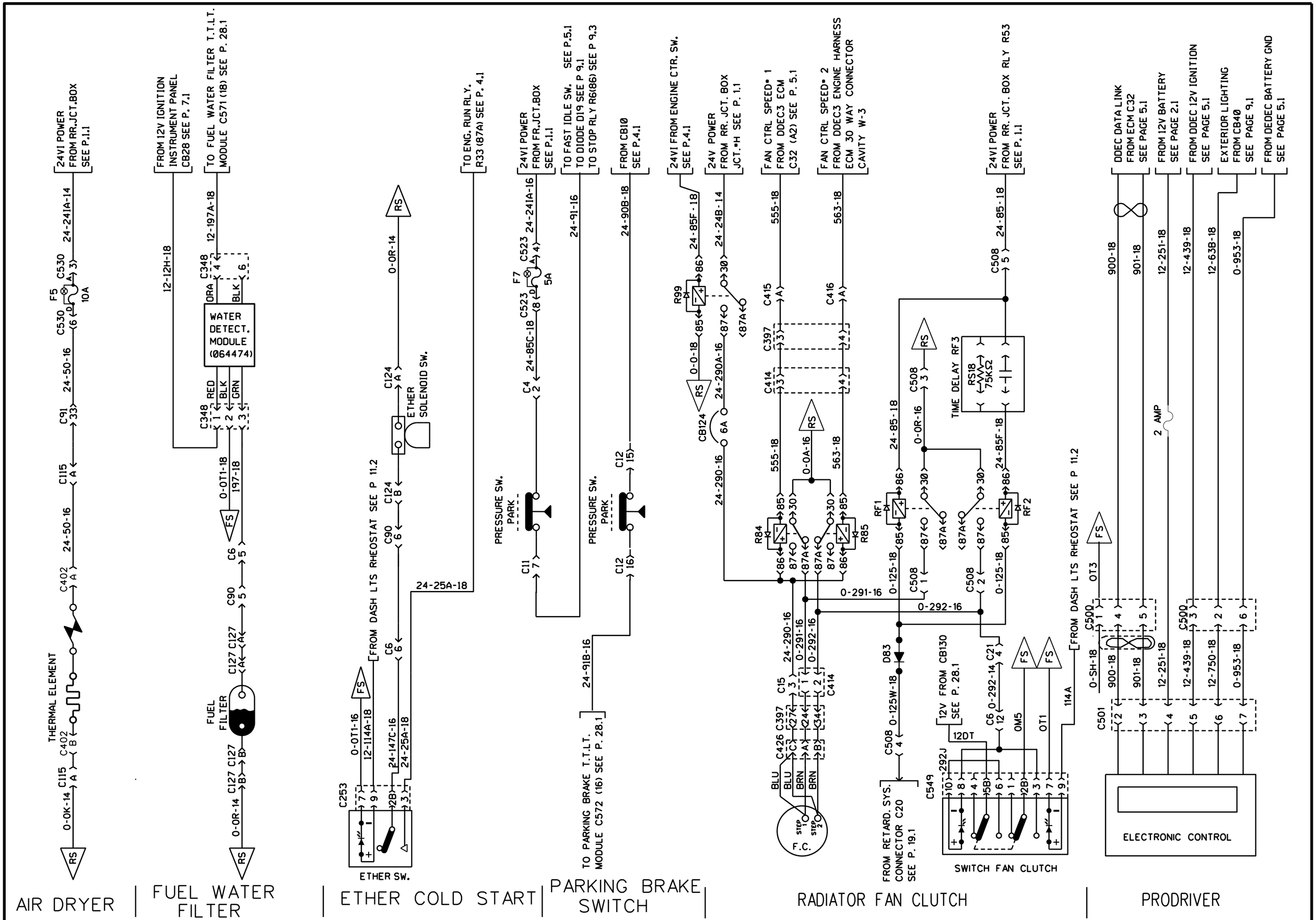

PREVOST	WIRING DIAGRAM	NO: D060902	PAGE: 8.1	REVISION 07

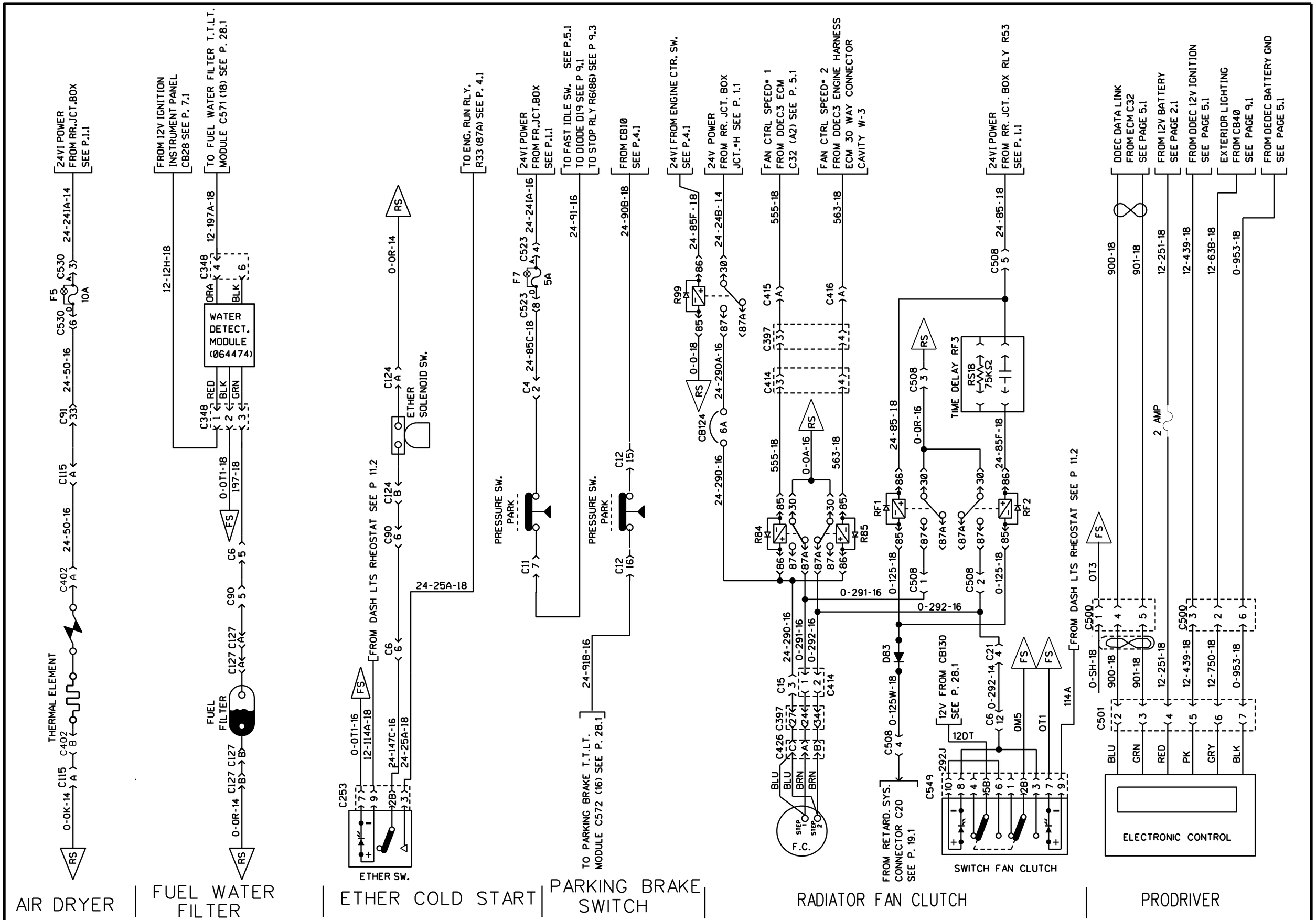

PREVOST	WIRING DIAGRAM	NO: D060902	PAGE: 8.1	REVISION 08

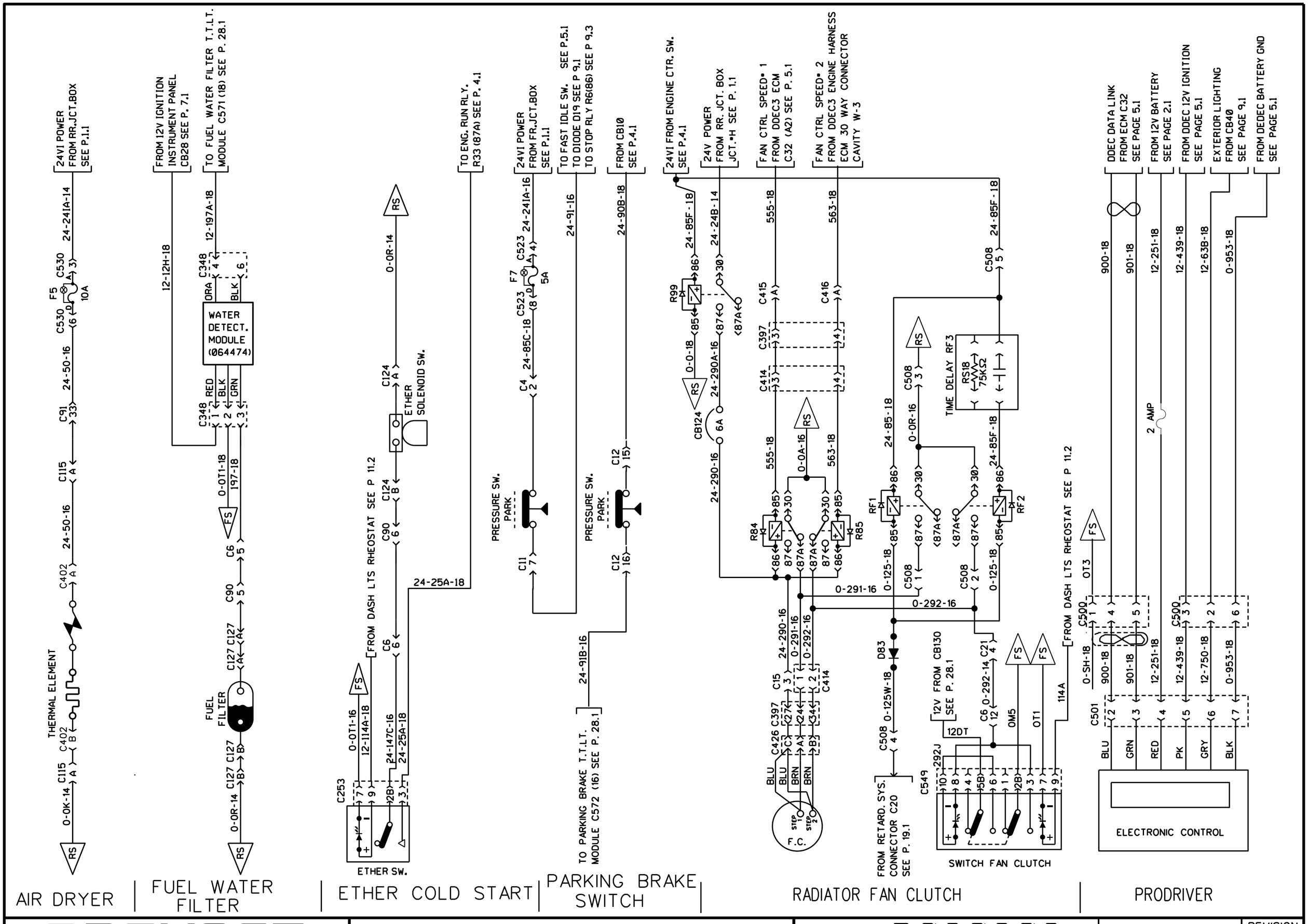

PREVOST	WIRING DIAGRAM	NO: D060902	PAGE: 8.1	REVISION 09

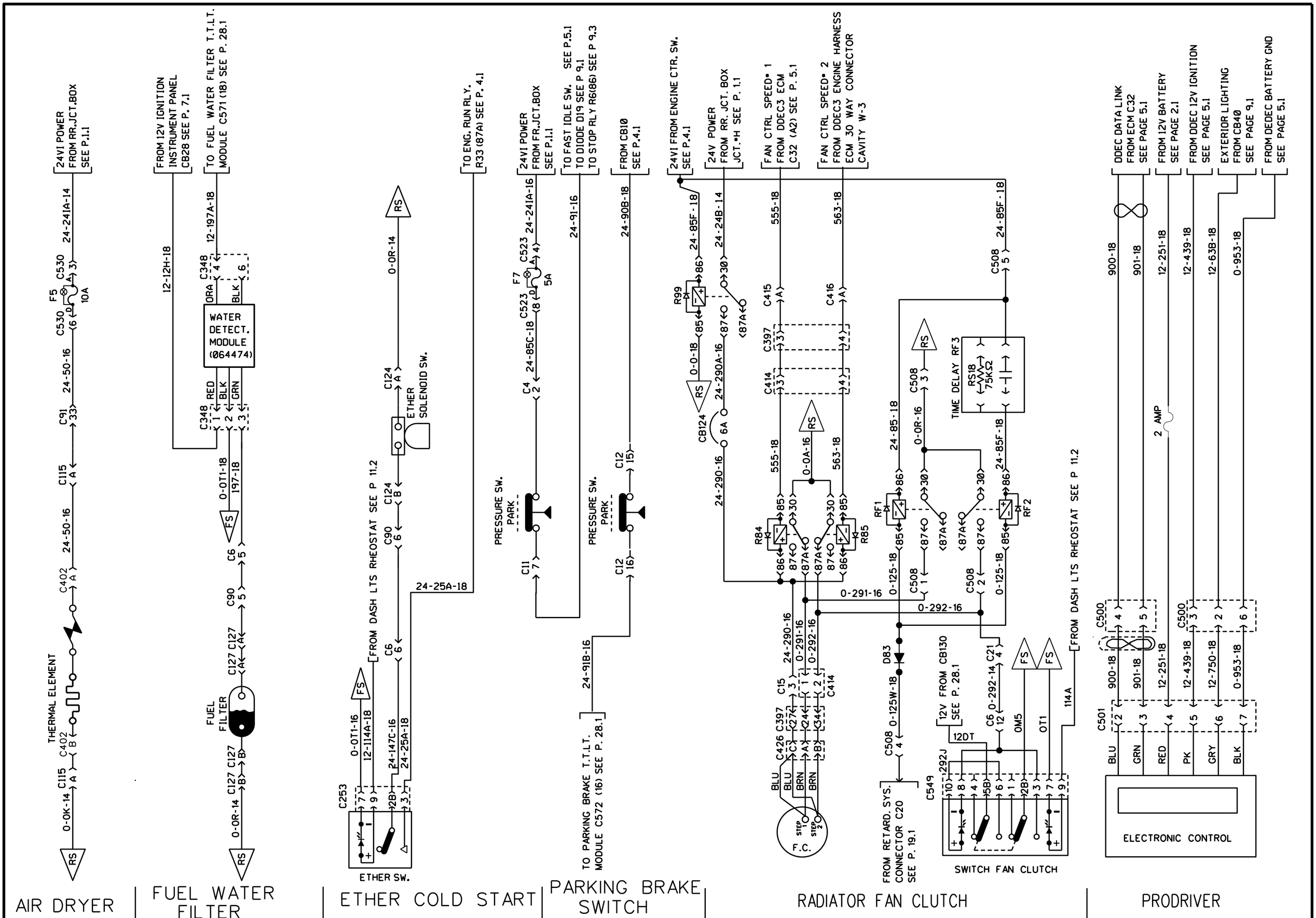

PREVOST	WIRING DIAGRAM	NO: D060902	PAGE: 8.1	REVISION 12

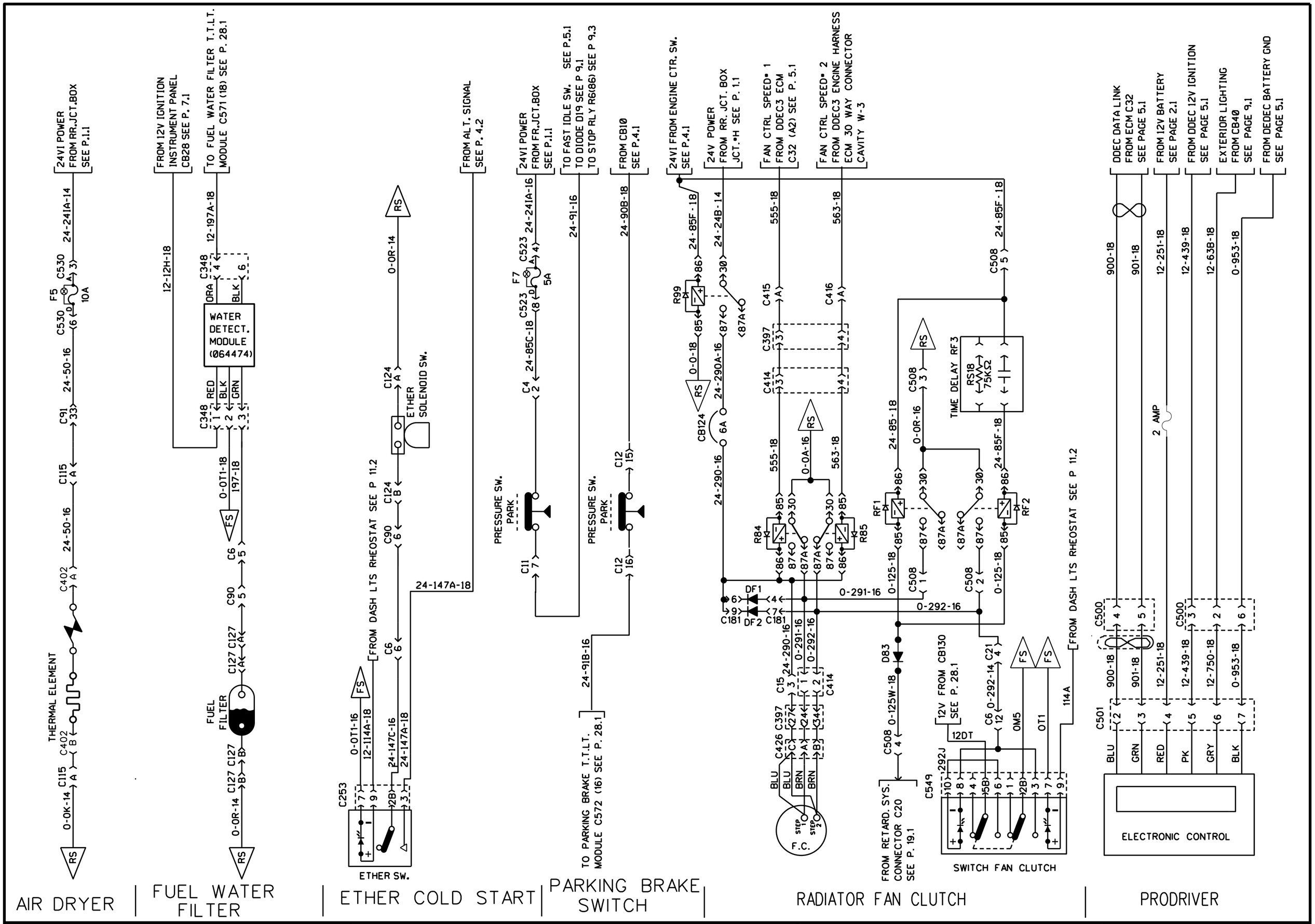

PREVOST	WIRING DIAGRAM	NO: D060902	PAGE: 8.1	REVISION 16

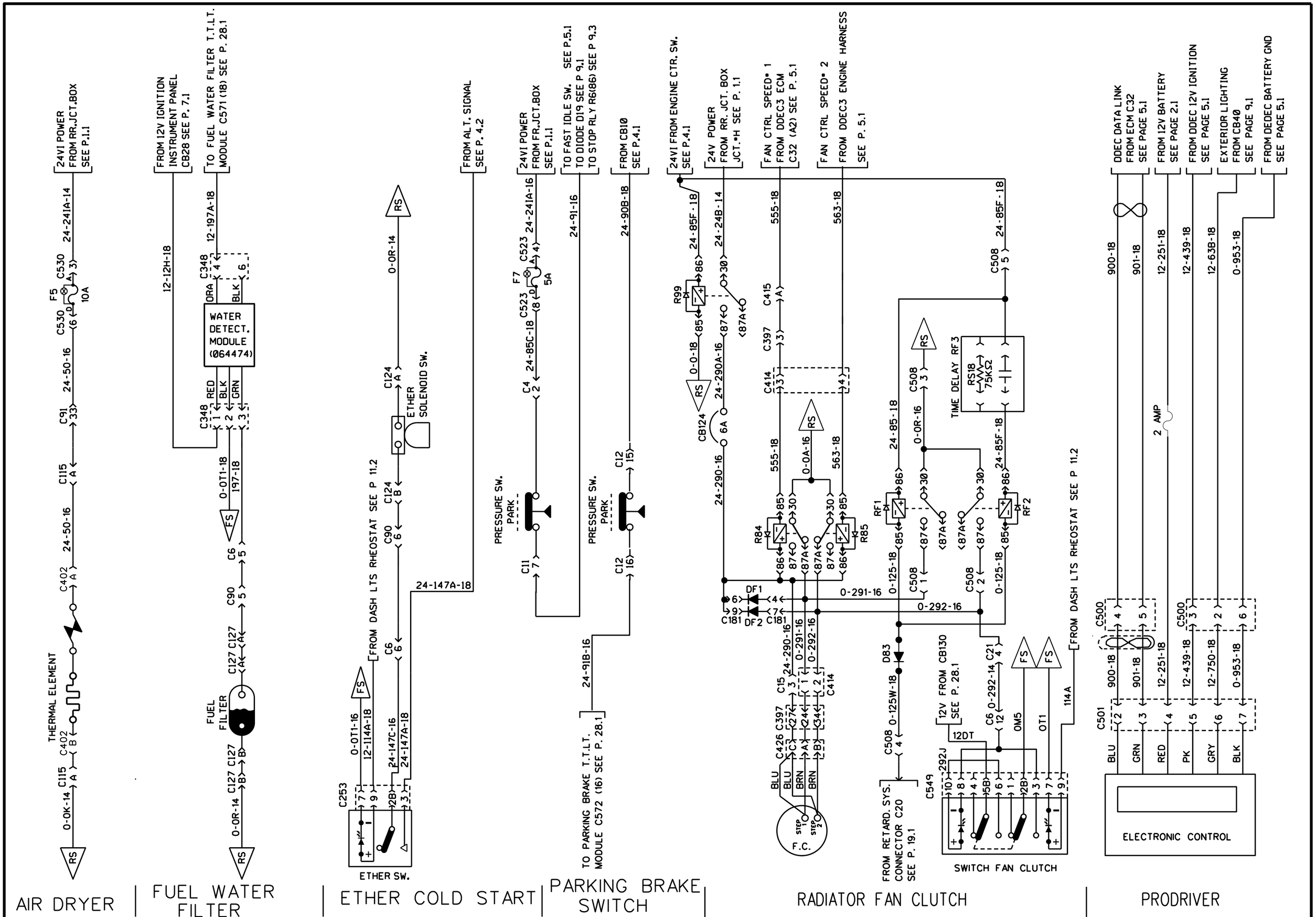

PREVOST	WIRING DIAGRAM	NO: D060902	PAGE: 8.1	REVISION 24

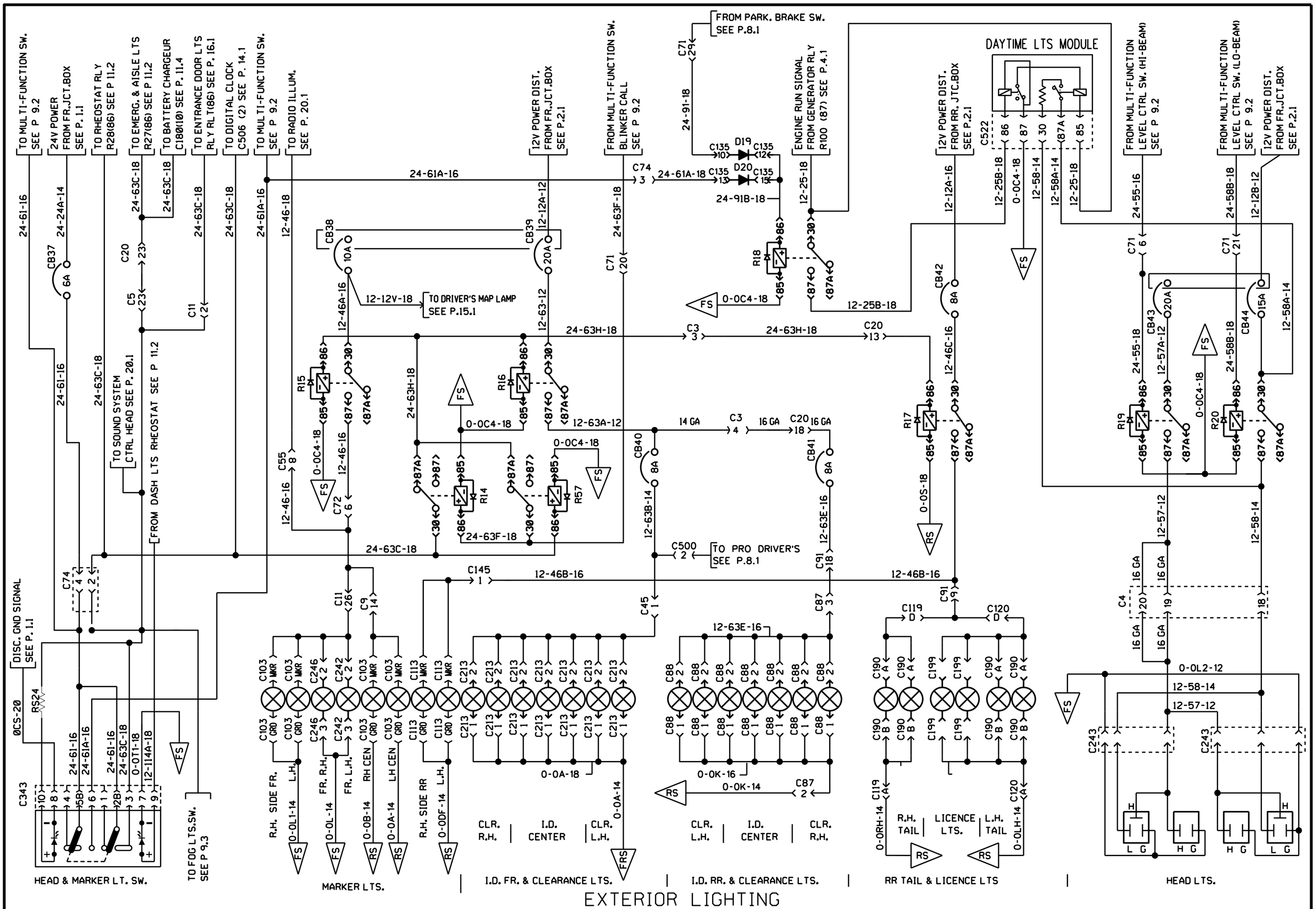

EXTERIOR LIGHTING

PREVOST	WIRING DIAGRAM	NO: D060902	PAGE: 9.1	REVISION 00

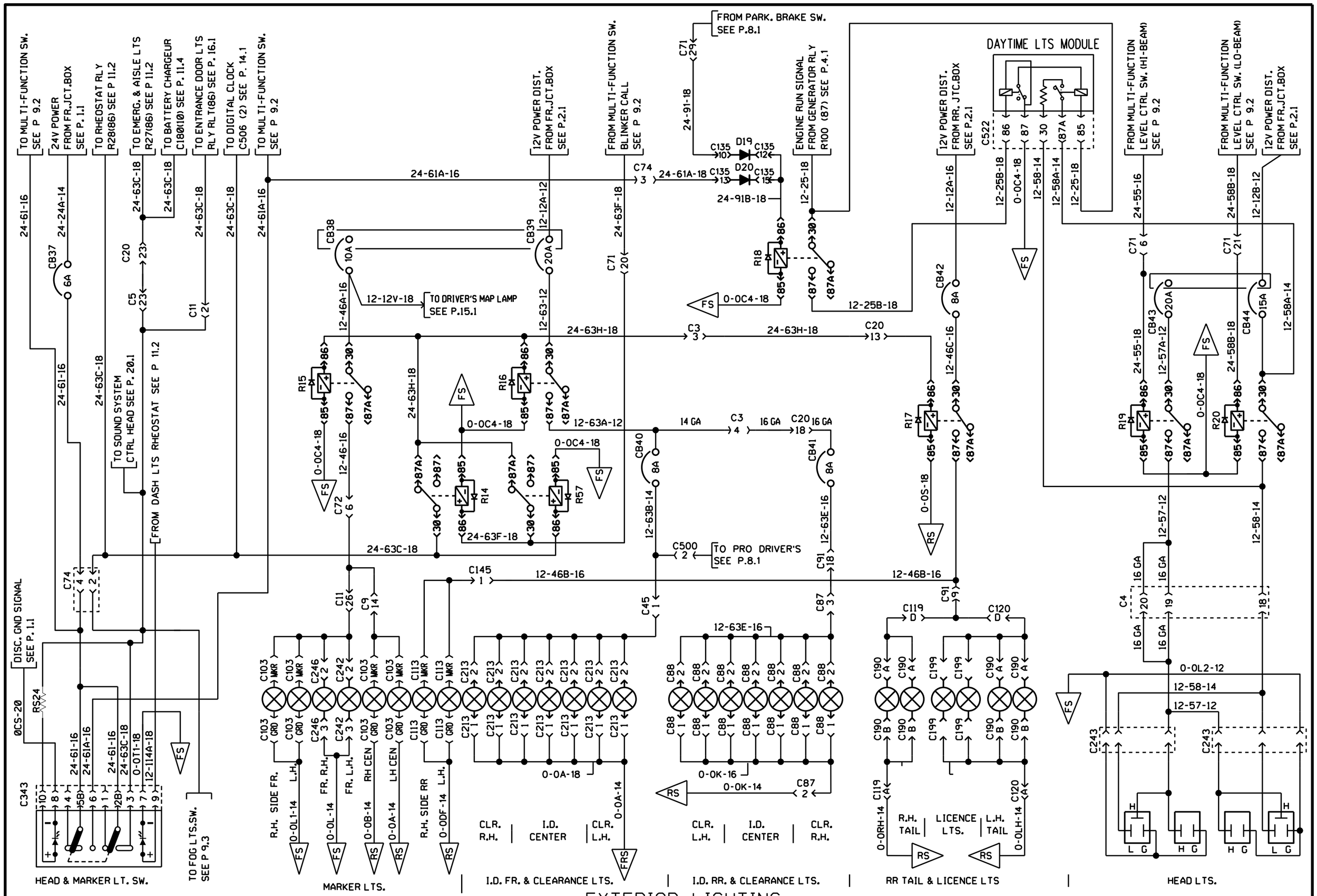

PREVOST	WIRING DIAGRAM	NO: D060902	PAGE: 9.1	REVISION 01

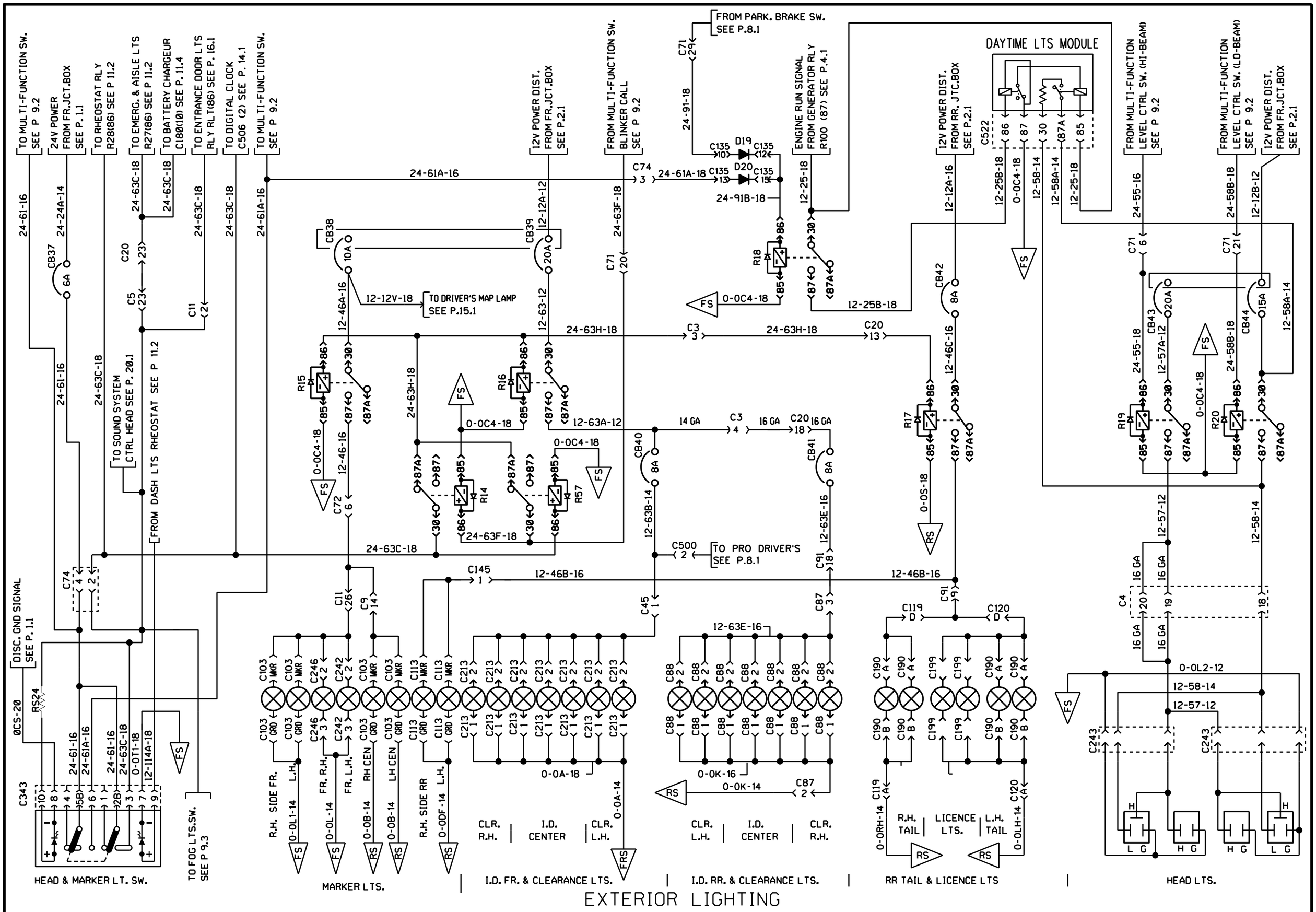

EXTERIOR LIGHTING

PREVOST	WIRING DIAGRAM	NO: D060902	PAGE: 9.1	REVISION 08

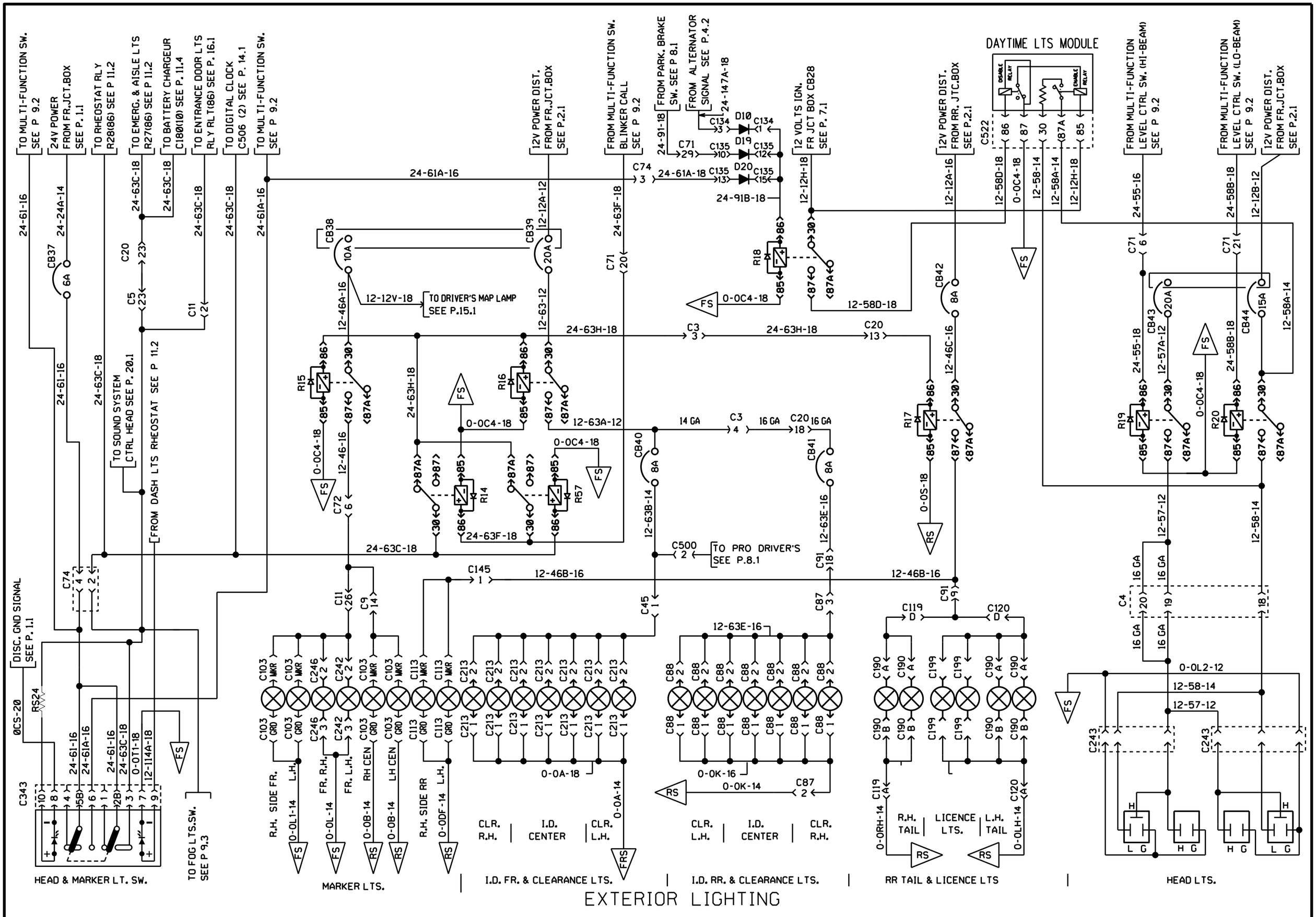

EXTERIOR LIGHTING

PREVOST	WIRING DIAGRAM	NO: D060902	PAGE: 9.1	REVISION 16

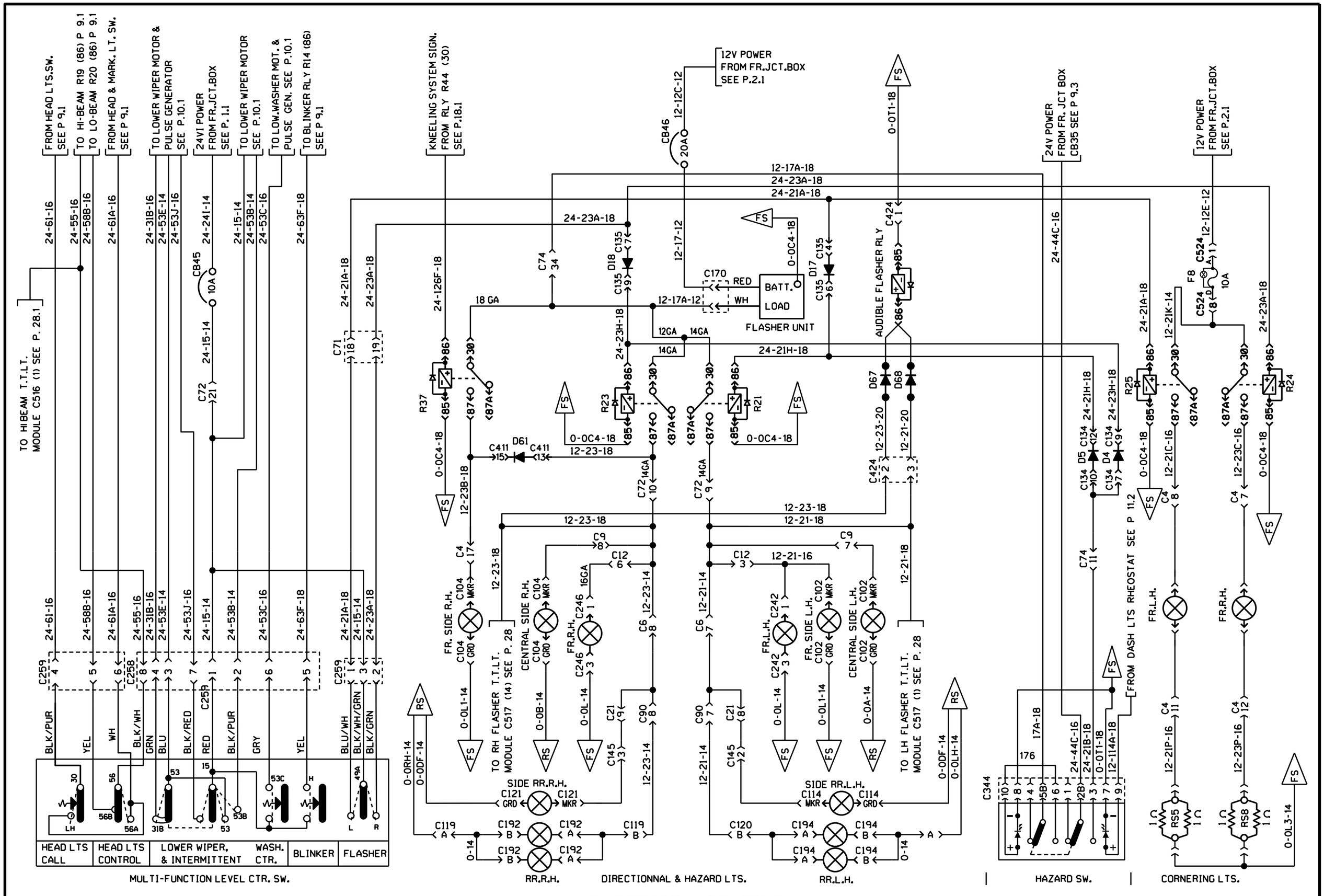

EXTERIOR LIGHTING

PREVOST	WIRING DIAGRAM	NO: D060902	PAGE: 9.2	REVISION 00

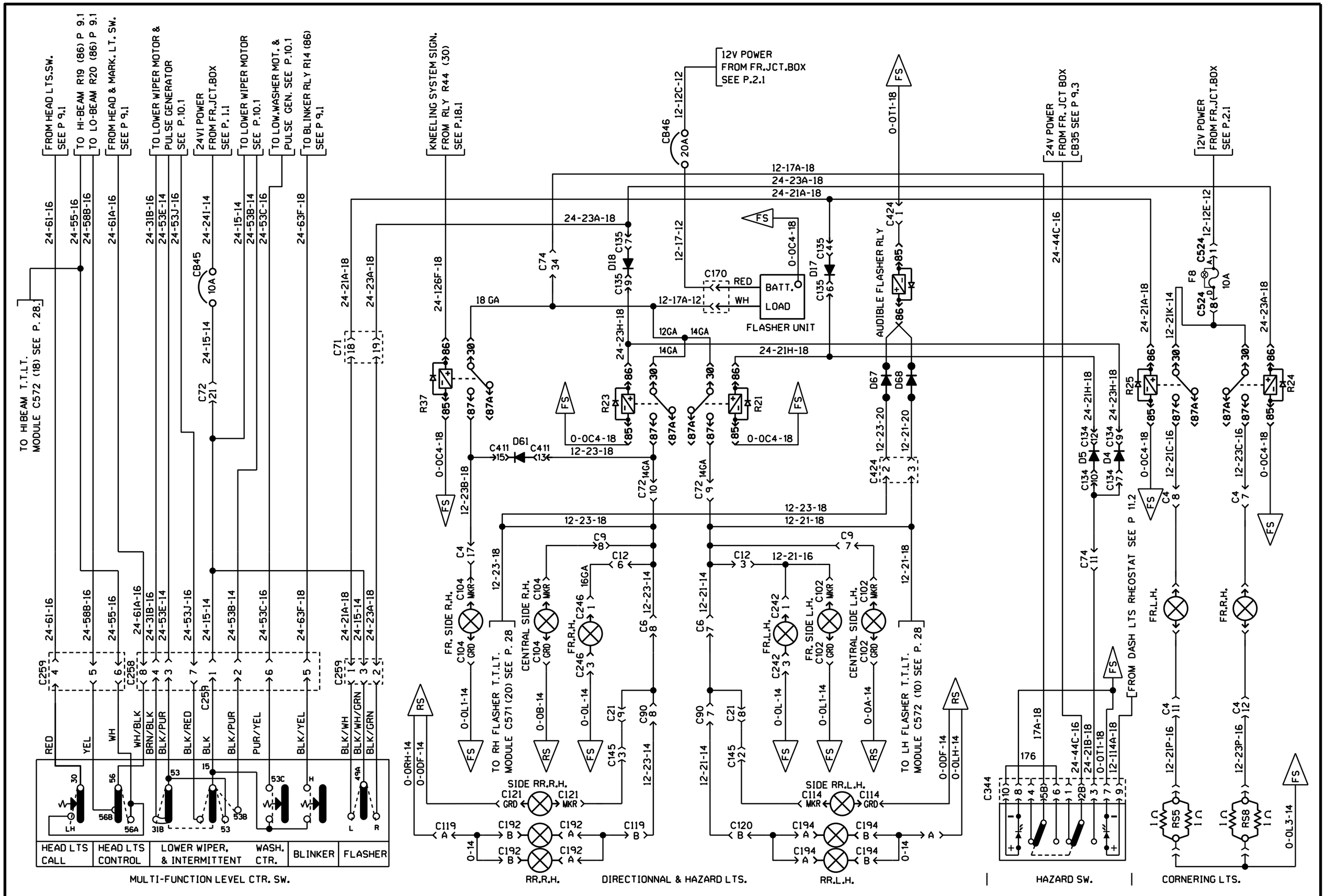

EXTERIOR LIGHTING

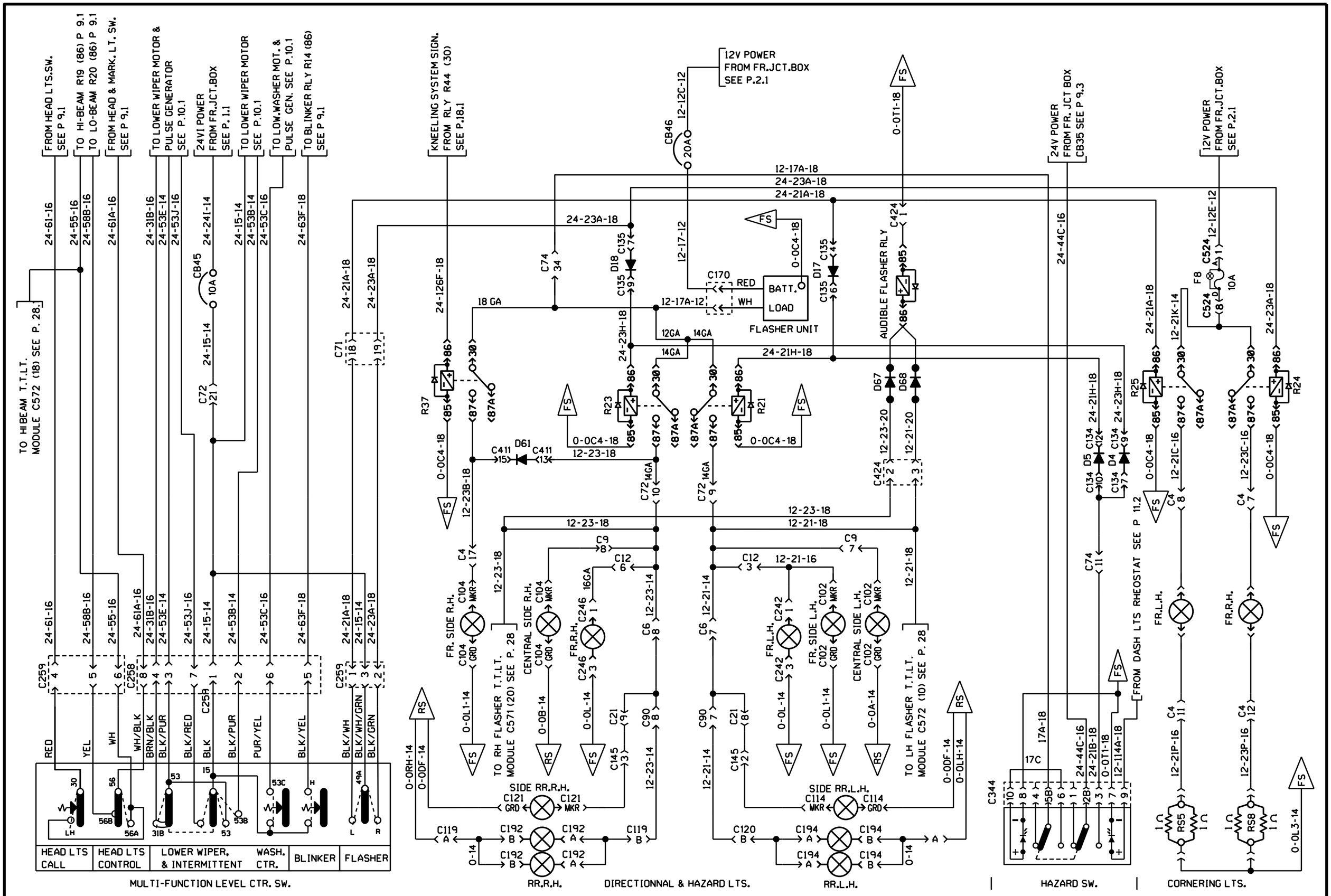

EXTERIOR LIGHTING

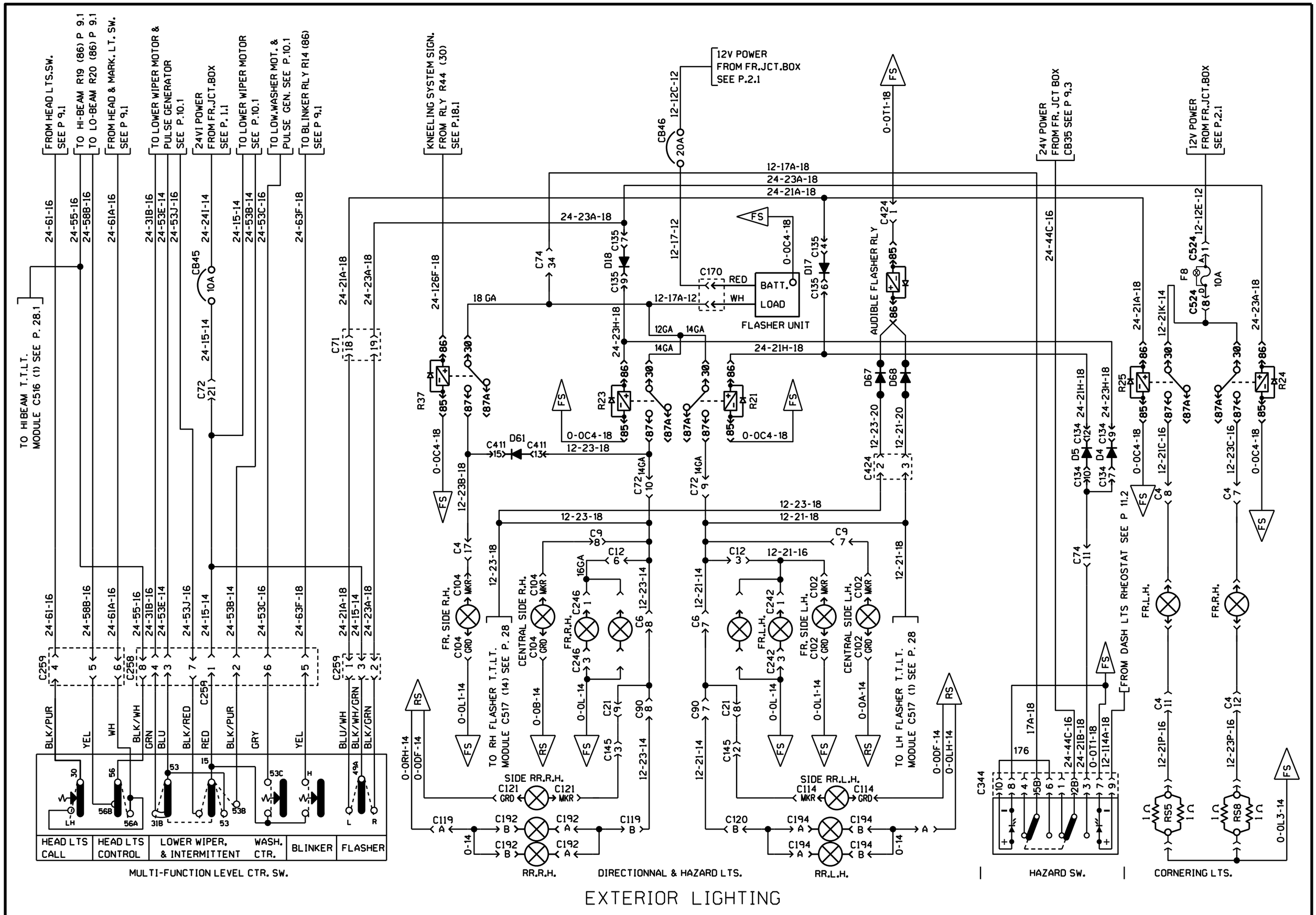

PREVOST	WIRING DIAGRAM	NO: D060902	PAGE: 9.2sp1	REVISION 00

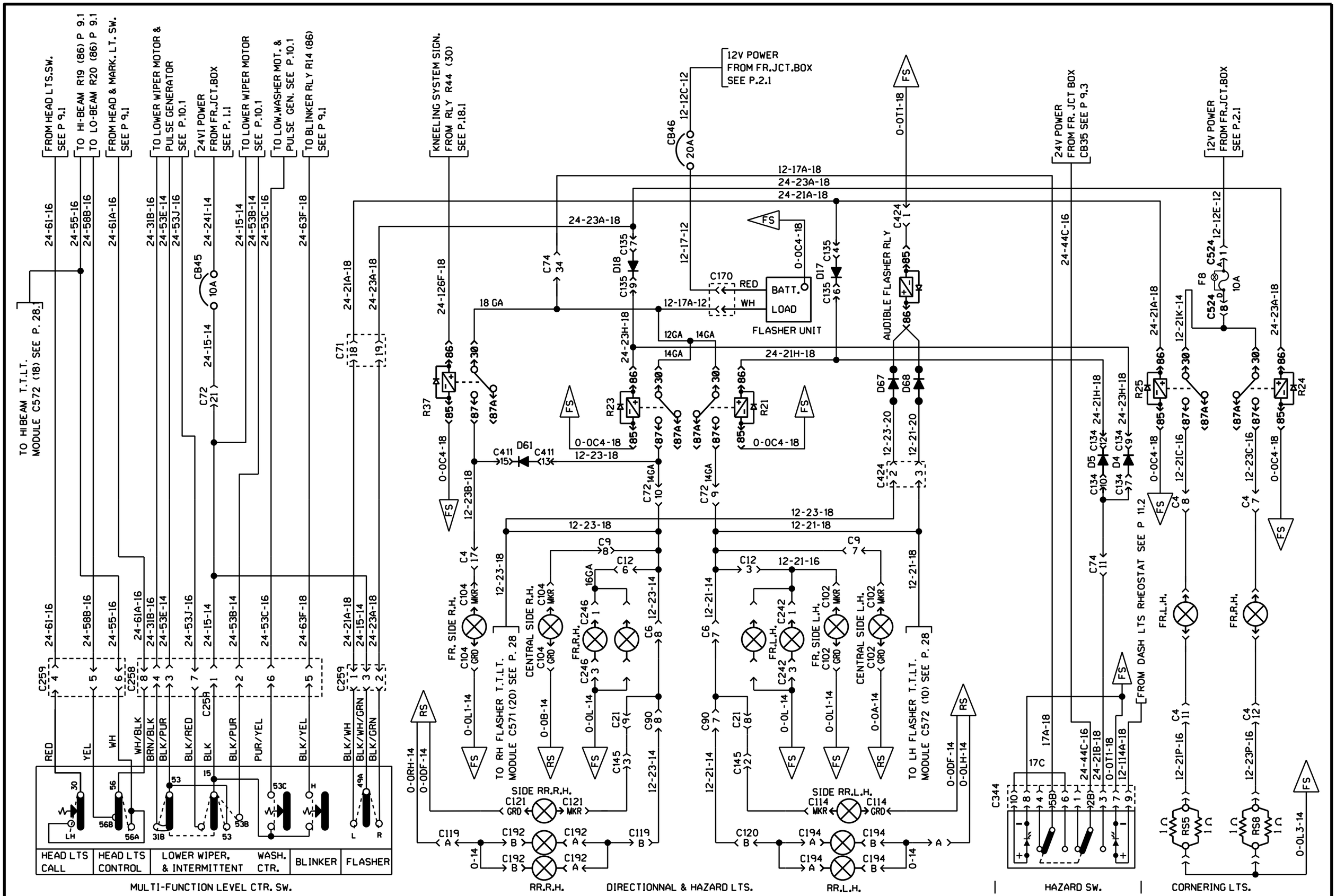

EXTERIOR LIGHTING

PREVOST	WIRING DIAGRAM	NO: D060902	PAGE: 9.2 SP1	REVISION 01

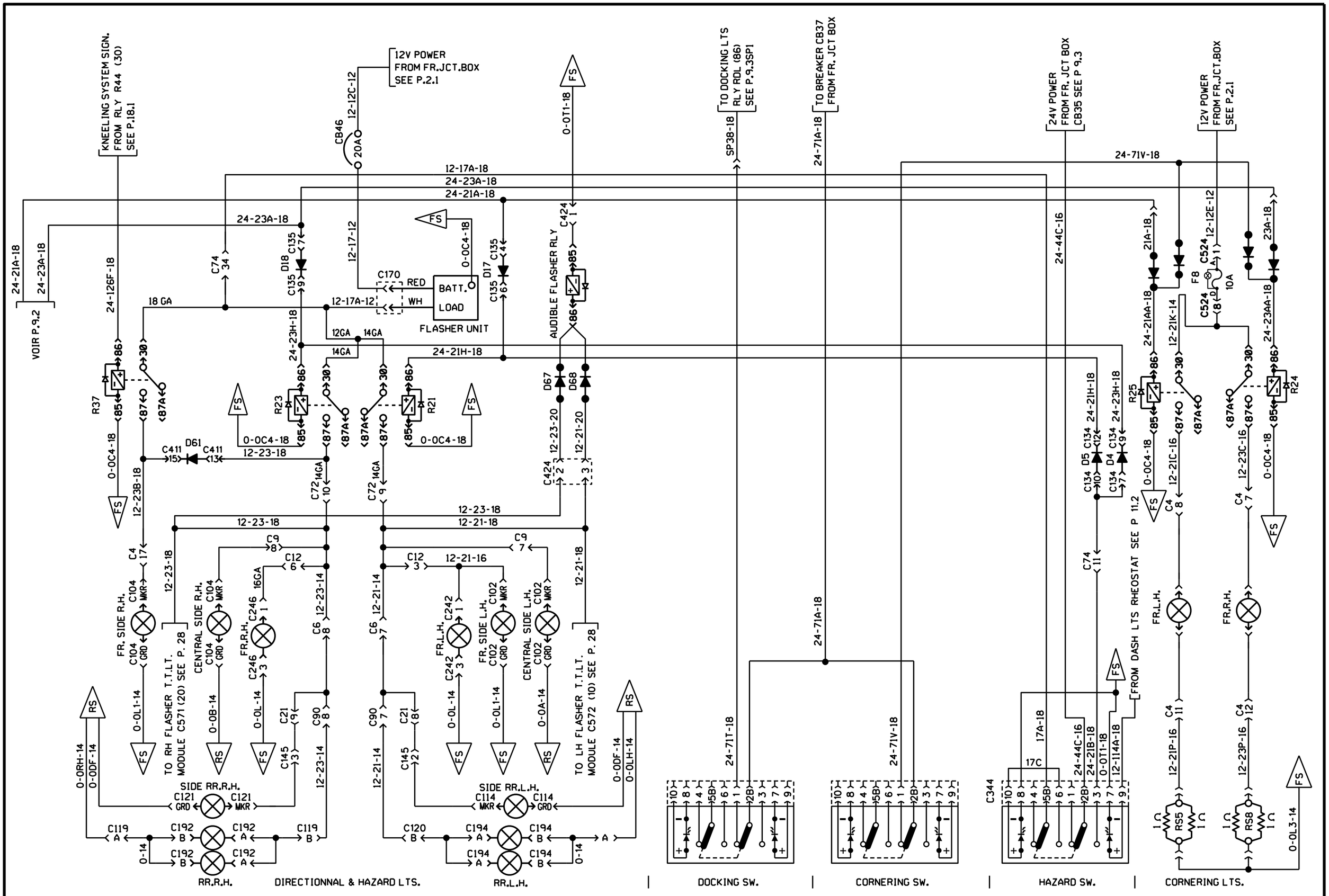

EXTERIOR LIGHTING

PREVOST	WIRING DIAGRAM	NO: D060902	PAGE: 9.2sp2	REVISION 00

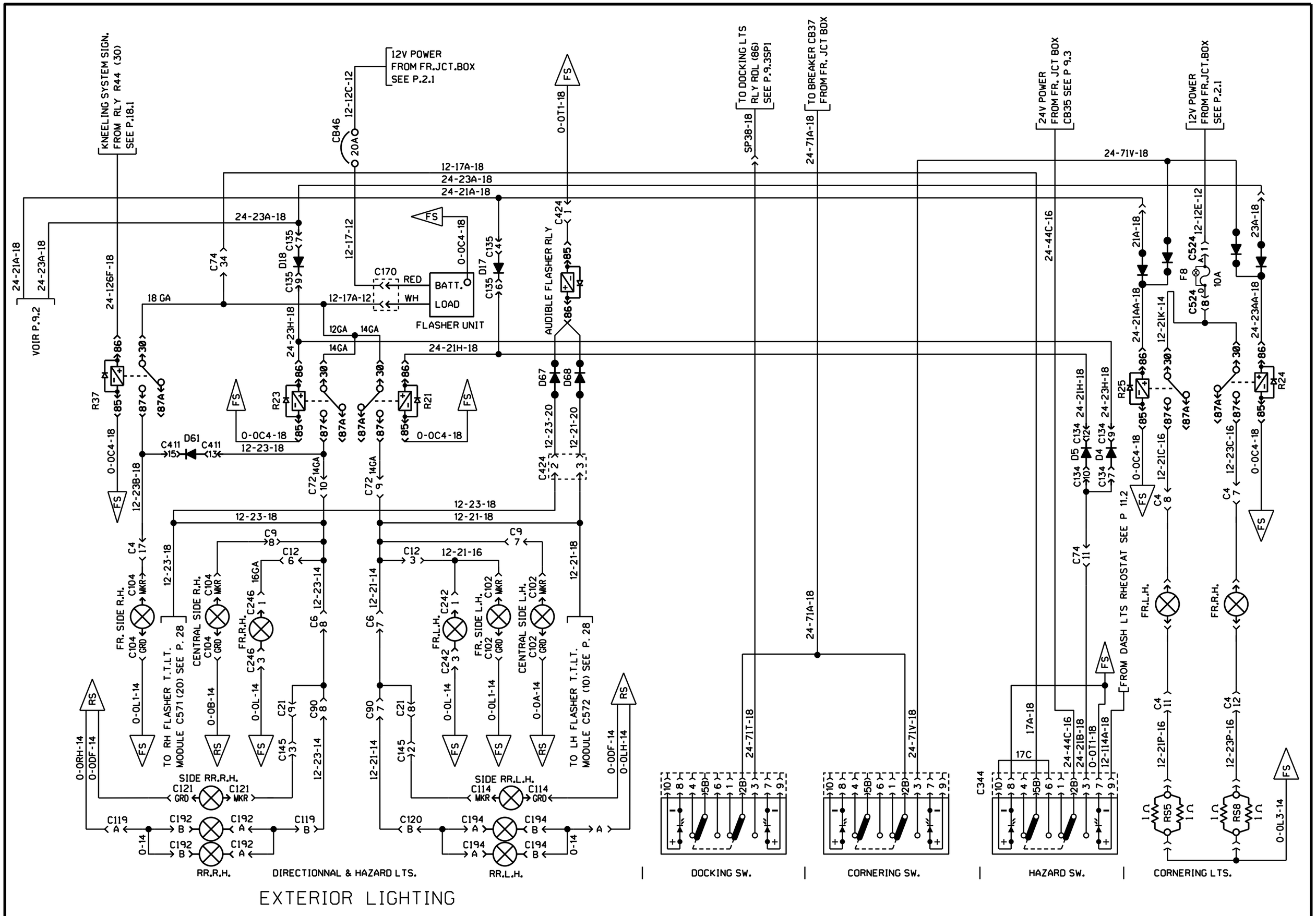

EXTERIOR LIGHTING

PREVOST	WIRING DIAGRAM	NO: D060902	PAGE: 9.2sp2	REVISION 22

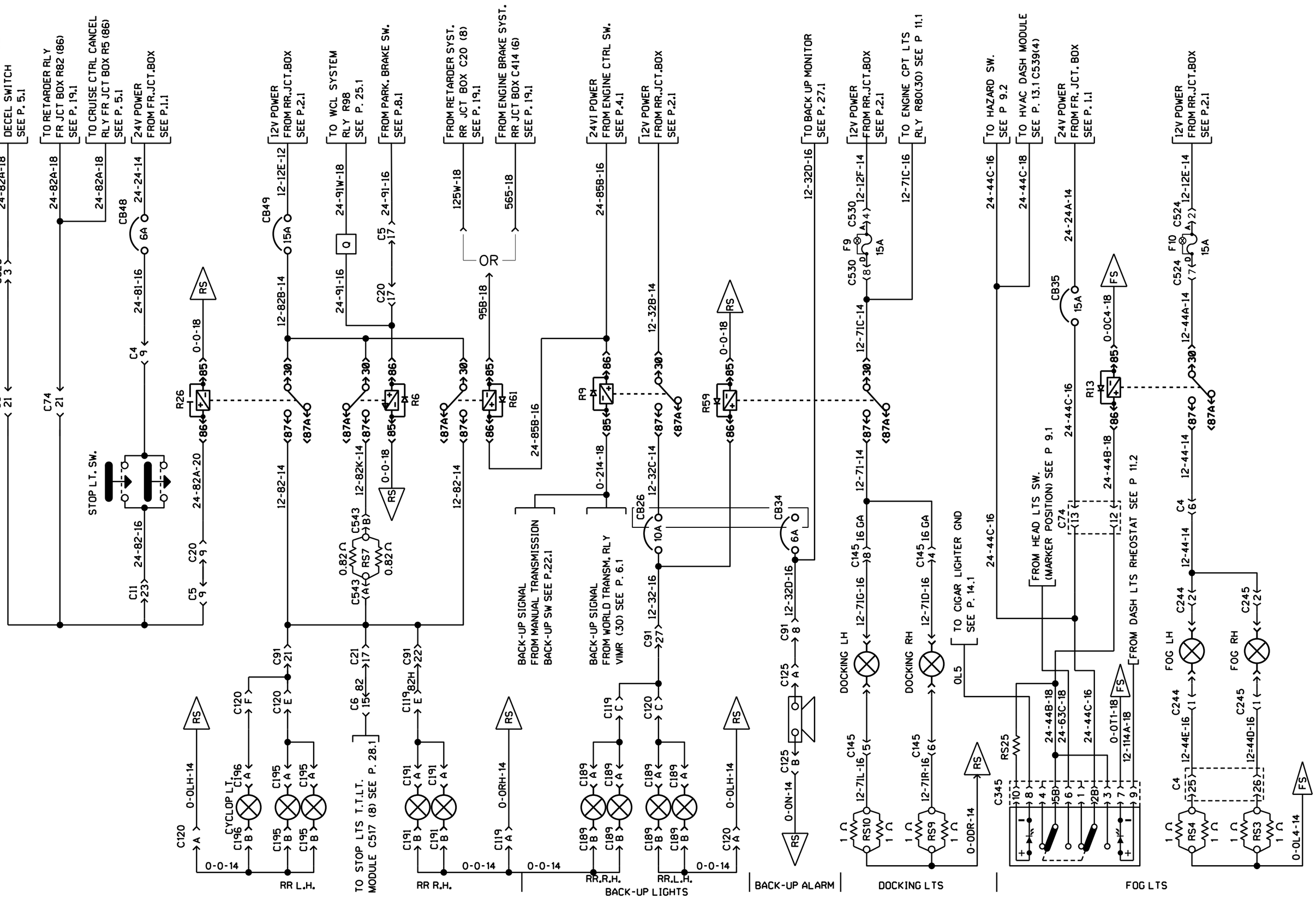

EXTERIOR LIGHTING

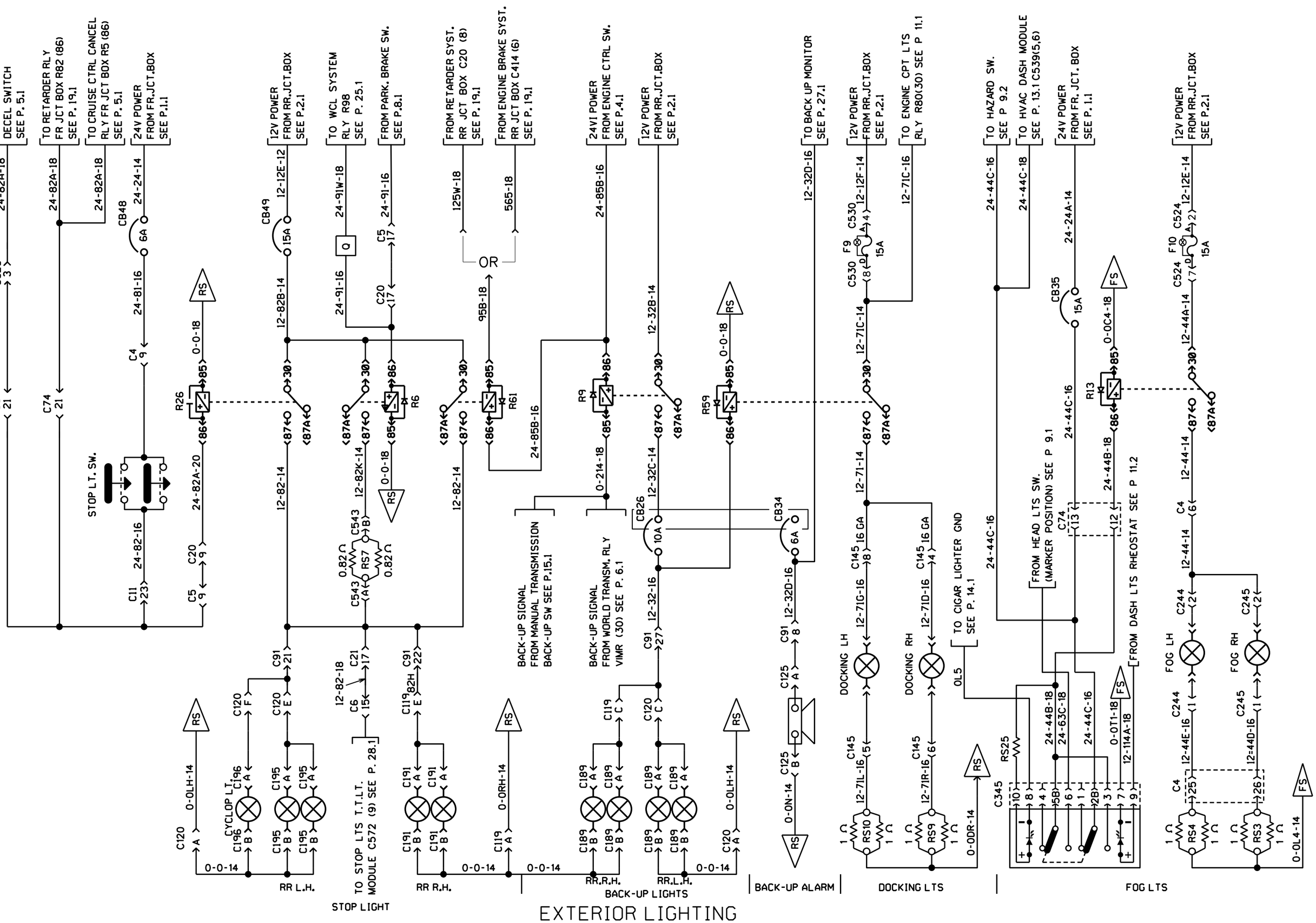

EXTERIOR LIGHTING

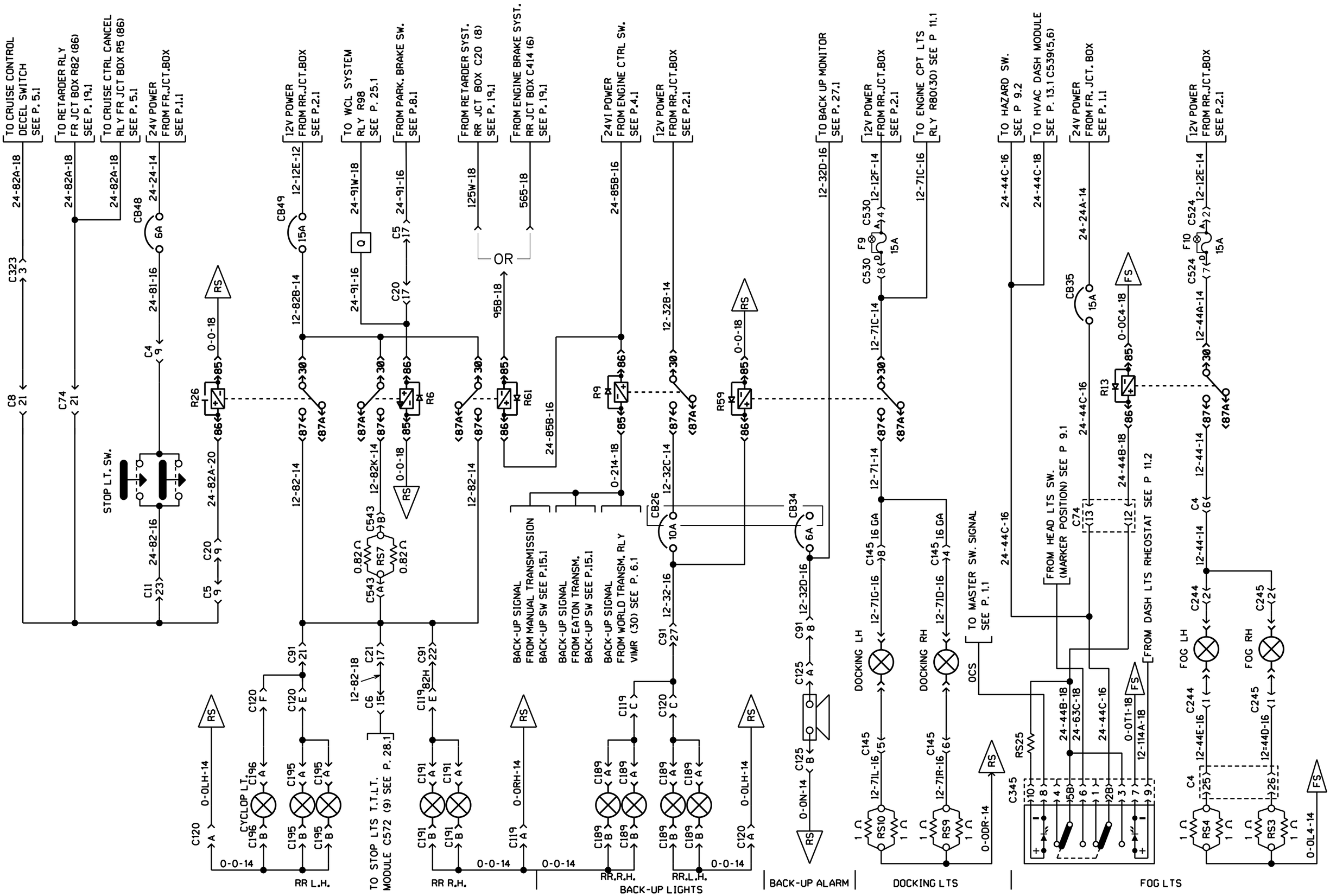

EXTERIOR LIGHTING

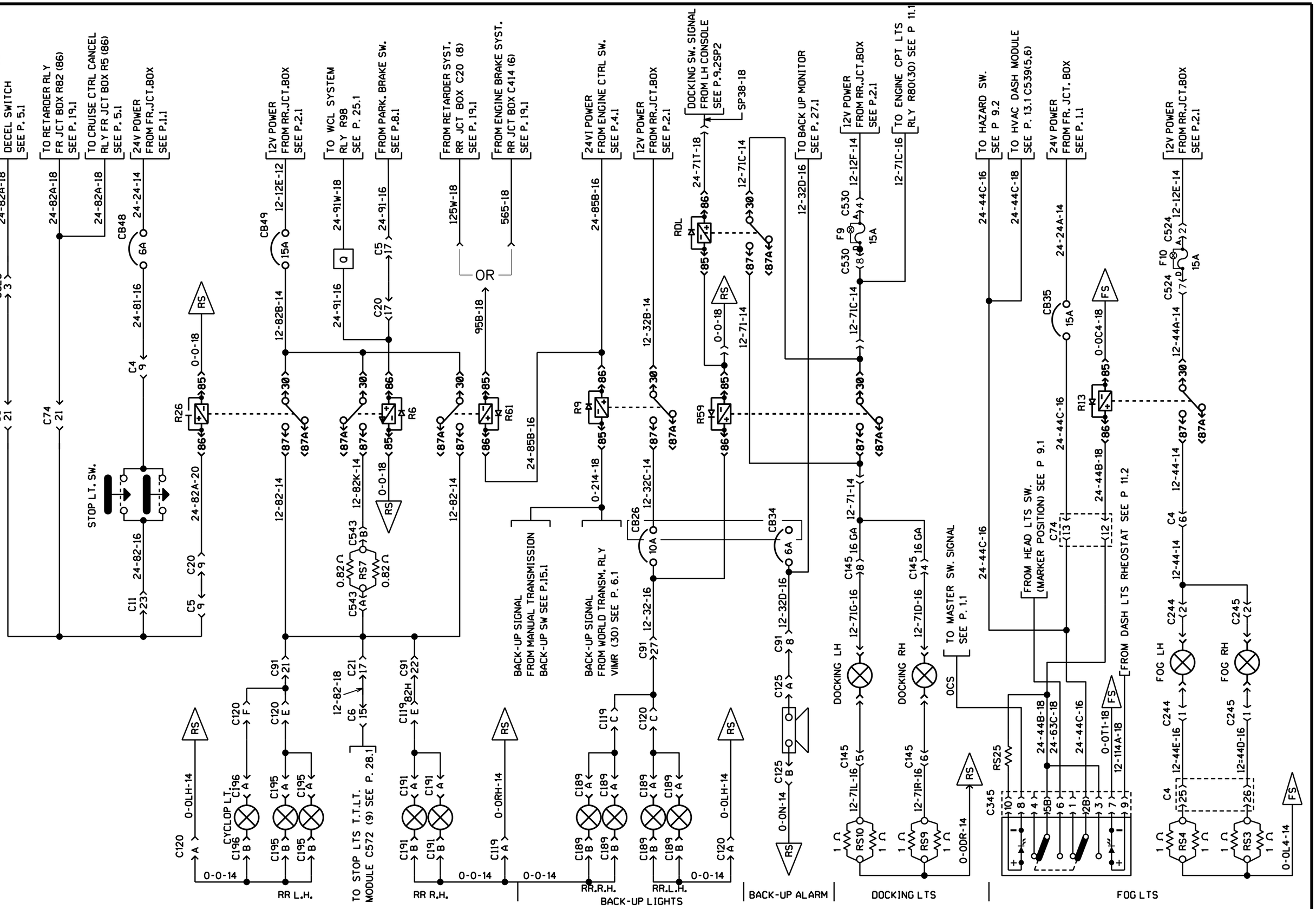

EXTERIOR LIGHTING

PREVOST	WIRING DIAGRAM	NO: D060902	PAGE: 9.3sp1	REVISION 00

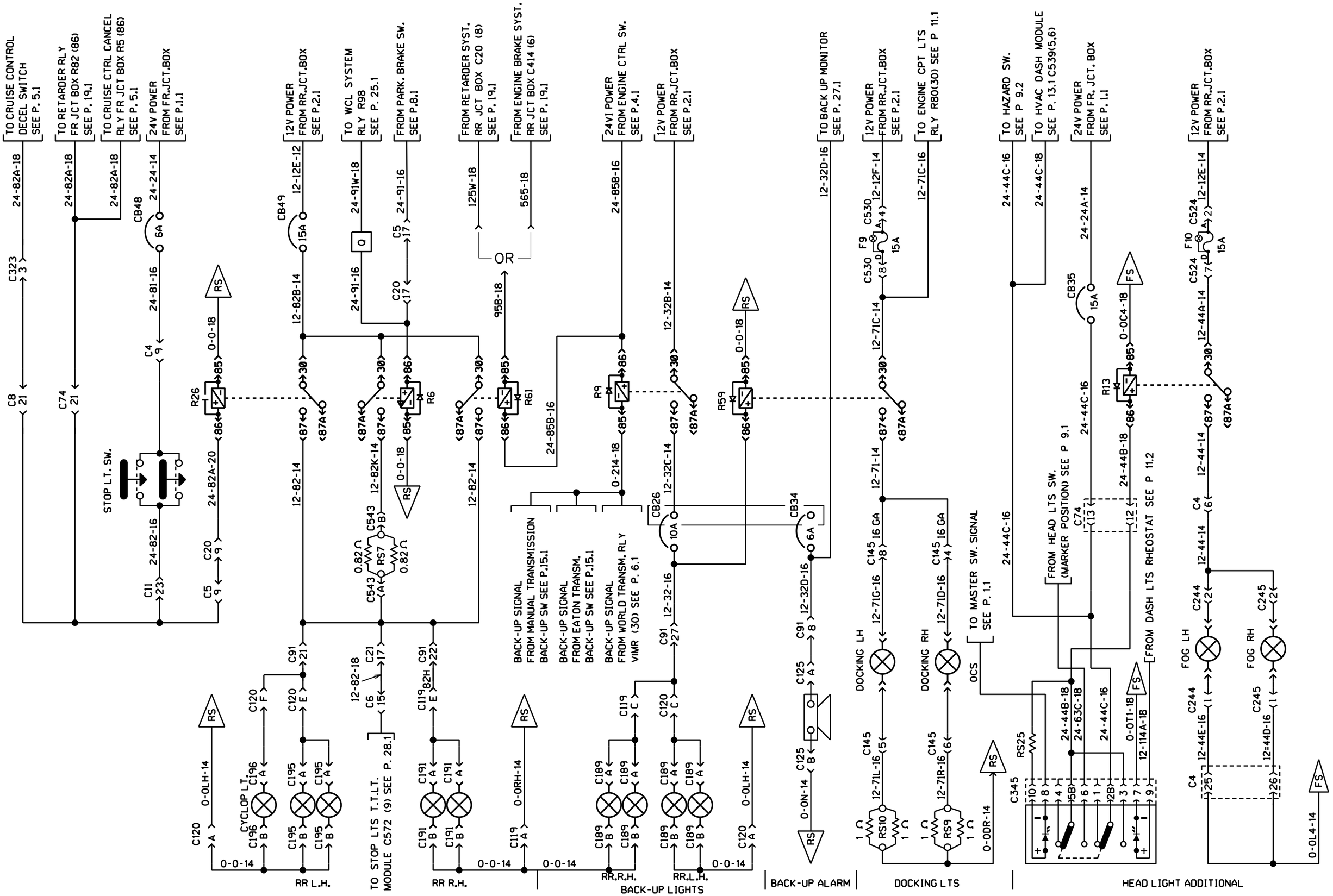

EXTERIOR LIGHTING

X3298 (LIMOCAR)

PREVOST	WIRING DIAGRAM	NO: D060902	PAGE: 9.3 sp3	REVISION 00

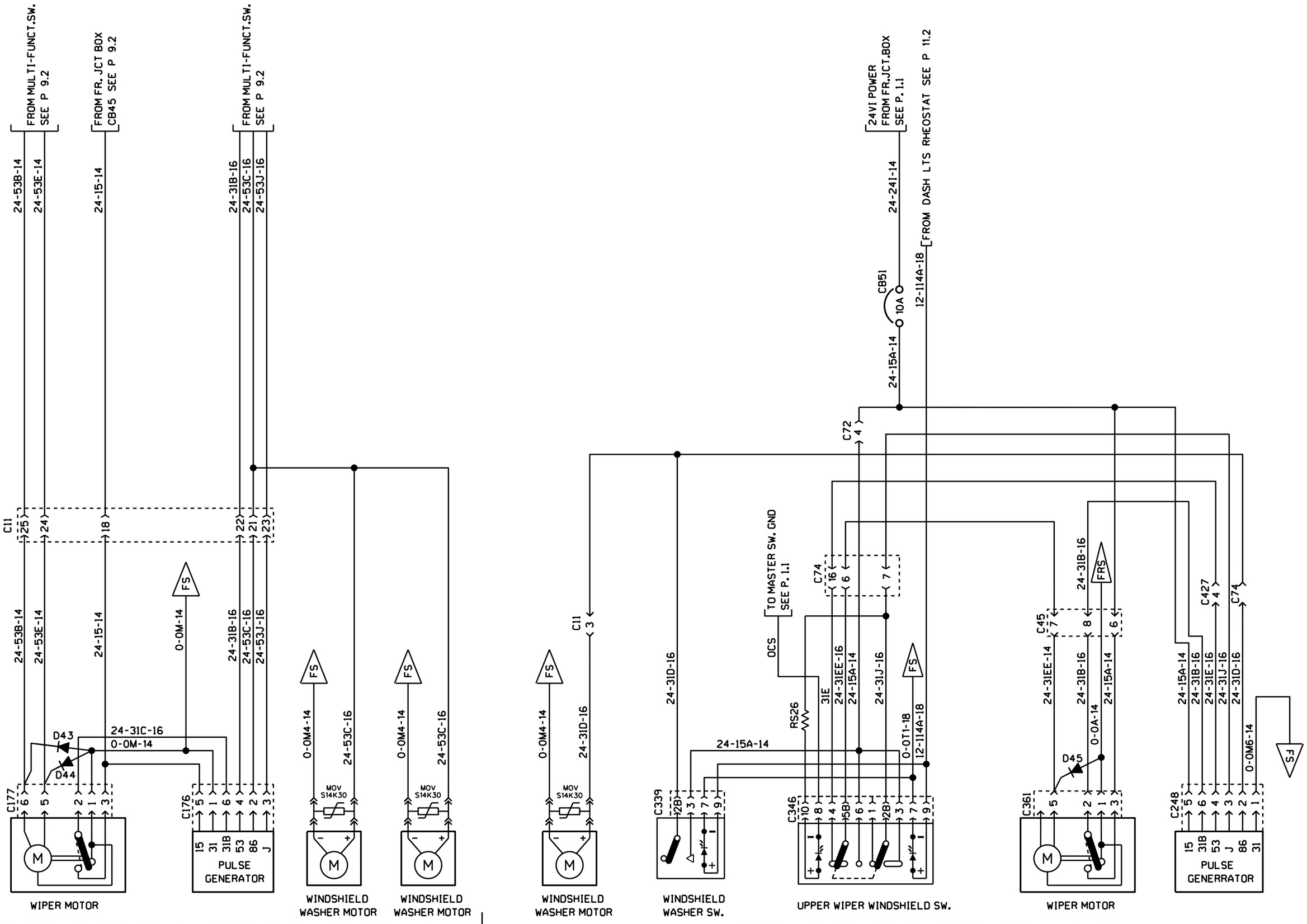

PREVOST	WIRING DIAGRAM	NO: D060902	PAGE: 10.1	REVISION 00

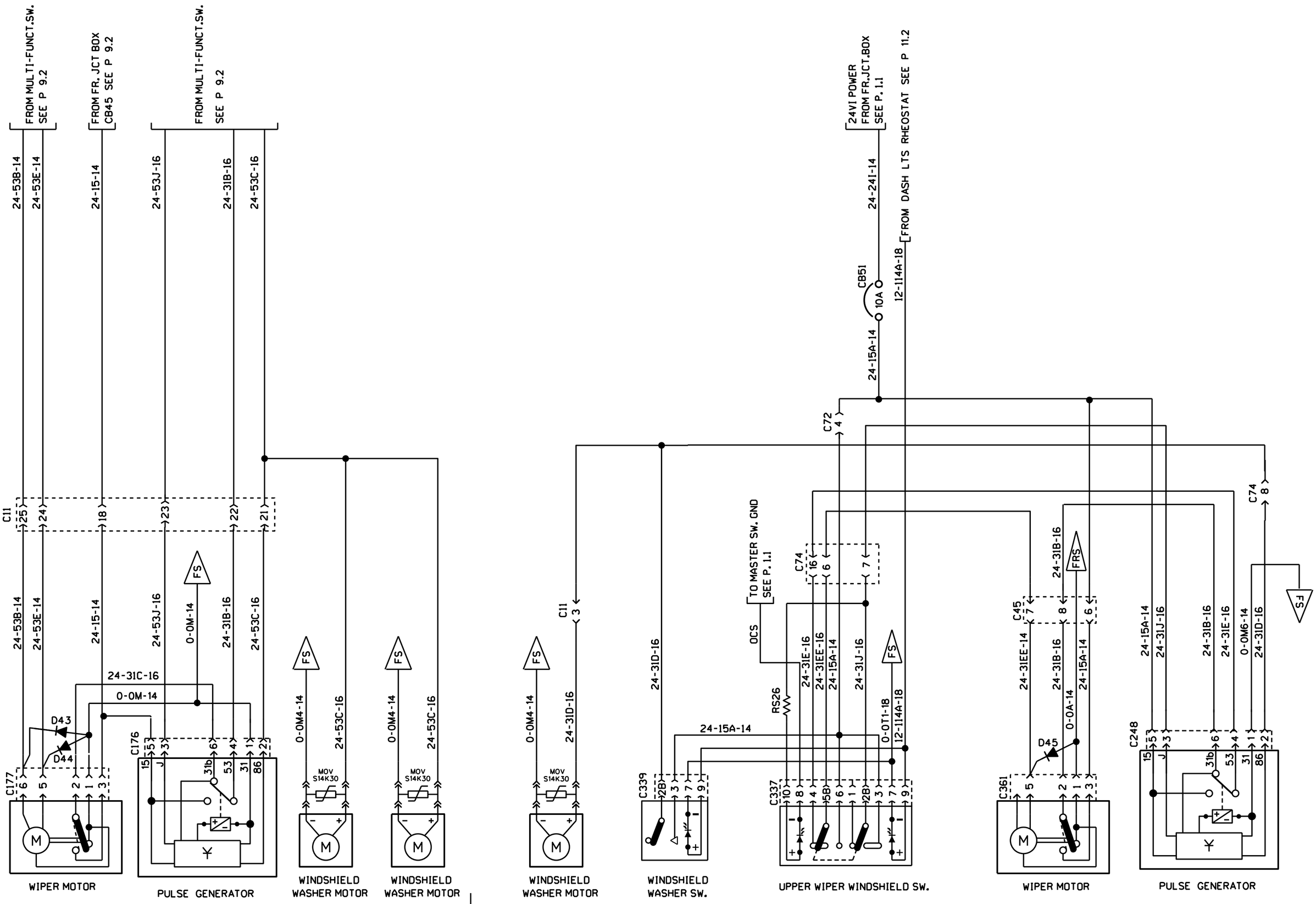

PREVOST	WIRING DIAGRAM	NO: D060902	PAGE: 10.1	REVISION 01

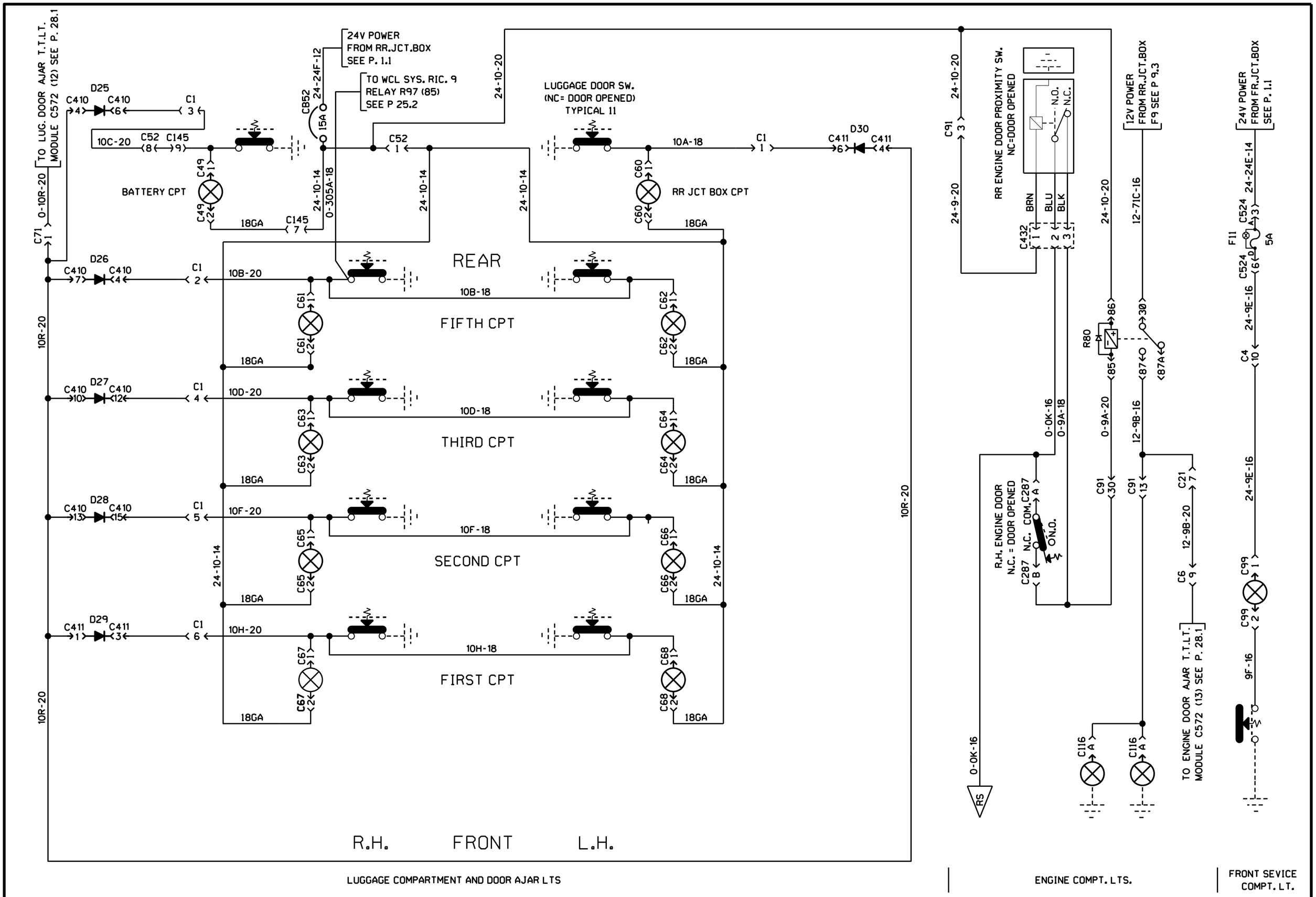

INTERIOR LIGHTING

PREVOST	WIRING DIAGRAM	NO: D060902	PAGE: 11.1	REVISION 01

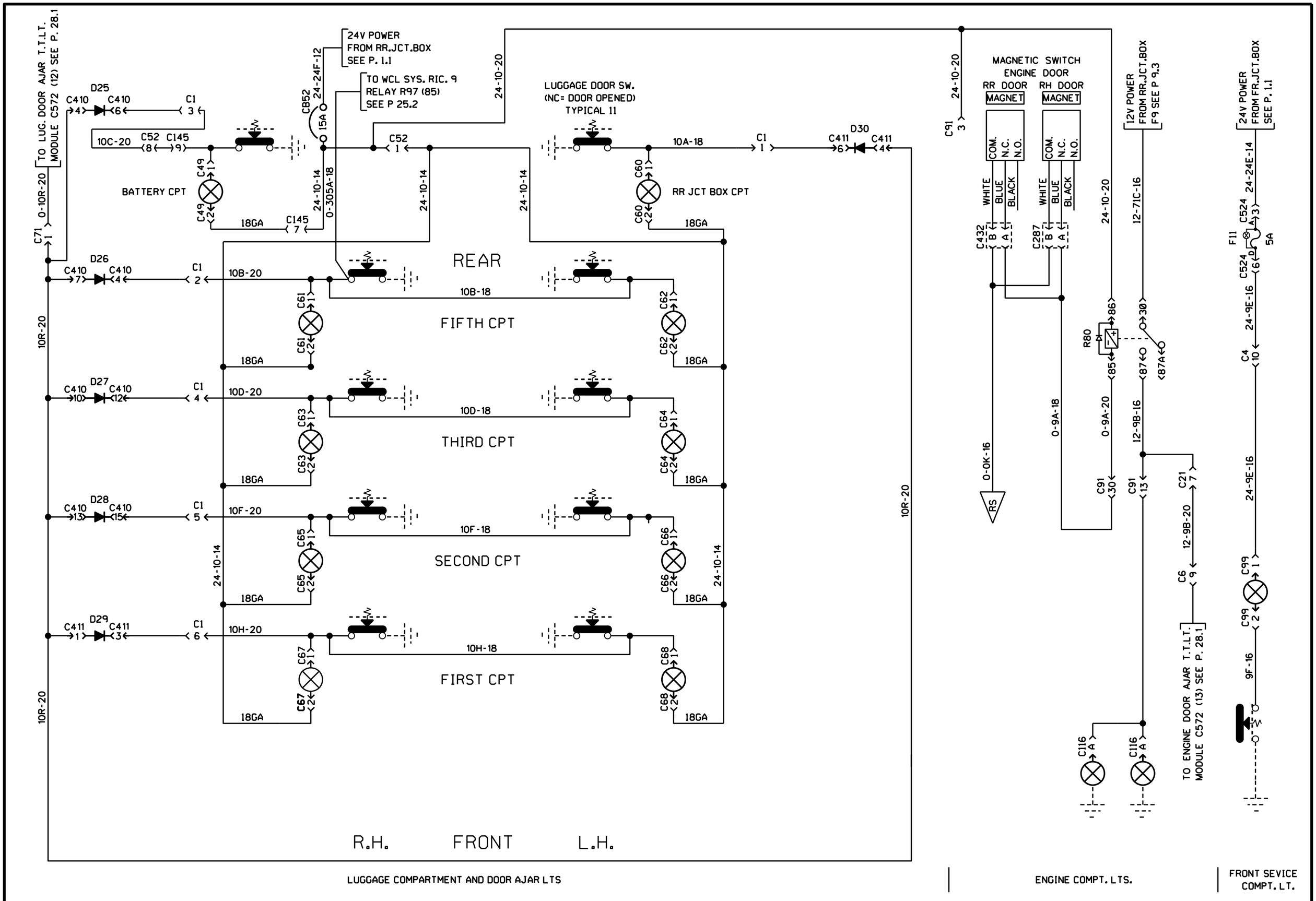

INTERIOR LIGHTING

PREVOST	WIRING DIAGRAM	NO: D060902	PAGE: 11.1	REVISION 20

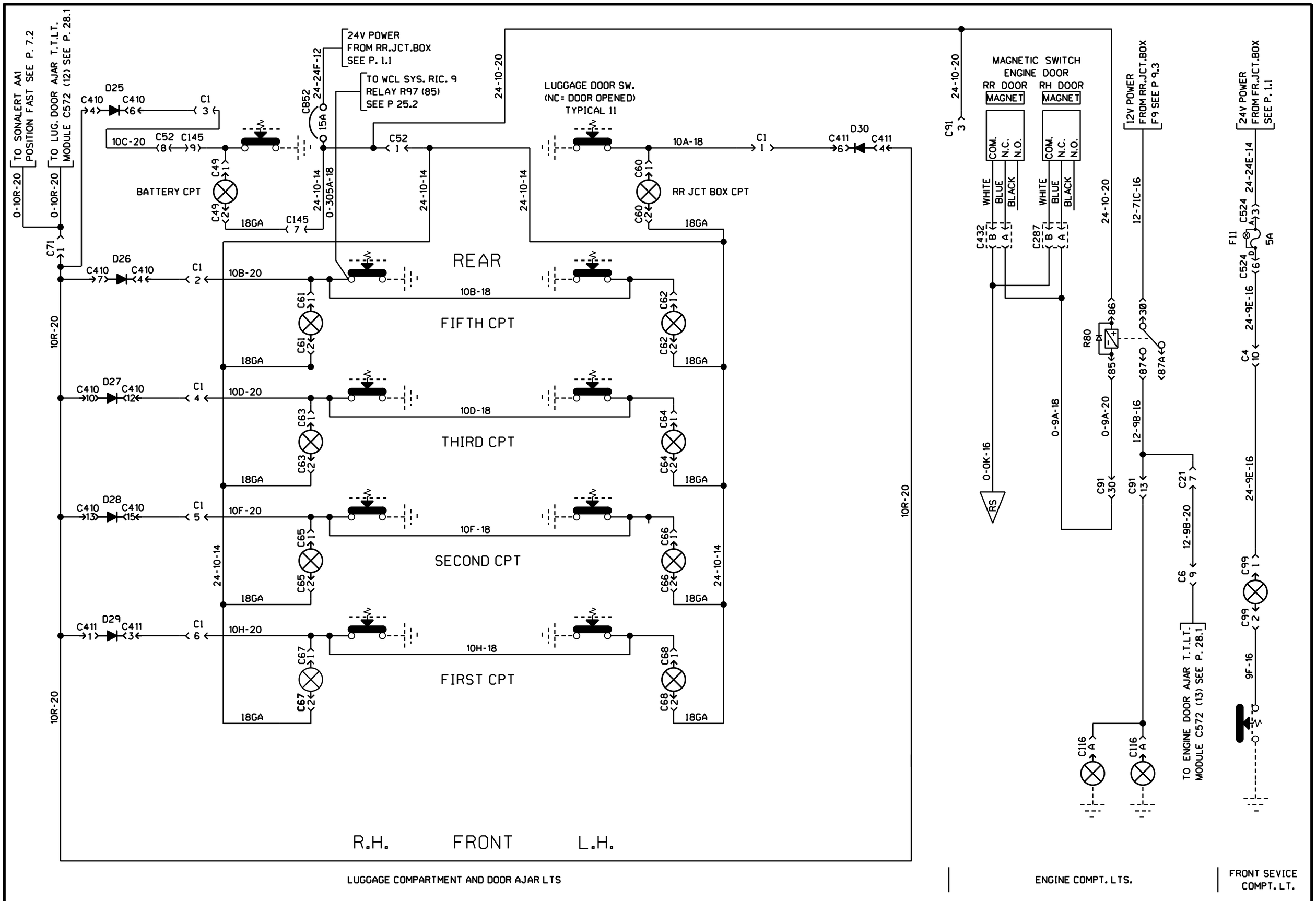

INTERIOR LIGHTING

VEH. PWT

PREVOST	WIRING DIAGRAM	NO: D060902	PAGE: 11.1 sp1	REVISION 00

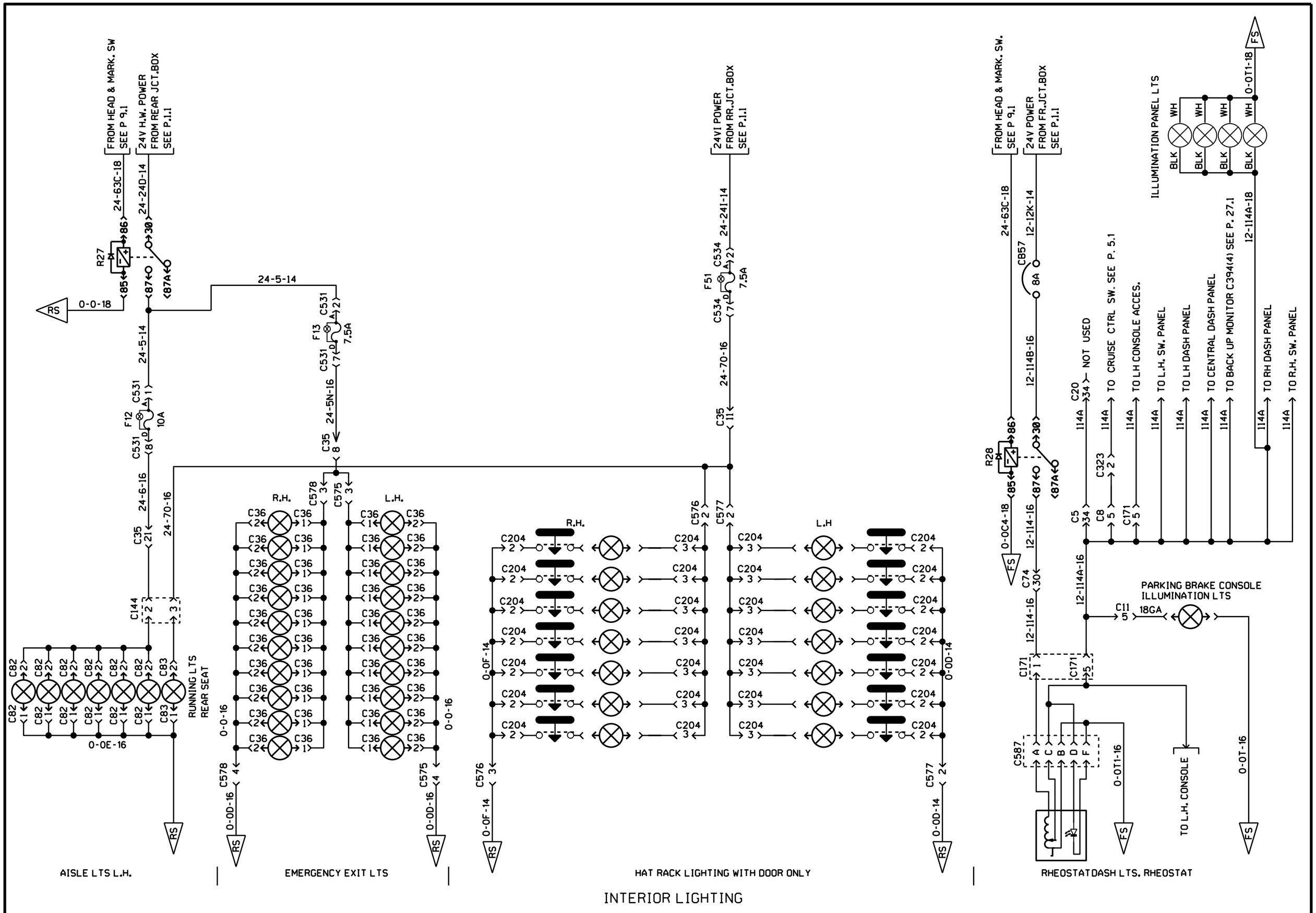

INTERIOR LIGHTING

PREVOST	WIRING DIAGRAM	NO: D060902	PAGE: 11.2	REVISION 00

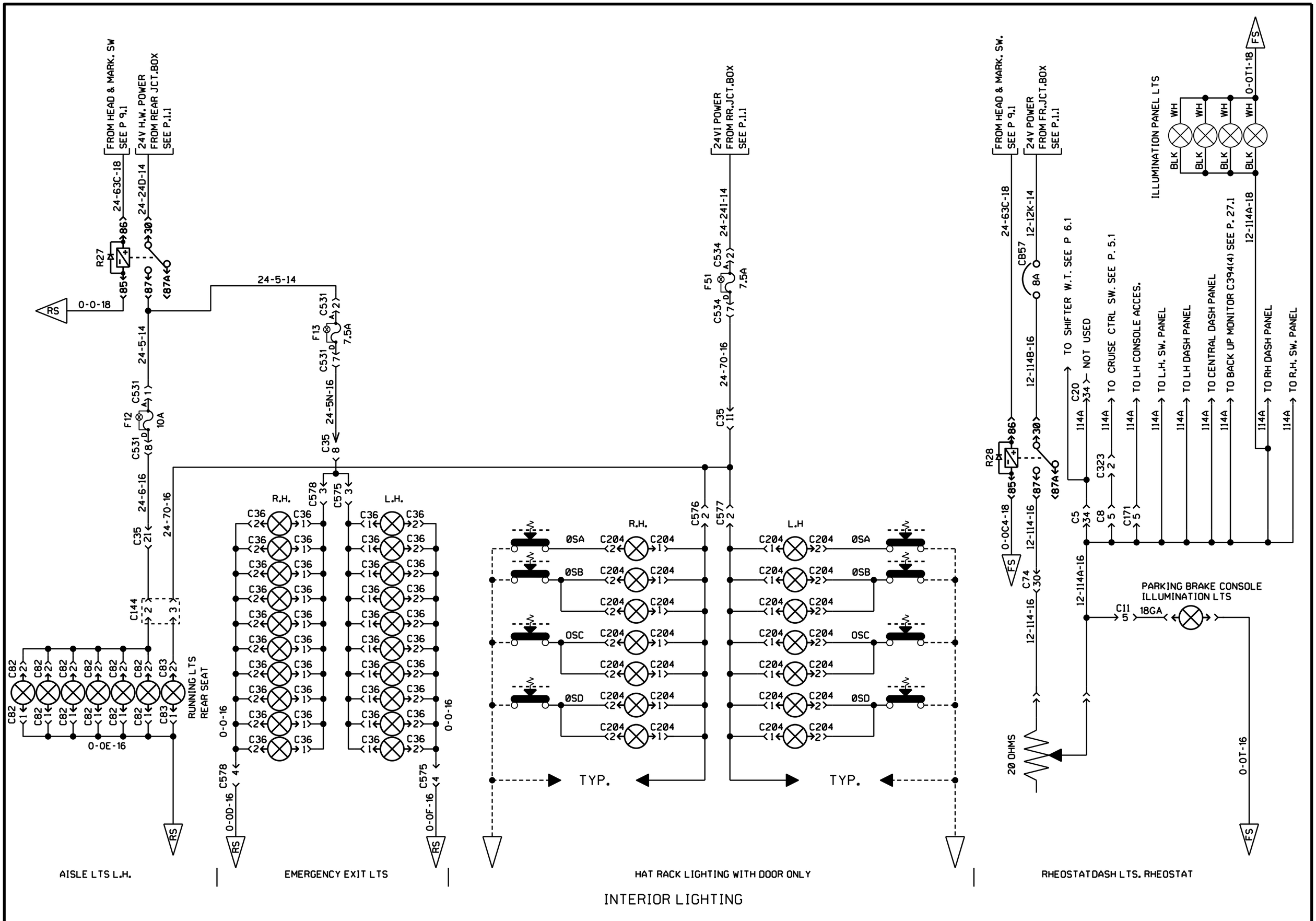

INTERIOR LIGHTING

PREVOST	WIRING DIAGRAM	NO: D060902	PAGE: 11.2	REVISION 01

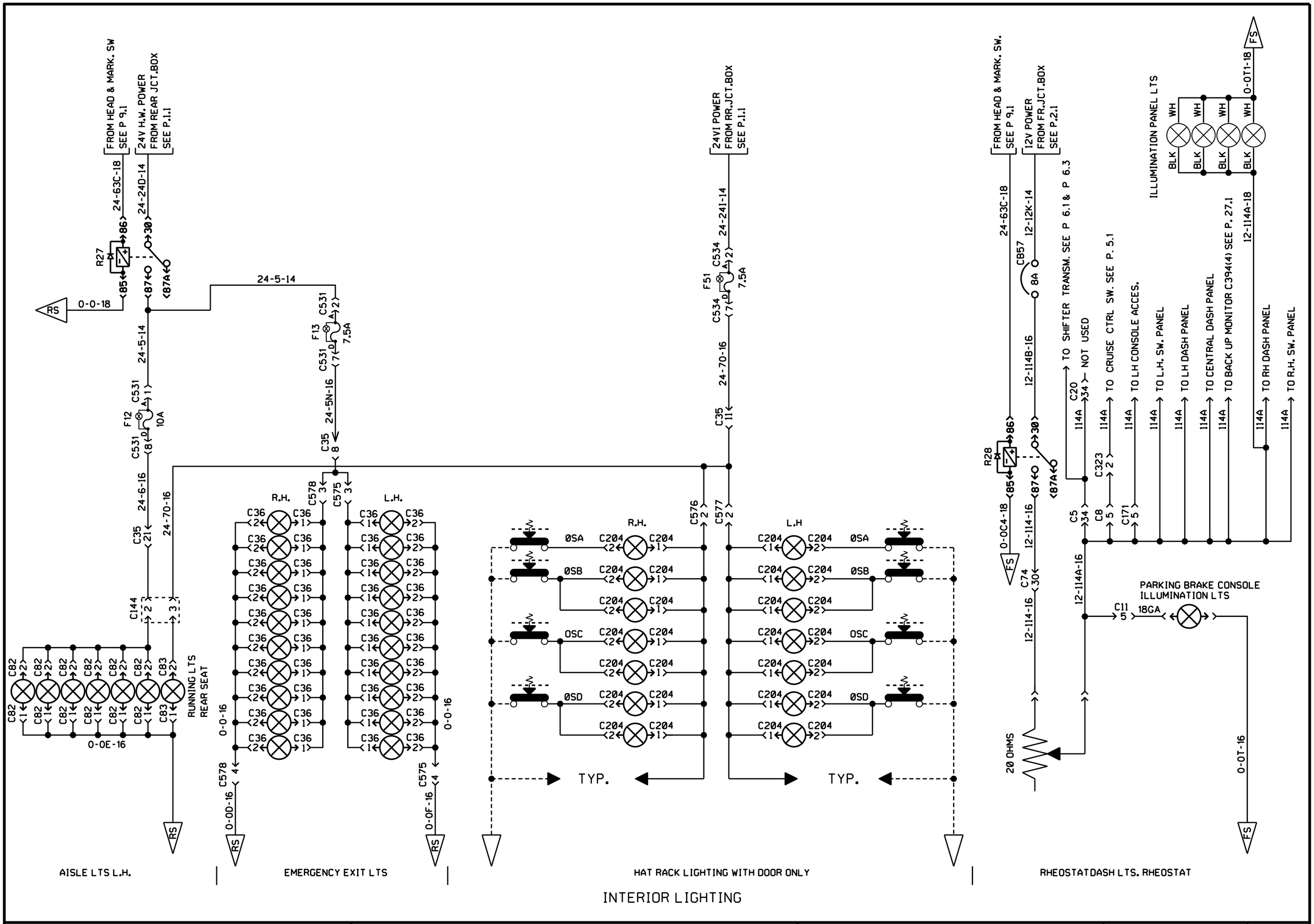

PREVOST	WIRING DIAGRAM	NO: D060902	PAGE: 11.2	REVISION 08

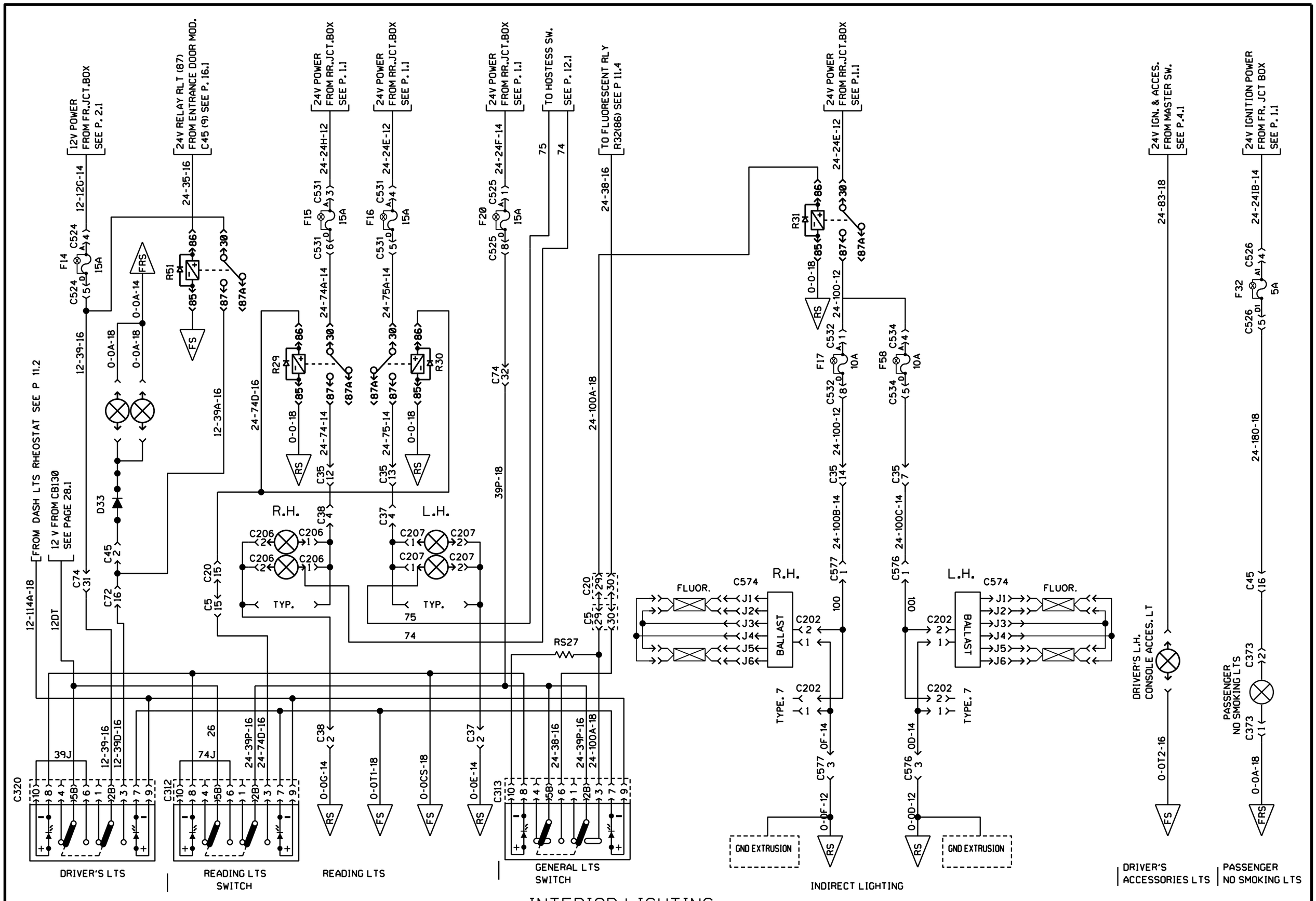

INTERIOR LIGHTING

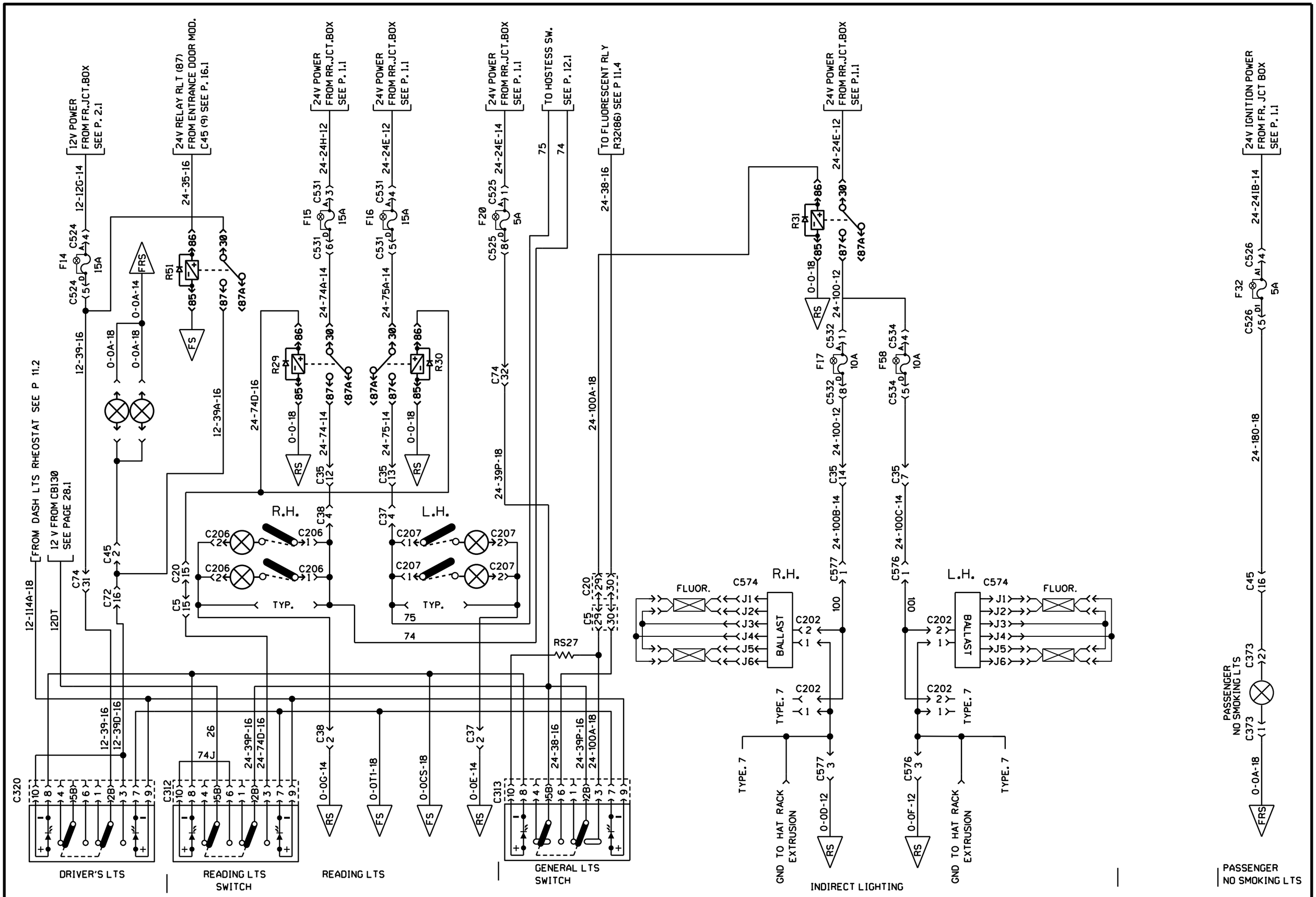

INTERIOR LIGHTING

PREVOST	WIRING DIAGRAM	NO: D060902	PAGE: 11.3	REVISION 01

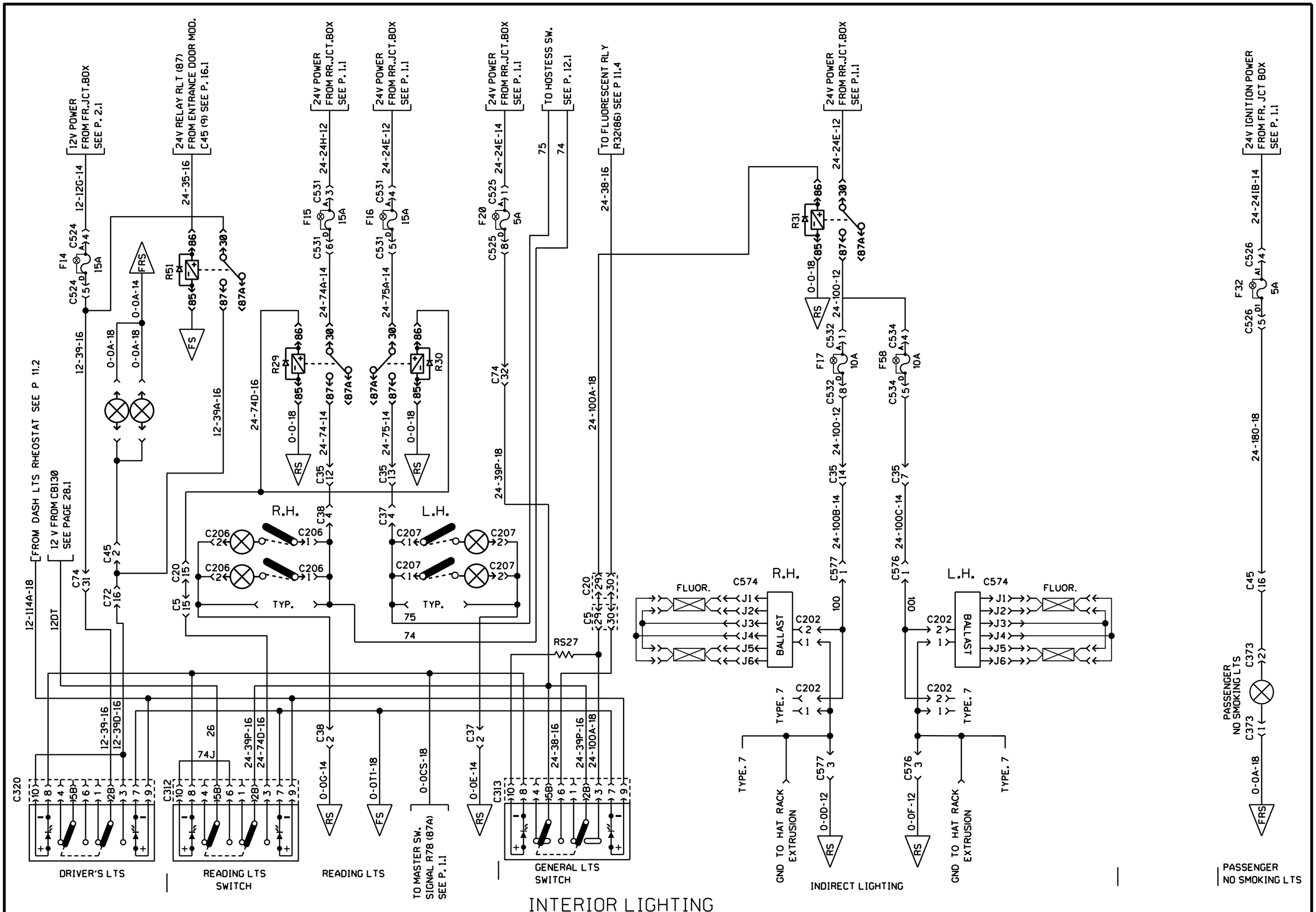

INTERIOR LIGHTING

PREVOST	WIRING DIAGRAM	NO: D060902	PAGE: 11.3	REVISION 08

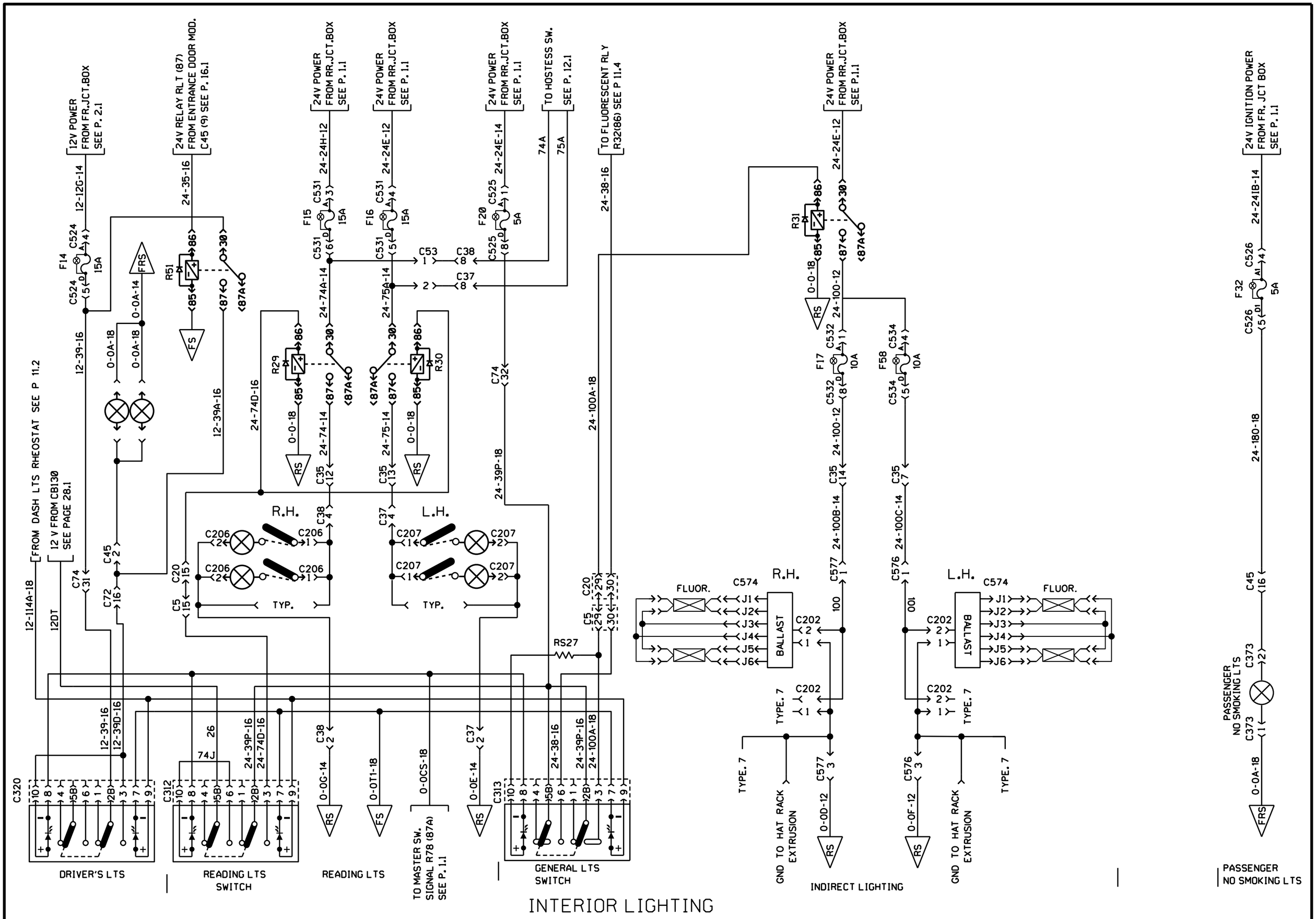

INTERIOR LIGHTING

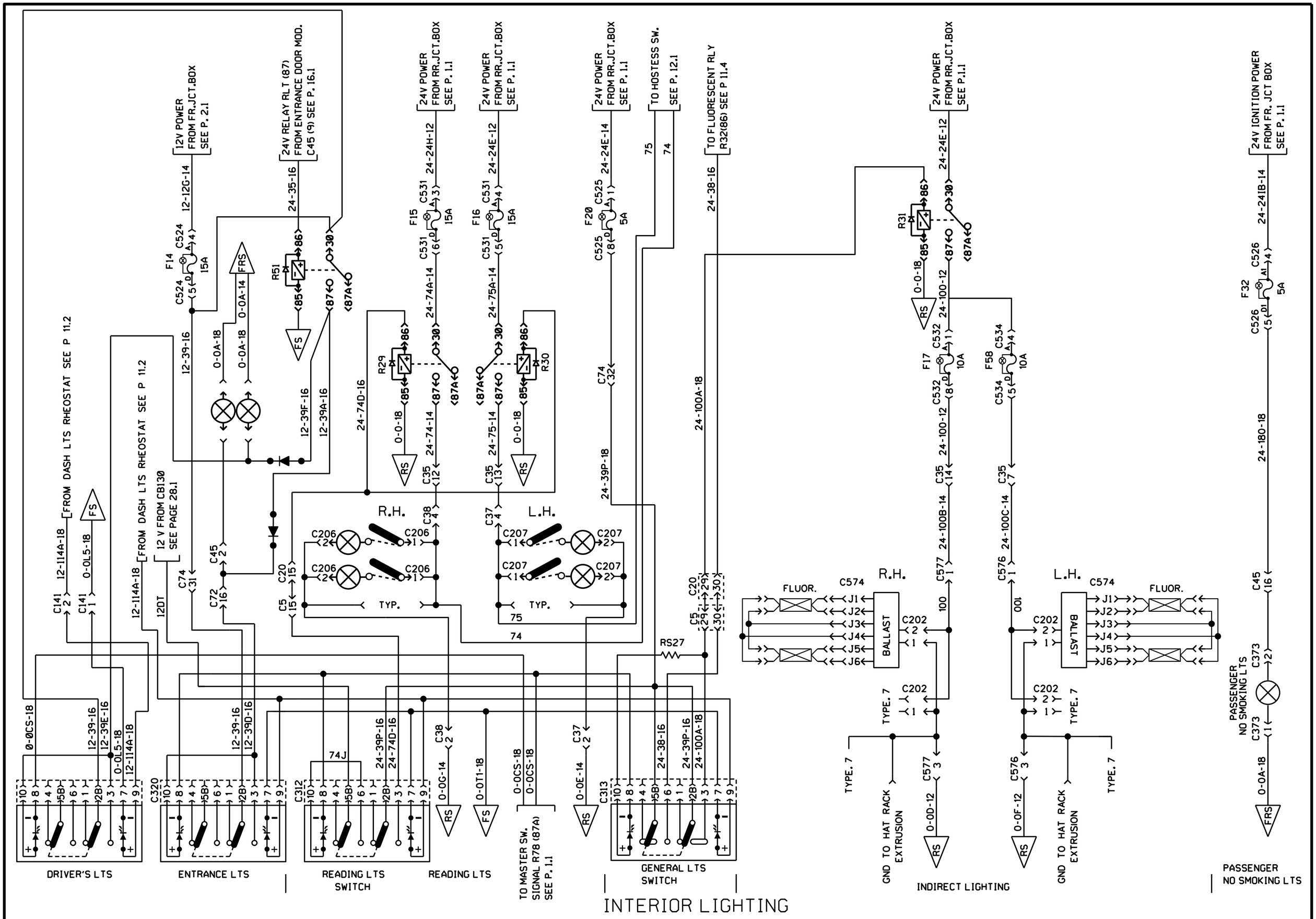

INTERIOR LIGHTING

PREVOST	WIRING DIAGRAM	NO: D060902	PAGE: 11.3 sp1	REVISION 00

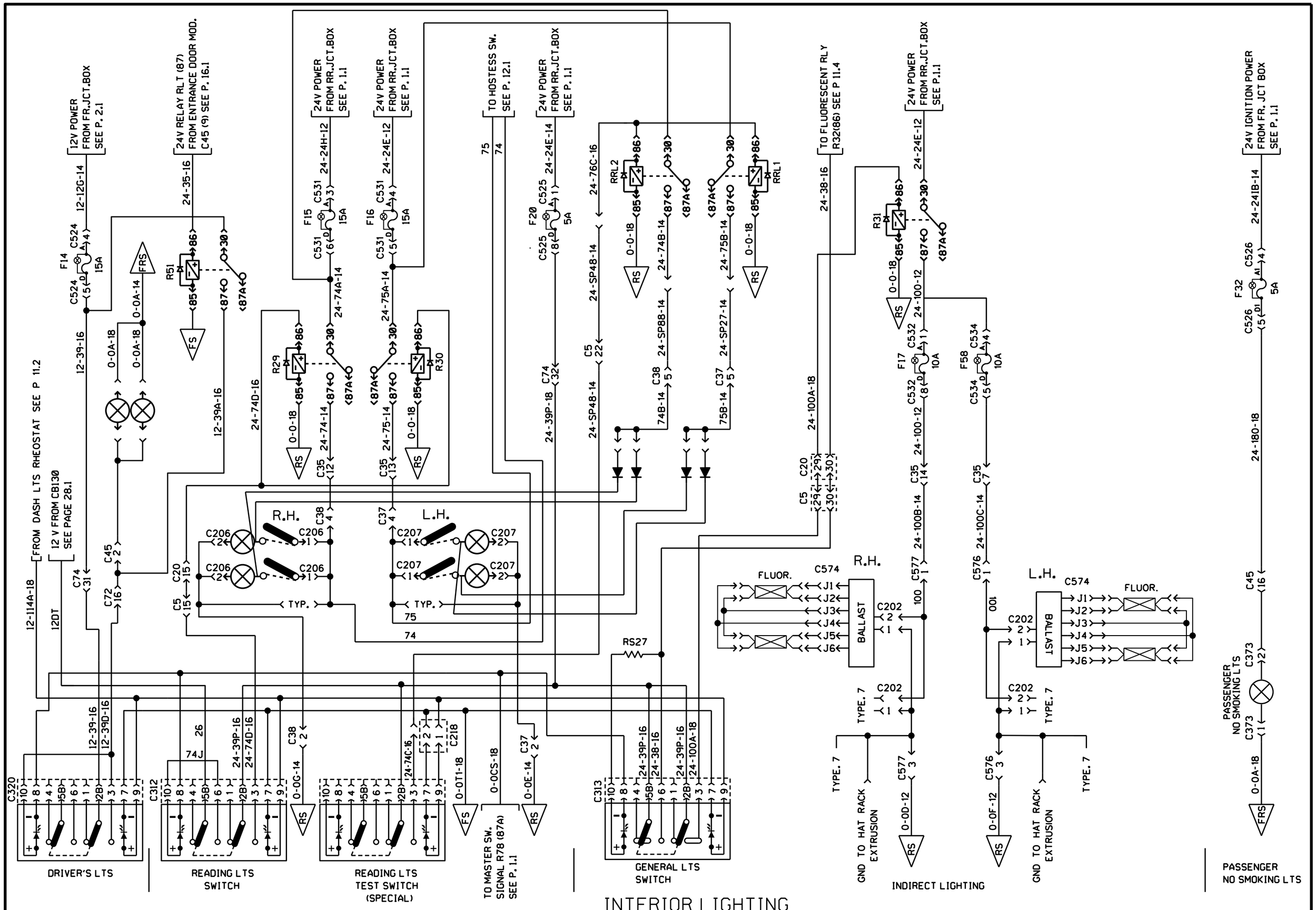

PREVOST	WIRING DIAGRAM	NO: D060902	PAGE: 11.3 sp2	REVISION 00

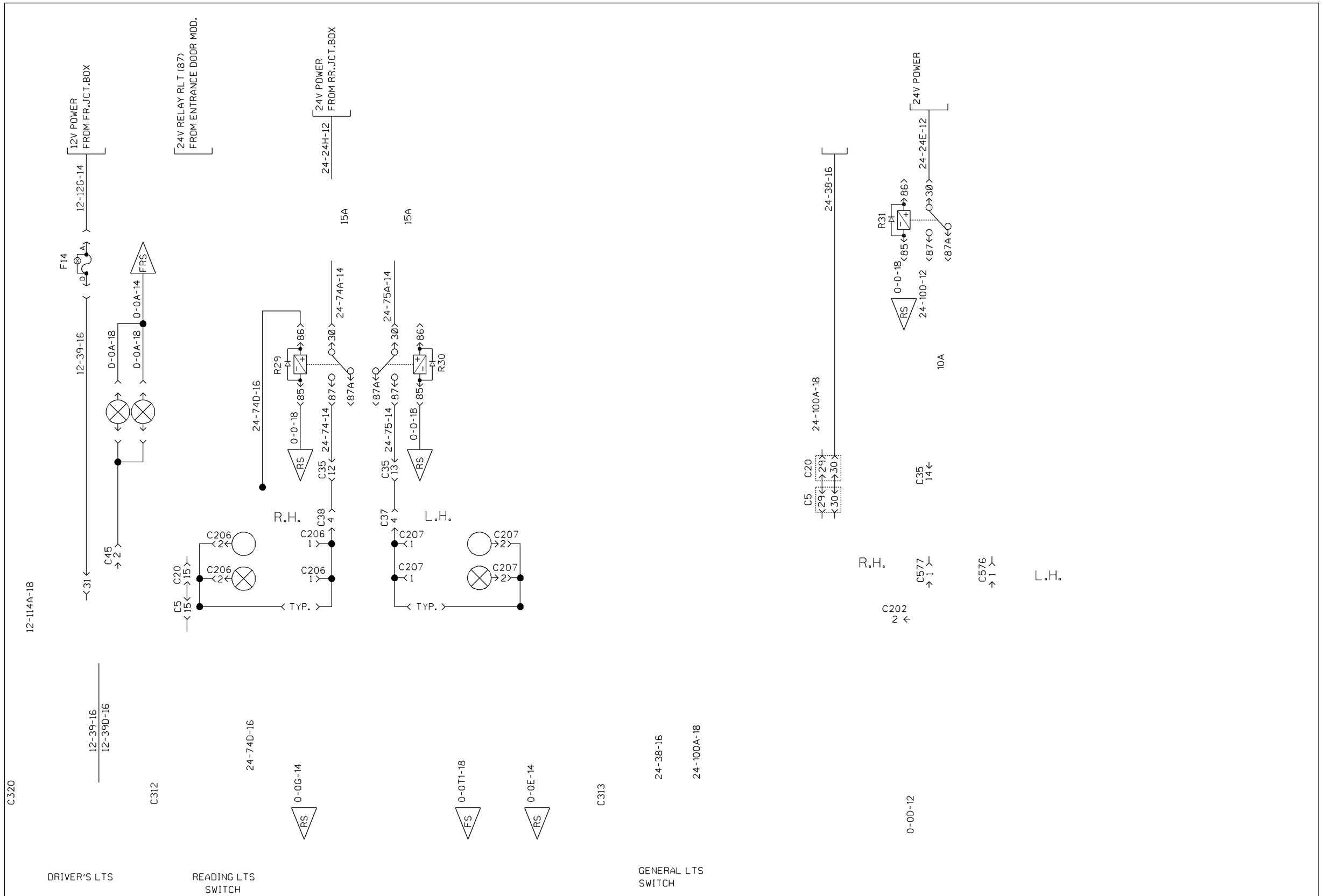

INTERIOR LIGHTING

NO: D060902

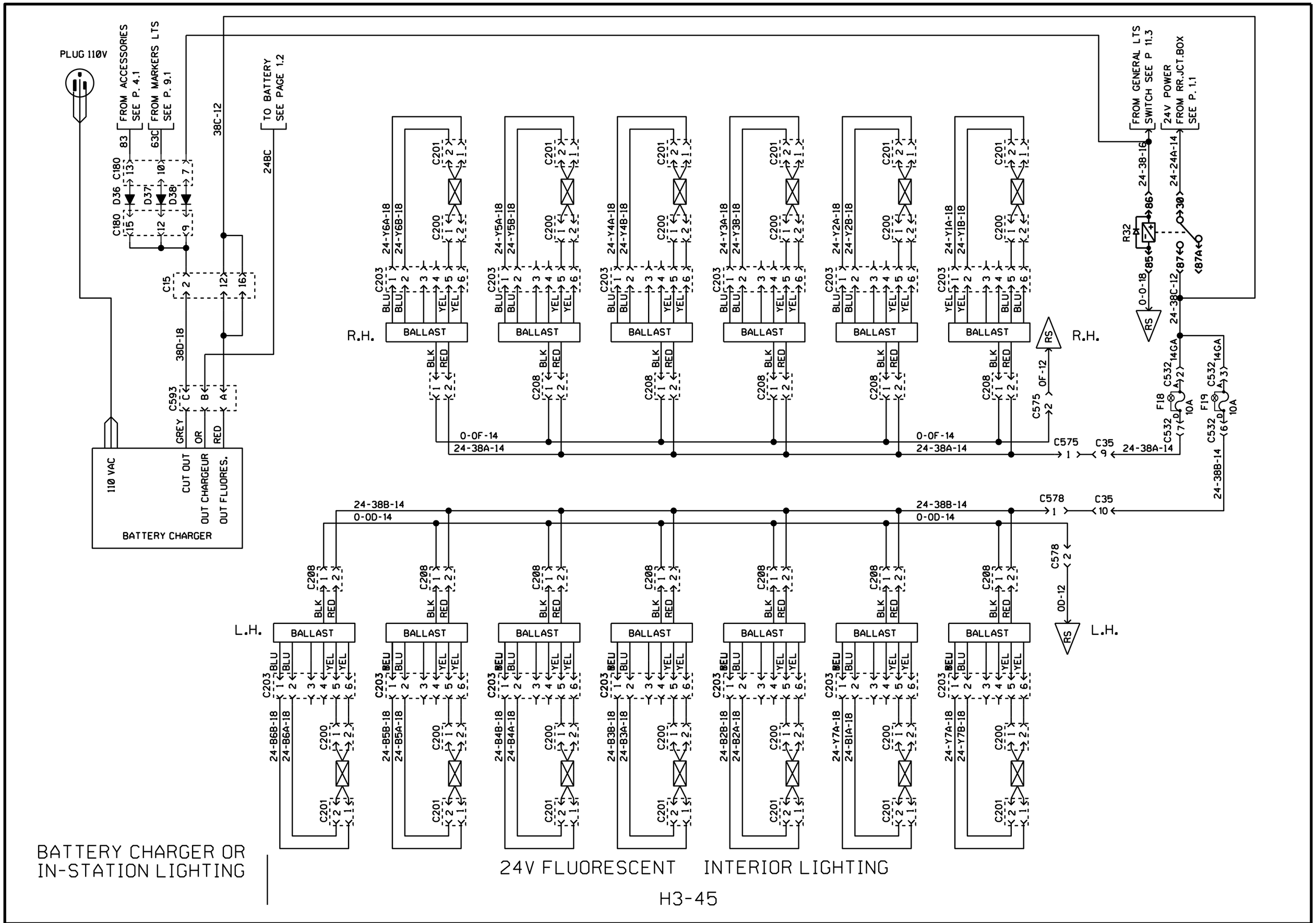

BATTERY CHARGER OR IN-STATION LIGHTING

24V FLUORESCENT INTERIOR LIGHTING

H3-45

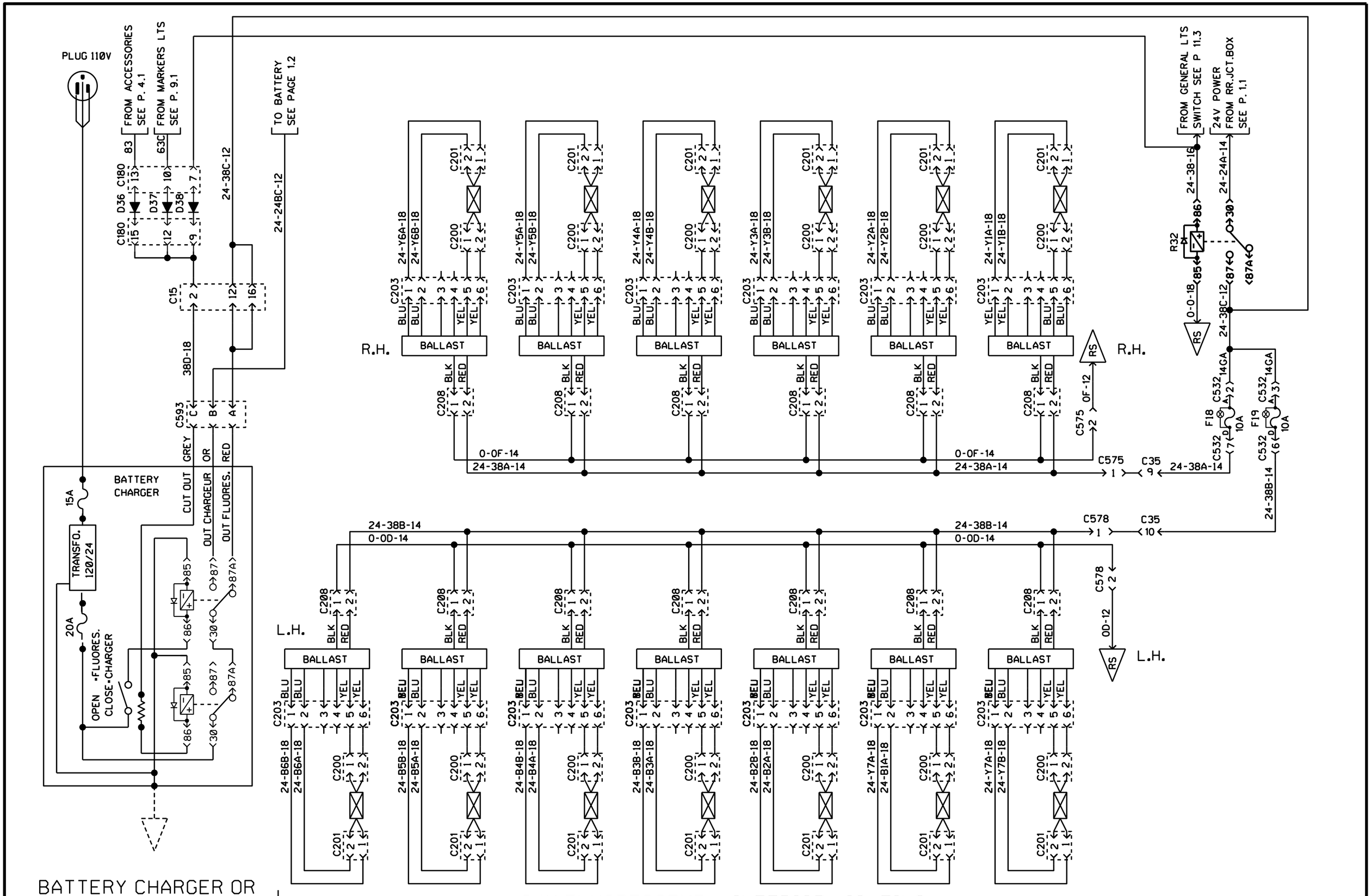
PLUG 110V
FROM ACCESSORIES SEE P. 4.1
FROM MARKERS LTS SEE P. 9.1
TO BATTERY SEE PAGE 1.2
FROM GENERAL LTS SWITCH SEE P 11.3
24V POWER FROM RR.JCT.BOX SEE P. 1.1
BATTERY CHARGER
TRANSFO. 120/24
CUT OUT
OUT CHARGEUR
OUT FLUORES.
OPEN -FLUORES.
CLOSE-CHARGER
R.H.
L.H.
BALLAST
24-38C-12
24-24BC-12
24-38-16
24-24A-14
0-0F-14
24-38A-14
24-38B-14
0-0D-14
BATTERY CHARGER OR IN-STATION LIGHTING
24V FLUORESCENT INTERIOR LIGHTING
H3-45

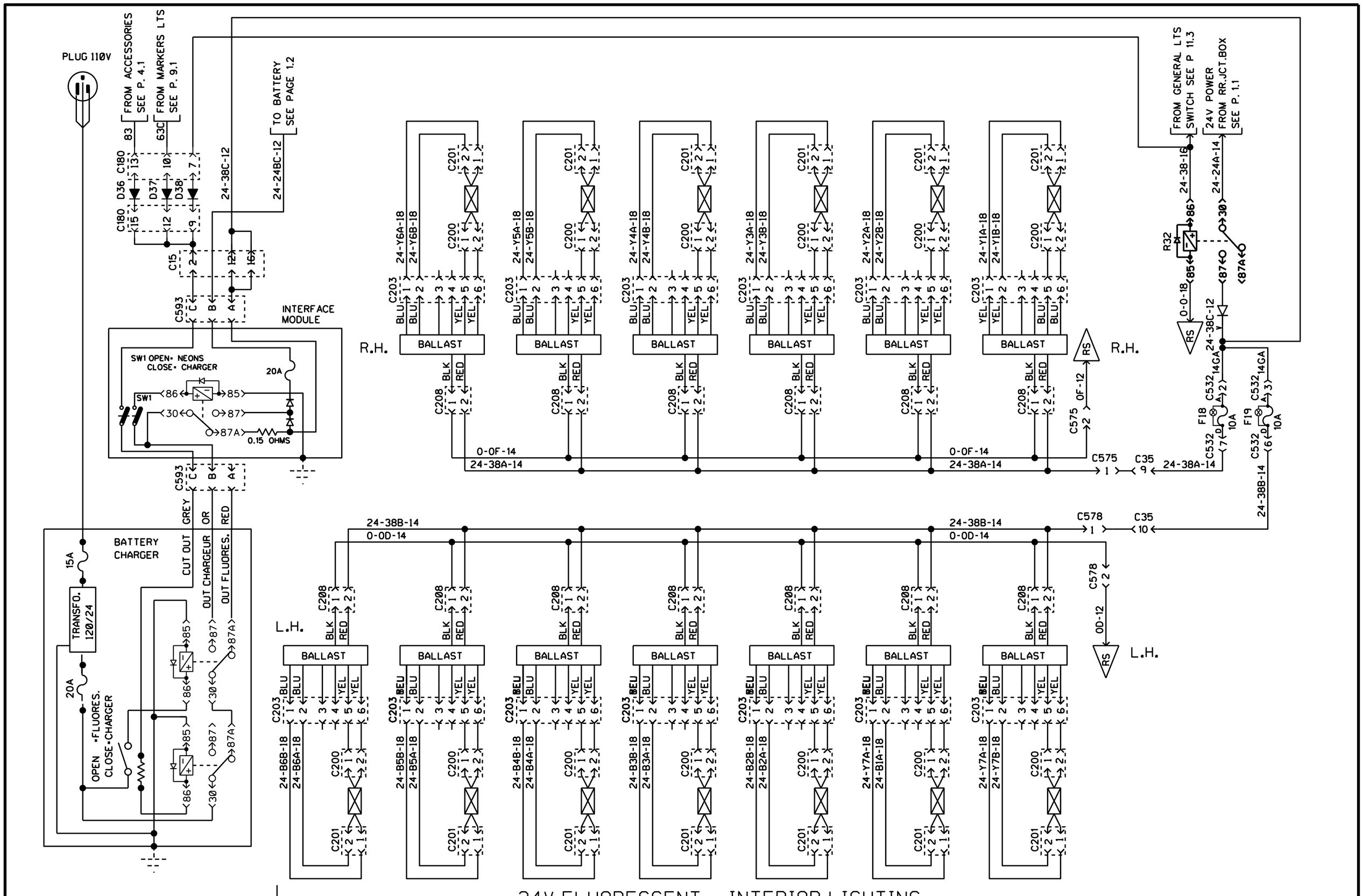

BATTERY CHARGER OR IN-STATION LIGHTING

24V FLUORESCENT INTERIOR LIGHTING

H3-45

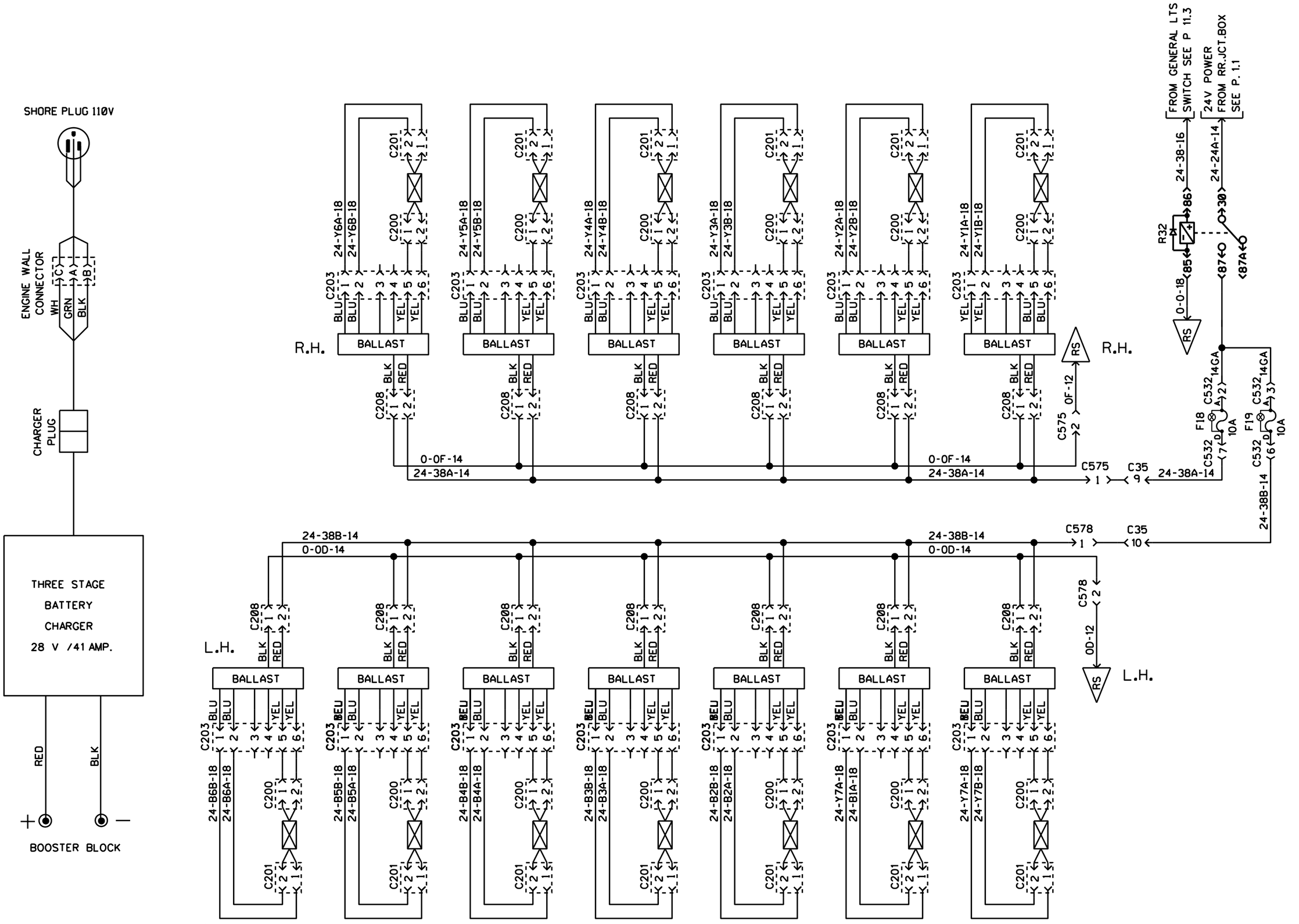

BATTERY CHARGER OR IN-STATION LIGHTING

24V FLUORESCENT INTERIOR LIGHTING

H3-45

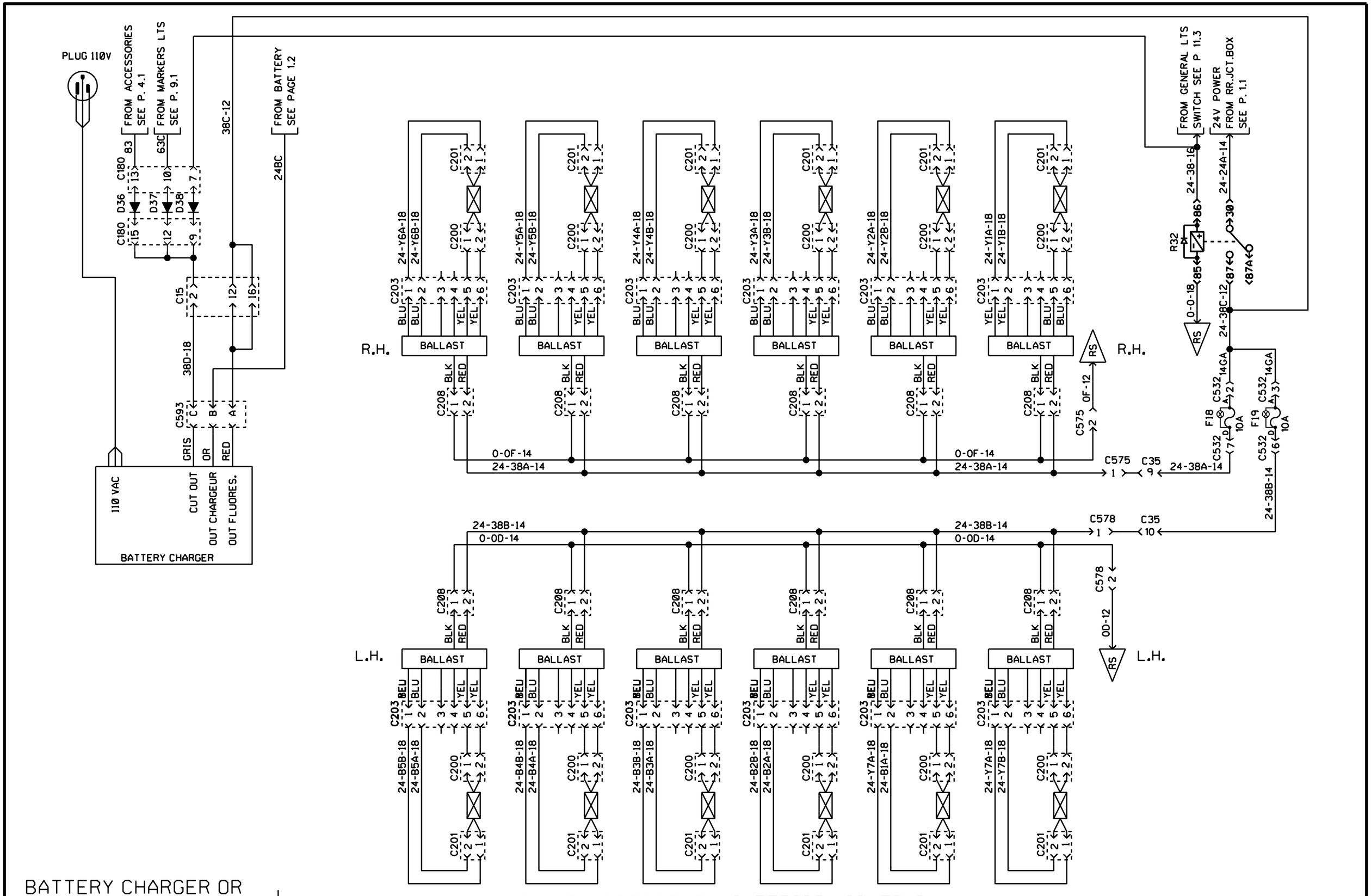

BATTERY CHARGER OR
IN-STATION LIGHTING

H3-41

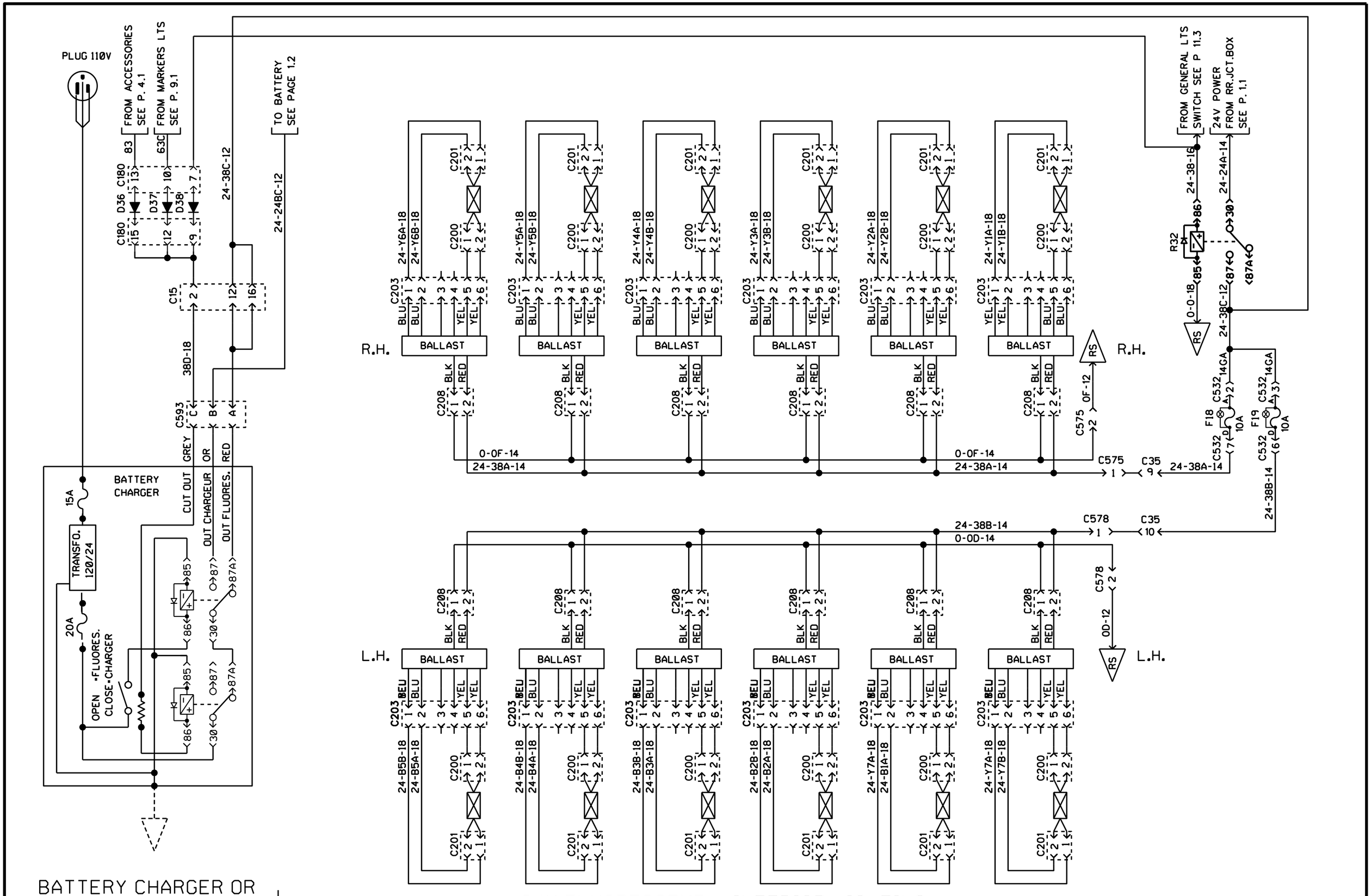

BATTERY CHARGER OR IN-STATION LIGHTING

24V FLUORESCENT INTERIOR LIGHTING

H3-45

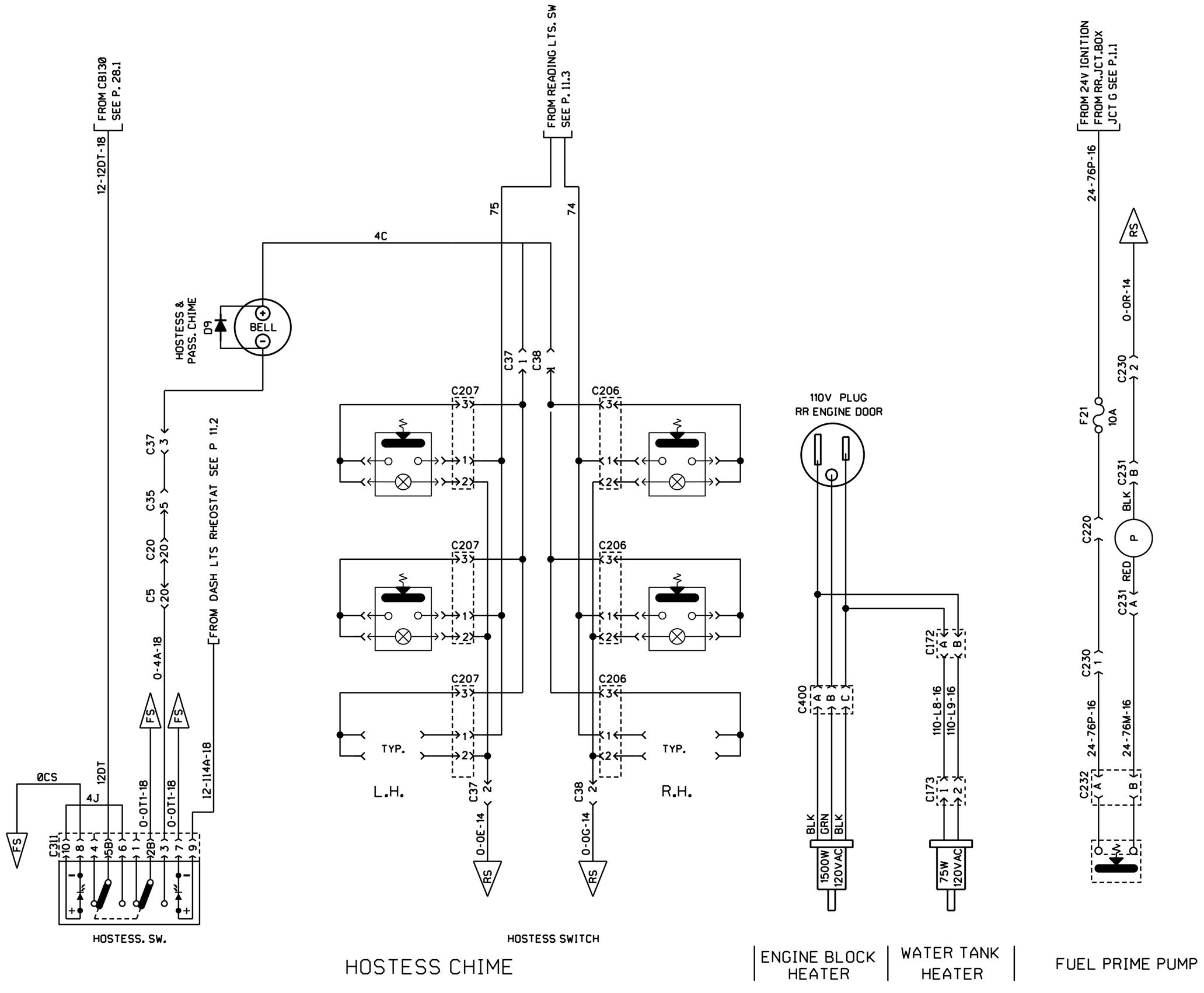

PREVOST	WIRING DIAGRAM	NO: D060902	PAGE: 12.1	REVISION 00

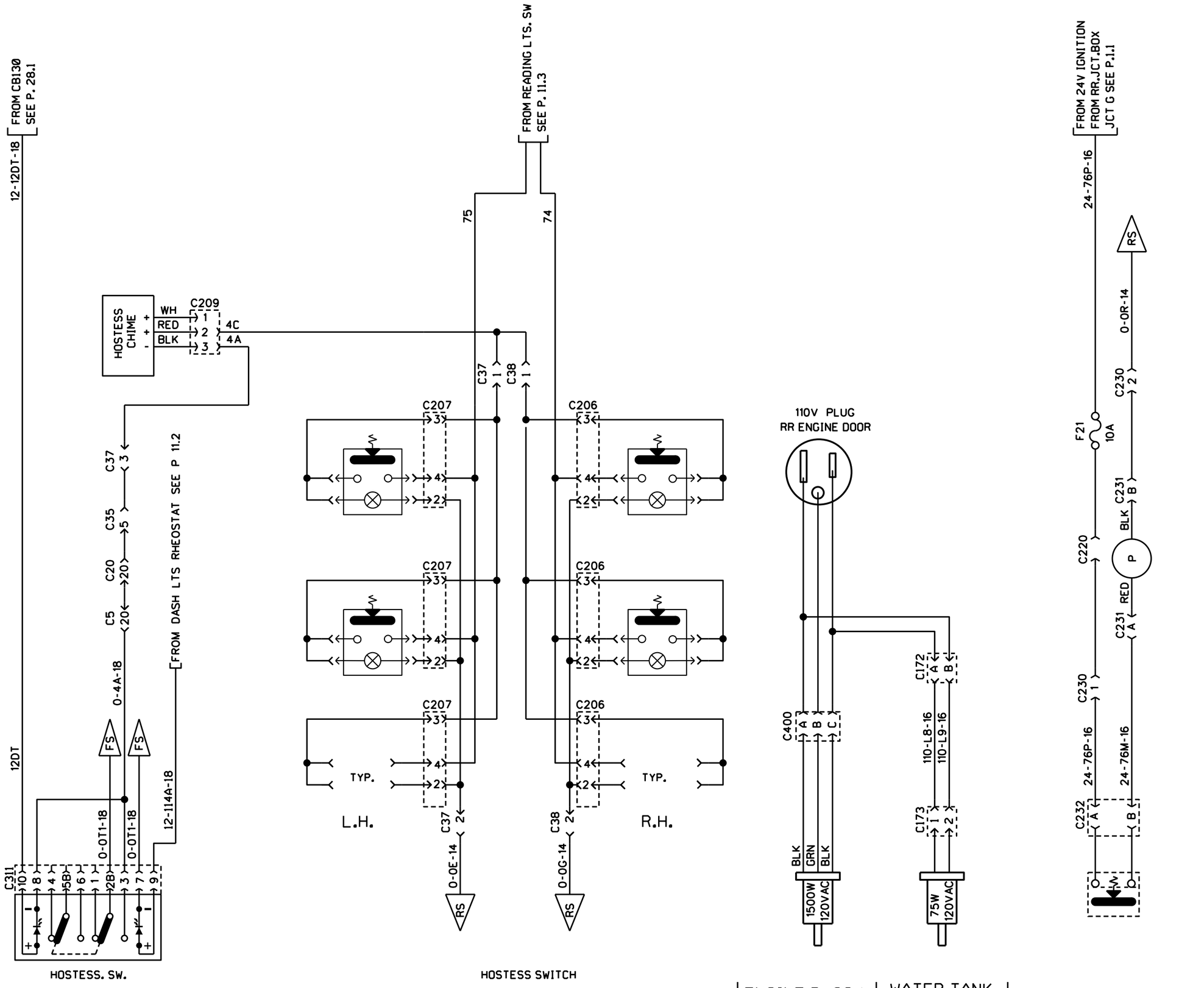

HOSTESS CHIME

ENGINE BLOCK HEATER

WATER TANK HEATER

FUEL PRIME PUMP

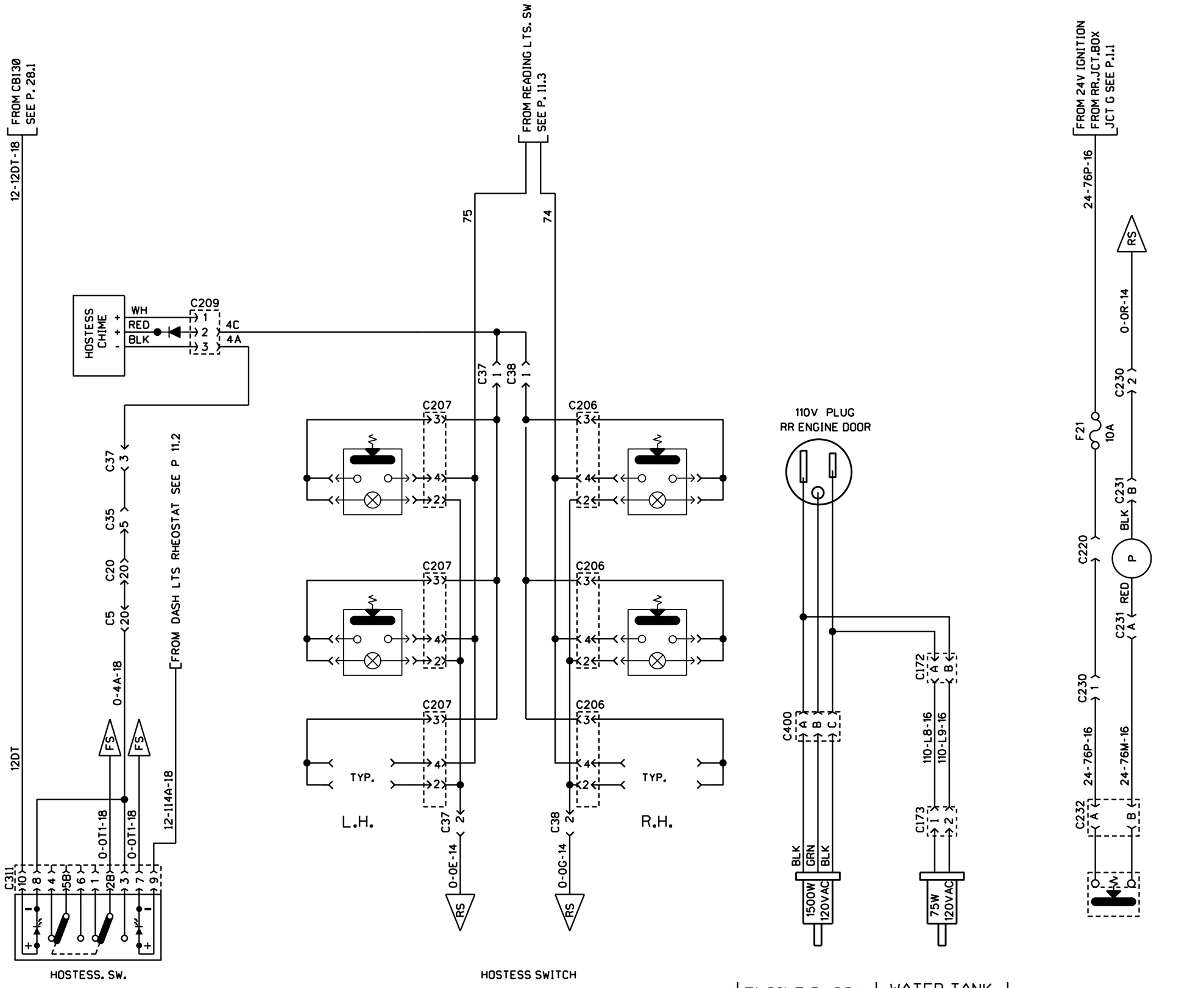

PREVOST	WIRING DIAGRAM	NO: D060902	PAGE: 12.1	REVISION 07

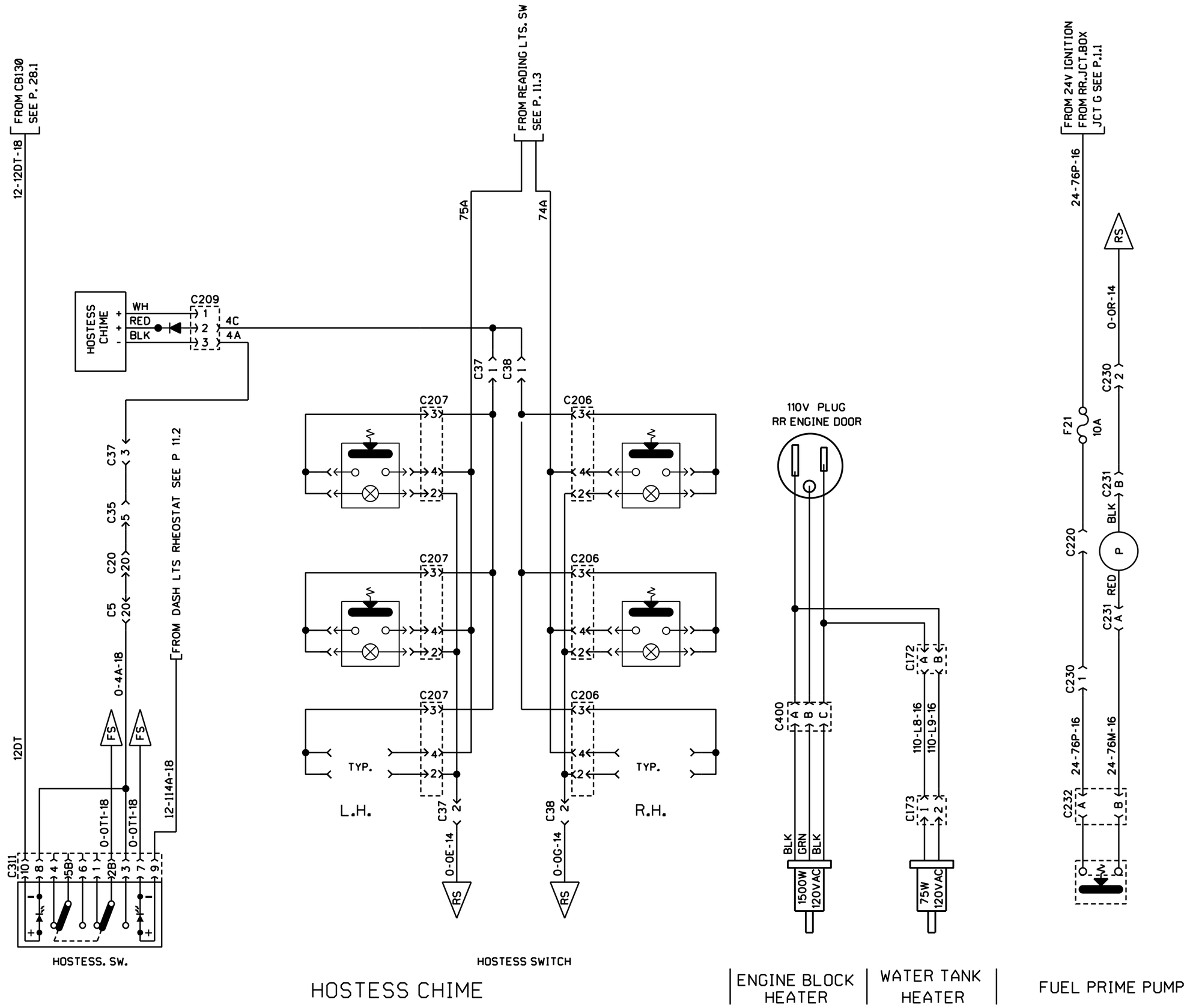

PREVOST	WIRING DIAGRAM	NO: D060902	PAGE: 12.1	REVISION 12

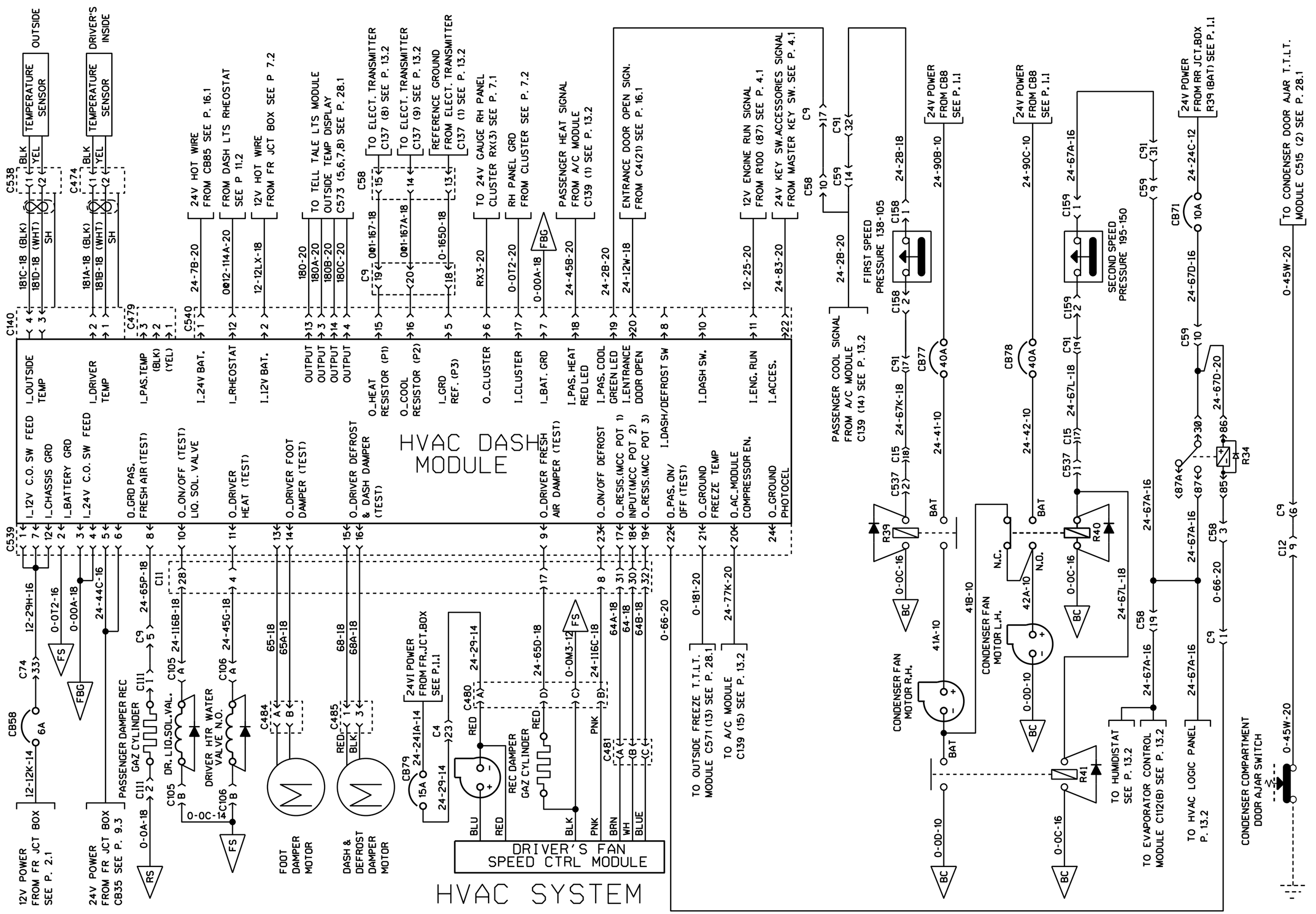

PREVOST	WIRING DIAGRAM	NO: D060902	PAGE: 13.1	REVISION 00

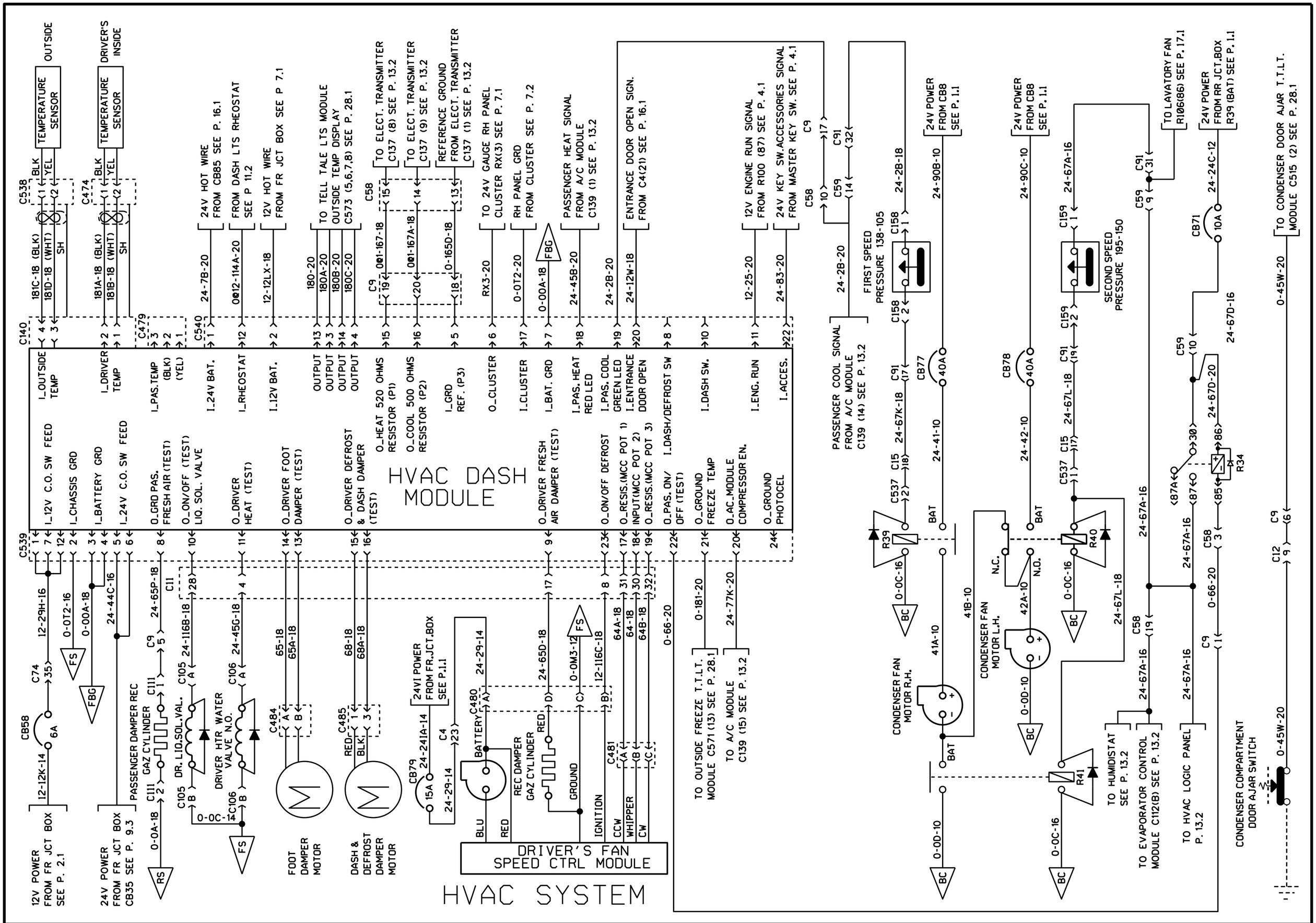

PREVOST	WIRING DIAGRAM	NO: D060902	PAGE: 13.1	REVISION 01

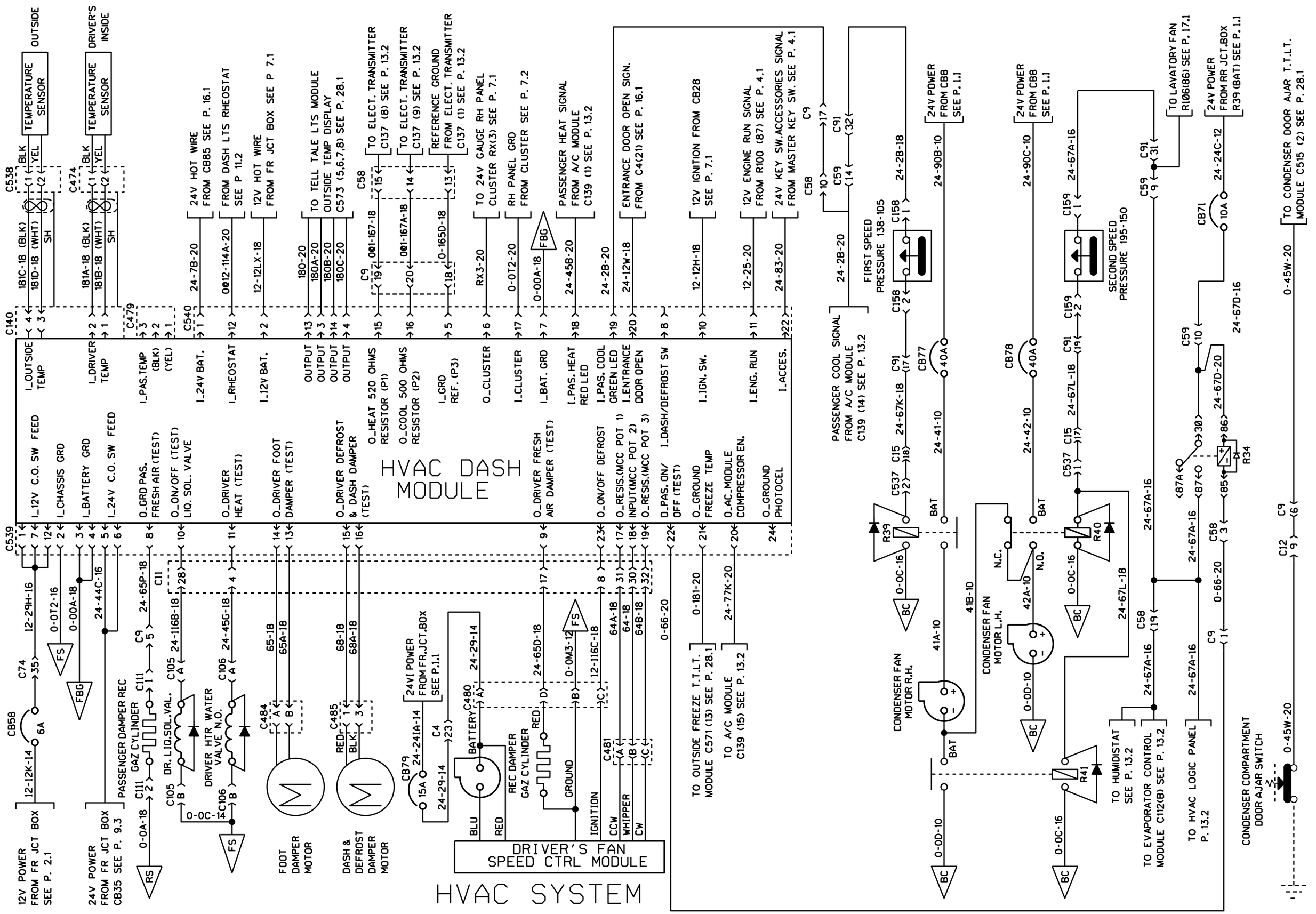
HVAC DASH MODULE
HVAC SYSTEM
DRIVER'S FAN SPEED CTRL MODULE
TEMPERATURE SENSOR
OUTSIDE
DRIVER'S INSIDE
I_OUTSIDE TEMP
I_DRIVER TEMP
I_PAS.TEMP (BLK) (YEL)
I_24V BAT.
I_RHEOSTAT
I_12V BAT.
OUTPUT
I_HEAT 520 OHMS RESISTOR (P1)
I_COOL 500 OHMS RESISTOR (P2)
I_GRD REF. (P3)
O_CLUSTER
I_CLUSTER
I_BAT. GRD
I_PAS. HEAT RED LED
I_PAS. COOL GREEN LED
I_ENTRANCE DOOR OPEN
I_DASH/DEFROST SW
I_IGN. SW.
I_ENG. RUN
I_ACCES.
I_12V C.O. SW FEED
I_CHASSIS GRD
I_BATTERY GRD
I_24V C.O. SW FEED
O_GRD PAS. FRESH AIR (TEST)
O_ON/OFF (TEST) LIQ. SOL. VALVE
O_DRIVER HEAT (TEST)
O_DRIVER FOOT DAMPER (TEST)
O_DRIVER DEFROST & DASH DAMPER (TEST)
O_DRIVER FRESH AIR DAMPER (TEST)
O_ON/OFF DEFROST
O_RESIS.(MCC POT 1) INPUT(MCC POT 2)
O_RESIS.(MCC POT 3)
O_PAS. ON/ OFF (TEST)
O_GROUND FREEZE TEMP
O_AC_MODULE COMPRESSOR EN.
O_GROUND PHOTOCEL
24V HOT WIRE FROM CB85 SEE P. 16.1
FROM DASH LTS RHEOSTAT SEE P 11.2
12V HOT WIRE FROM FR JCT BOX SEE P 7.1
TO TELL TALE LTS MODULE OUTSIDE TEMP DISPLAY C573 (5,6,7,8) SEE P. 28.1
TO ELECT. TRANSMITTER C137 (8) SEE P. 13.2
TO ELECT. TRANSMITTER C137 (9) SEE P. 13.2
REFERENCE GROUND FROM ELECT. TRANSMITTER C137 (1) SEE P. 13.2
TO 24V GAUGE RH PANEL CLUSTER RX(3) SEE P. 7.1
RH PANEL GRD FROM CLUSTER SEE P. 7.2
PASSENGER HEAT SIGNAL FROM A/C MODULE C139 (1) SEE P. 13.2
ENTRANCE DOOR OPEN SIGN. FROM C4(21) SEE P. 16.1
12V IGNITION FROM CB28 SEE P. 7.1
12V ENGINE RUN SIGNAL FROM R100 (87) SEE P. 4.1
24V KEY SW.ACCESSORIES SIGNAL FROM MASTER KEY SW. SEE P. 4.1
PASSENGER COOL SIGNAL FROM A/C MODULE C139 (14) SEE P. 13.2
FIRST SPEED PRESSURE 138-105
SECOND SPEED PRESSURE 195-150
24V POWER FROM CB8 SEE P. 1.1
TO LAVATORY FAN R106(86) SEE P. 17.1
24V POWER FROM RR JCT.BOX R39 (BAT) SEE P. 1.1
TO CONDENSER DOOR AJAR T.T.L.T. MODULE C515 (2) SEE P. 28.1
12V POWER FROM FR JCT BOX SEE P. 2.1
24V POWER FROM FR JCT BOX CB35 SEE P. 9.3
PASSENGER DAMPER REC GAZ CYLINDER
DR. LIQ.SOL.VAL.
DRIVER HTR WATER VALVE N.O.
FOOT DAMPER MOTOR
DASH & DEFROST DAMPER MOTOR
24VI POWER FROM FR.JCT.BOX SEE P.1.1
BATTERY
REC DAMPER GAZ CYLINDER
GROUND
IGNITION
CCW
WHIPPER
CW
BLU
RED
TO OUTSIDE FREEZE T.T.L.T. MODULE C571 (13) SEE P. 28.1
TO A/C MODULE C139 (15) SEE P. 13.2
CONDENSER FAN MOTOR R.H.
CONDENSER FAN MOTOR L.H.
N.C.
N.O.
TO HUMIDISTAT SEE P. 13.2
TO EVAPORATOR CONTROL MODULE C112(B) SEE P. 13.2
TO HVAC LOGIC PANEL P. 13.2
CONDENSER COMPARTMENT DOOR AJAR SWITCH

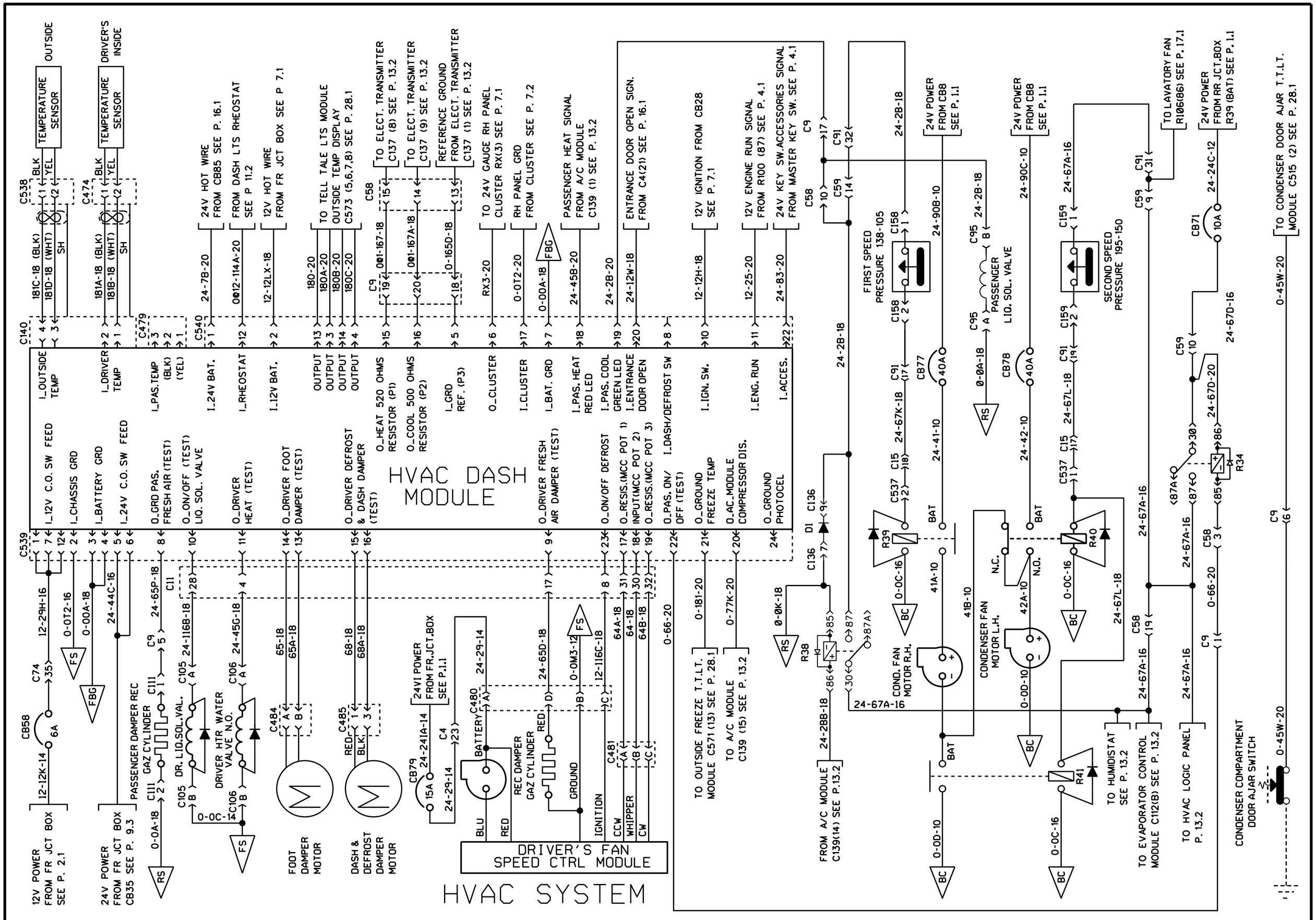
HVAC DASH MODULE
HVAC SYSTEM
DRIVER'S FAN SPEED CTRL MODULE
I_OUTSIDE TEMP
I_DRIVER TEMP
I_PAS.TEMP (BLK) (YEL)
I_24V BAT.
I_RHEOSTAT
I_12V BAT.
OUTPUT
O_HEAT RESISTOR 520 OHMS (P1)
O_COOL RESISTOR 500 OHMS (P2)
I_GRD REF. (P3)
O_CLUSTER
I_CLUSTER
I_BAT. GRD
I_PAS. HEAT RED LED
I_PAS. COOL GREEN LED
I_ENTRANCE DOOR OPEN
I_DASH/DEFROST SW
I_IGN. SW.
I_ENG. RUN
I_ACCES.
I_12V C.O. SW FEED
I_CHASSIS GRD
I_BATTERY GRD
I_24V C.O. SW FEED
O_GRD PAS. FRESH AIR (TEST)
O_ON/OFF (TEST) LIQ. SOL. VALVE
O_DRIVER HEAT (TEST)
O_DRIVER FOOT DAMPER (TEST)
O_DRIVER DEFROST & DASH DAMPER (TEST)
O_DRIVER FRESH AIR DAMPER (TEST)
O_ON/OFF DEFROST
O_RESIS.(MCC POT 1) INPUT(MCC POT 2)
O_RESIS.(MCC POT 3)
O_PAS. ON/ OFF (TEST)
O_GROUND FREEZE TEMP
O_AC.MODULE COMPRESSOR DIS.
O_GROUND PHOTOCEL
TEMPERATURE SENSOR
OUTSIDE
DRIVER'S INSIDE
24V HOT WIRE FROM CB85 SEE P. 16.1
FROM DASH LTS RHEOSTAT SEE P 11.2
12V HOT WIRE FROM FR JCT BOX SEE P 7.1
TO TELL TALE LTS MODULE OUTSIDE TEMP DISPLAY C573 (5,6,7,8) SEE P. 28.1
TO ELECT. TRANSMITTER C137 (8) SEE P. 13.2
TO ELECT. TRANSMITTER C137 (9) SEE P. 13.2
REFERENCE GROUND FROM ELECT. TRANSMITTER C137 (1) SEE P. 13.2
TO 24V GAUGE RH PANEL CLUSTER RX(3) SEE P. 7.1
RH PANEL GRD FROM CLUSTER SEE P. 7.2
PASSENGER HEAT SIGNAL FROM A/C MODULE C139 (1) SEE P. 13.2
ENTRANCE DOOR OPEN SIGN. FROM C4(21) SEE P. 16.1
12V IGNITION FROM CB28 SEE P. 7.1
12V ENGINE RUN SIGNAL FROM R100 (87) SEE P. 4.1
24V KEY SW.ACCESSORIES SIGNAL FROM MASTER KEY SW. SEE P. 4.1
FIRST SPEED PRESSURE 138-105
SECOND SPEED PRESSURE 195-150
24V POWER FROM CB8 SEE P. 1.1
PASSENGER LIQ. SOL. VALVE
TO LAVATORY FAN R106(86) SEE P. 17.1
24V POWER FROM RR JCT.BOX R39 (BAT) SEE P. 1.1
TO CONDENSER DOOR AJAR T.T.L.T. MODULE C515 (2) SEE P. 28.1
12V POWER FROM FR JCT BOX SEE P. 2.1
24V POWER FROM FR JCT BOX CB35 SEE P. 9.3
PASSENGER DAMPER REC GAZ CYLINDER
DR. LIQ.SOL.VAL.
DRIVER HTR WATER VALVE N.O.
FOOT DAMPER MOTOR
DASH & DEFROST DAMPER MOTOR
24V1 POWER FROM FR.JCT.BOX SEE P.1.1
BATTERY
REC DAMPER GAZ CYLINDER
GROUND
IGNITION
CCW
WHIPPER
CW
TO OUTSIDE FREEZE T.T.L.T. MODULE C571 (13) SEE P. 28.1
TO A/C MODULE C139 (15) SEE P. 13.2
FROM A/C MODULE C139(14) SEE P.13.2
COND. FAN MOTOR R.H.
CONDENSER FAN MOTOR L.H.
N.C.
N.O.
TO HUMIDISTAT SEE P. 13.2
TO EVAPORATOR CONTROL MODULE C112(B) SEE P. 13.2
TO HVAC LOGIC PANEL P. 13.2
CONDENSER COMPARTMENT DOOR AJAR SWITCH

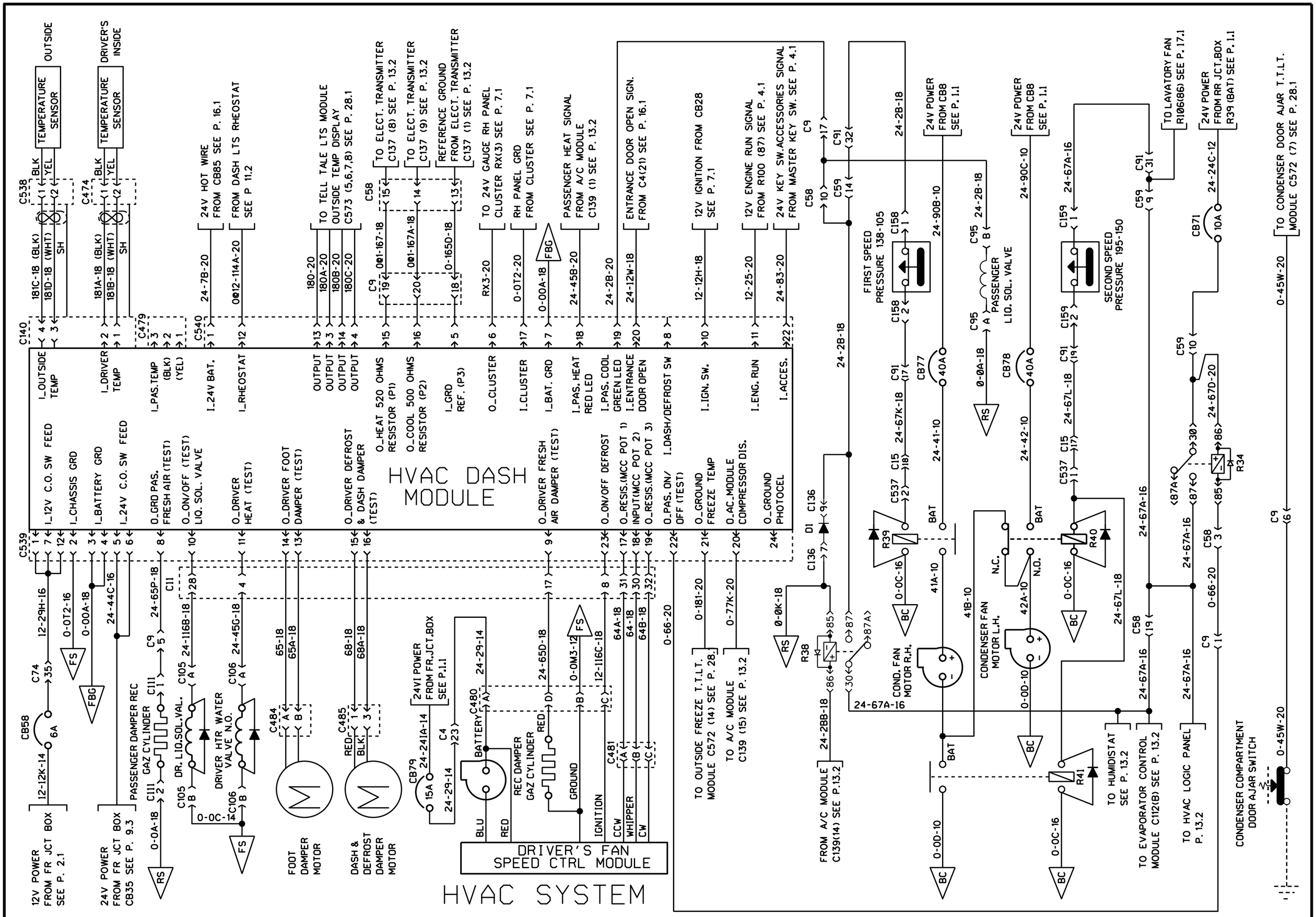

PREVOST	WIRING DIAGRAM	NO: D060902	PAGE: 13.1	REVISION 08

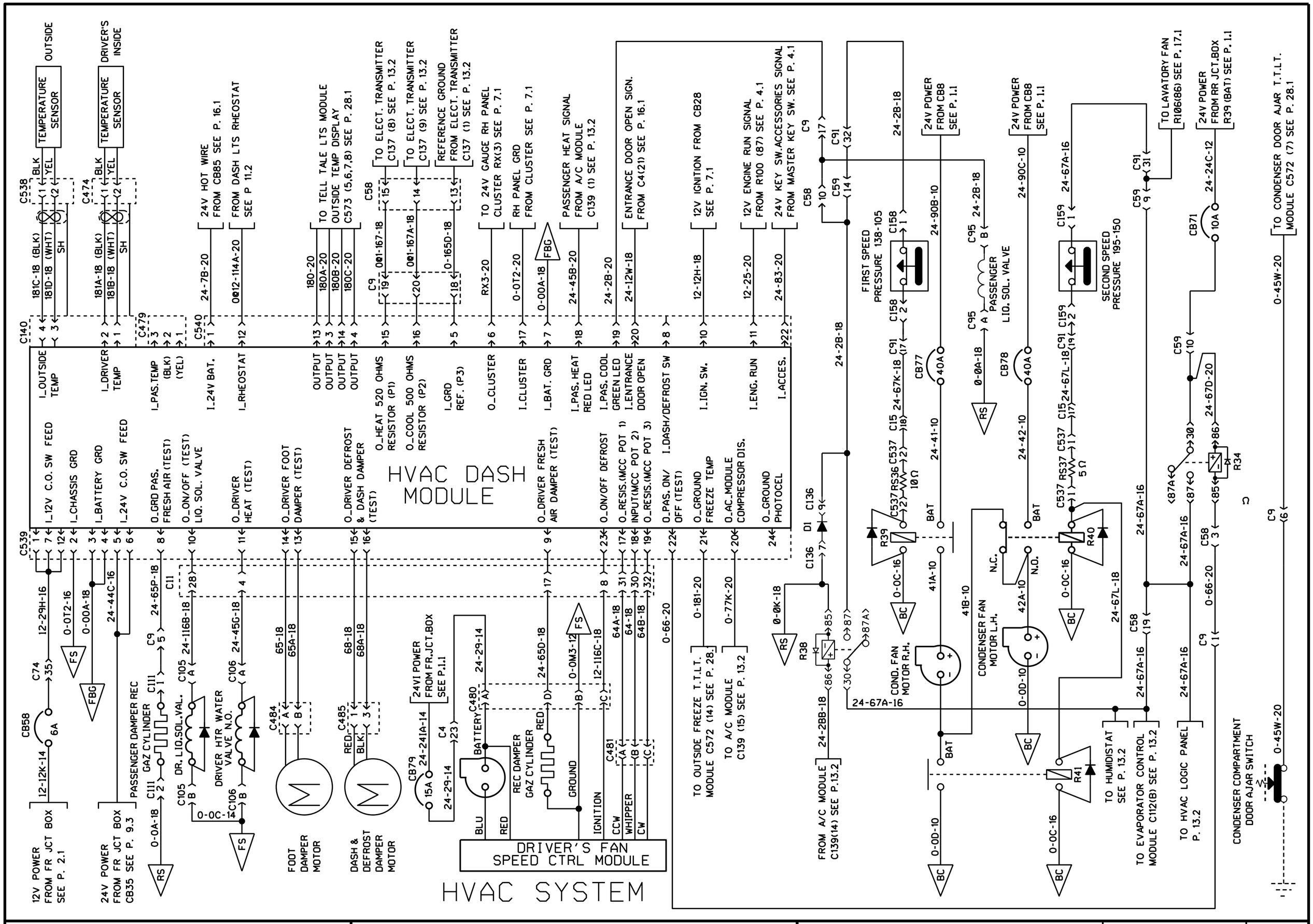

PREVOST	WIRING DIAGRAM	NO: D060902	PAGE: 13.1	REVISION 14

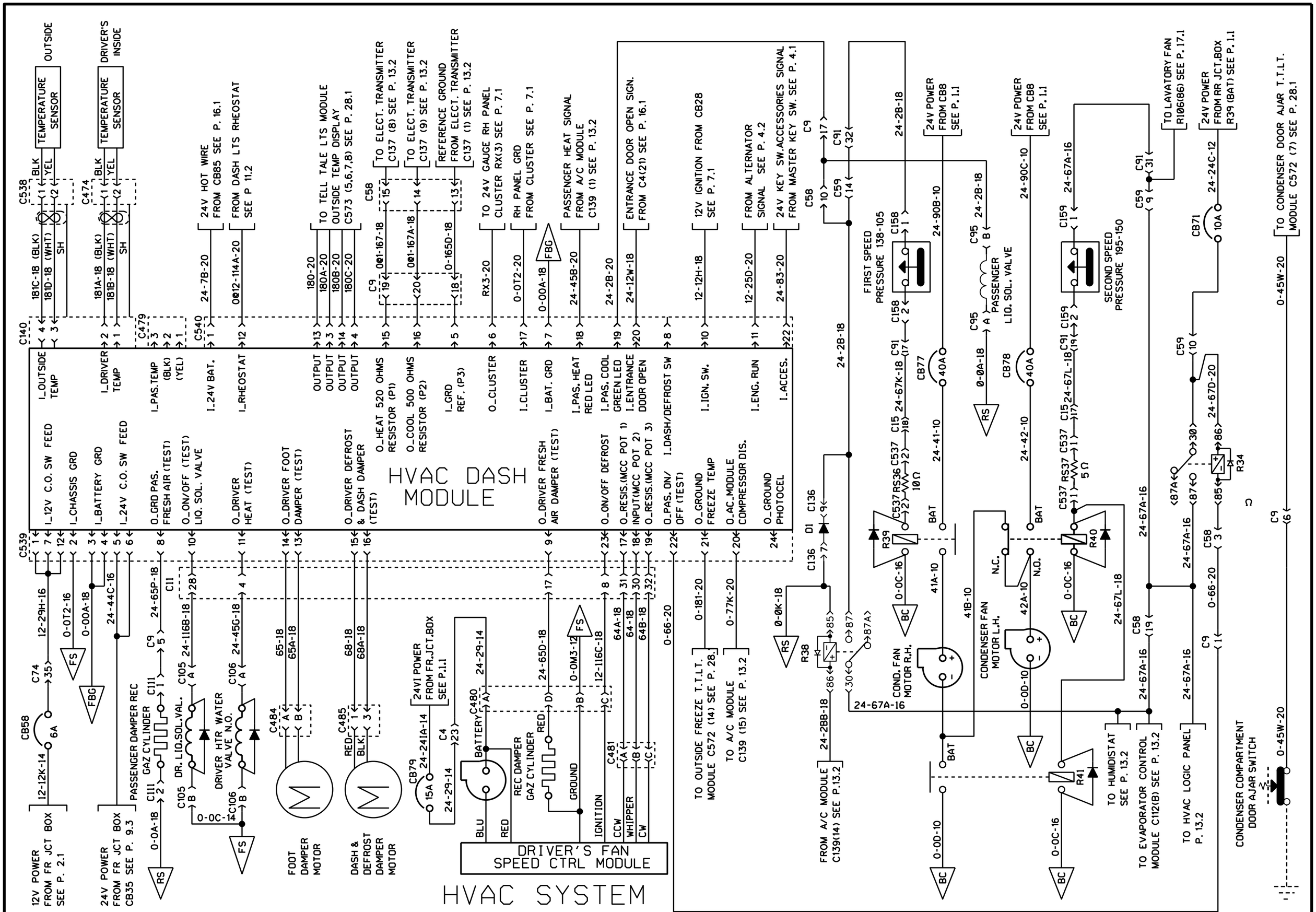

PREVOST	WIRING DIAGRAM	NO: D060902	PAGE: 13.1	REVISION 16

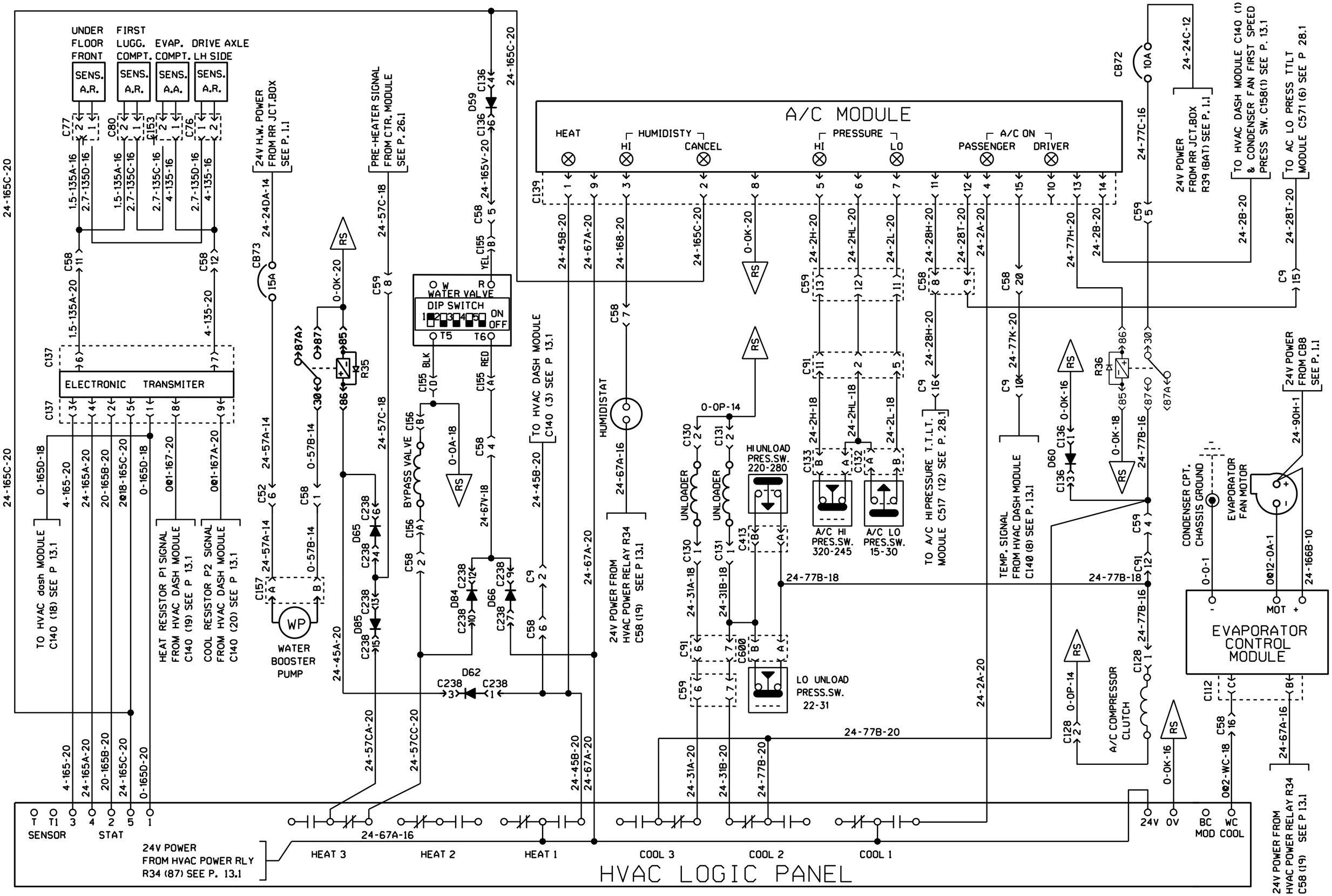

HVAC SYSTEM

PREVOST	WIRING DIAGRAM	NO: D060902	PAGE: 13.2	REVISION 00

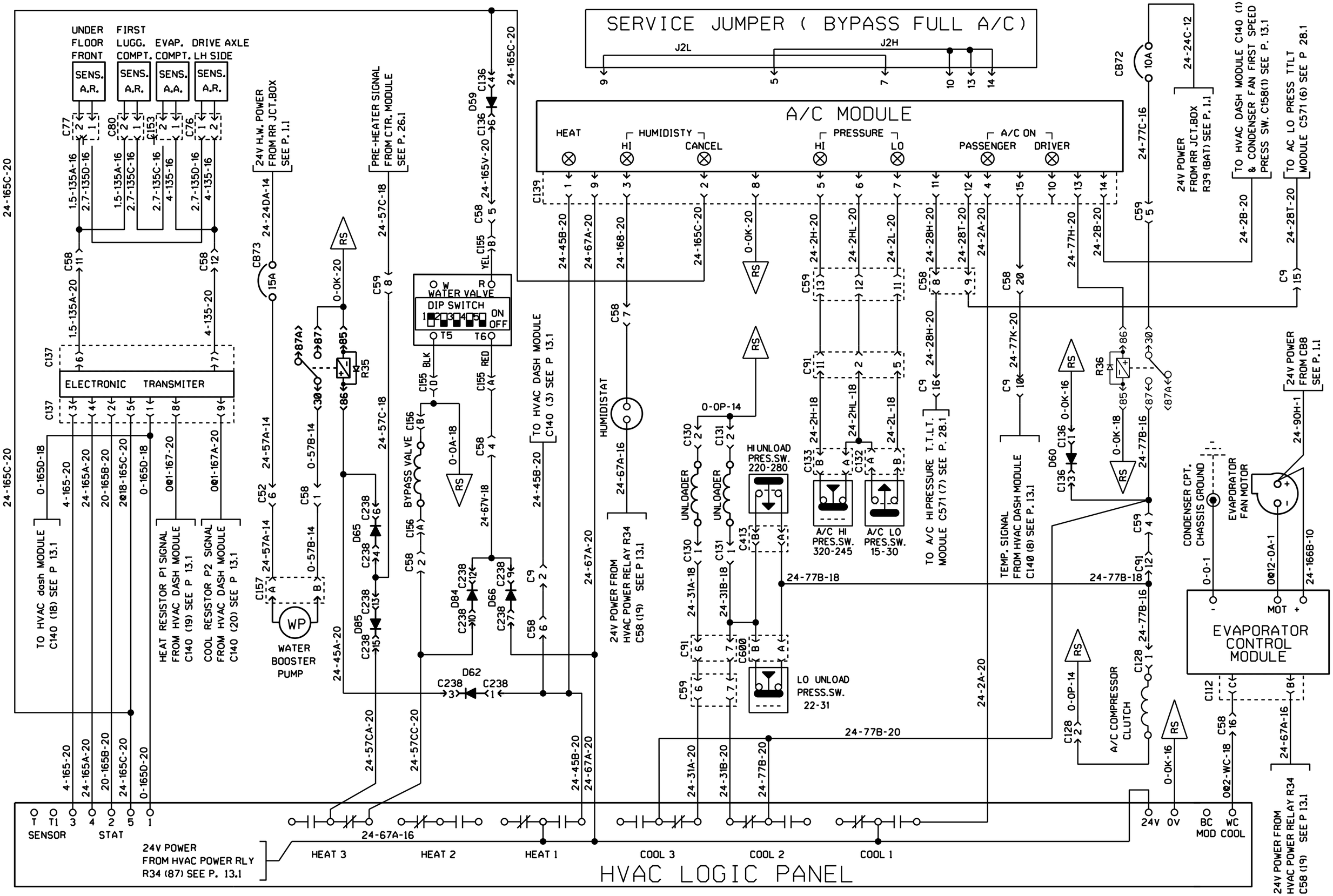
SERVICE JUMPER (BYPASS FULL A/C)
J2L
J2H
A/C MODULE
HEAT
HUMIDISTY
HI
CANCEL
PRESSURE
HI
LO
A/C ON
PASSENGER
DRIVER
UNDER FLOOR FRONT
FIRST LUGG. COMPT.
EVAP. COMPT.
DRIVE AXLE LH SIDE
SENS. A.R.
SENS. A.R.
SENS. A.A.
SENS. A.R.
ELECTRONIC TRANSMITER
WATER VALVE
DIP SWITCH
ON
OFF
BYPASS VALVE
WATER BOOSTER PUMP
HUMIDISTAT
UNLOADER
UNLOADER
HI UNLOAD PRES.SW. 220-280
A/C HI PRES.SW. 320-245
A/C LO PRES.SW. 15-30
LO UNLOAD PRESS.SW. 22-31
A/C COMPRESSOR CLUTCH
CONDENSER CPT. CHASSIS GROUND
EVAPORATOR FAN MOTOR
EVAPORATOR CONTROL MODULE
24V POWER FROM RR JCT.BOX R39 (BAT) SEE P. 1.1
TO HVAC DASH MODULE C140 (1) & CONDENSER FAN FIRST SPEED PRESS SW. C158(1) SEE P. 13.1
TO AC LO PRESS TTLT MODULE C571 (6) SEE P 28.1
24V POWER FROM CB8 SEE P. 1.1
24V H.W. POWER FROM RR JCT.BOX SEE P. 1.1
PRE-HEATER SIGNAL FROM CTR. MODULE SEE P. 26.1
TO HVAC dash MODULE C140 (18) SEE P 13.1
HEAT RESISTOR P1 SIGNAL FROM HVAC DASH MODULE C140 (19) SEE P 13.1
COOL RESISTOR P2 SIGNAL FROM HVAC DASH MODULE C140 (20) SEE P 13.1
TO HVAC DASH MODULE C140 (3) SEE P 13.1
24V POWER FROM HVAC POWER RELAY R34 C58 (19) SEE P 13.1
TO A/C HI PRESSURE T.T.LT. MODULE C571 (7) SEE P. 28.1
TEMP. SIGNAL FROM HVAC DASH MODULE C140 (8) SEE P. 13.1
24V POWER FROM HVAC POWER RLY R34 (87) SEE P. 13.1
24V POWER FROM HVAC POWER RELAY R34 C58 (19) SEE P 13.1
SENSOR
STAT
HEAT 3
HEAT 2
HEAT 1
COOL 3
COOL 2
COOL 1
24V
0V
MOD
COOL
HVAC LOGIC PANEL

HVAC SYSTEM

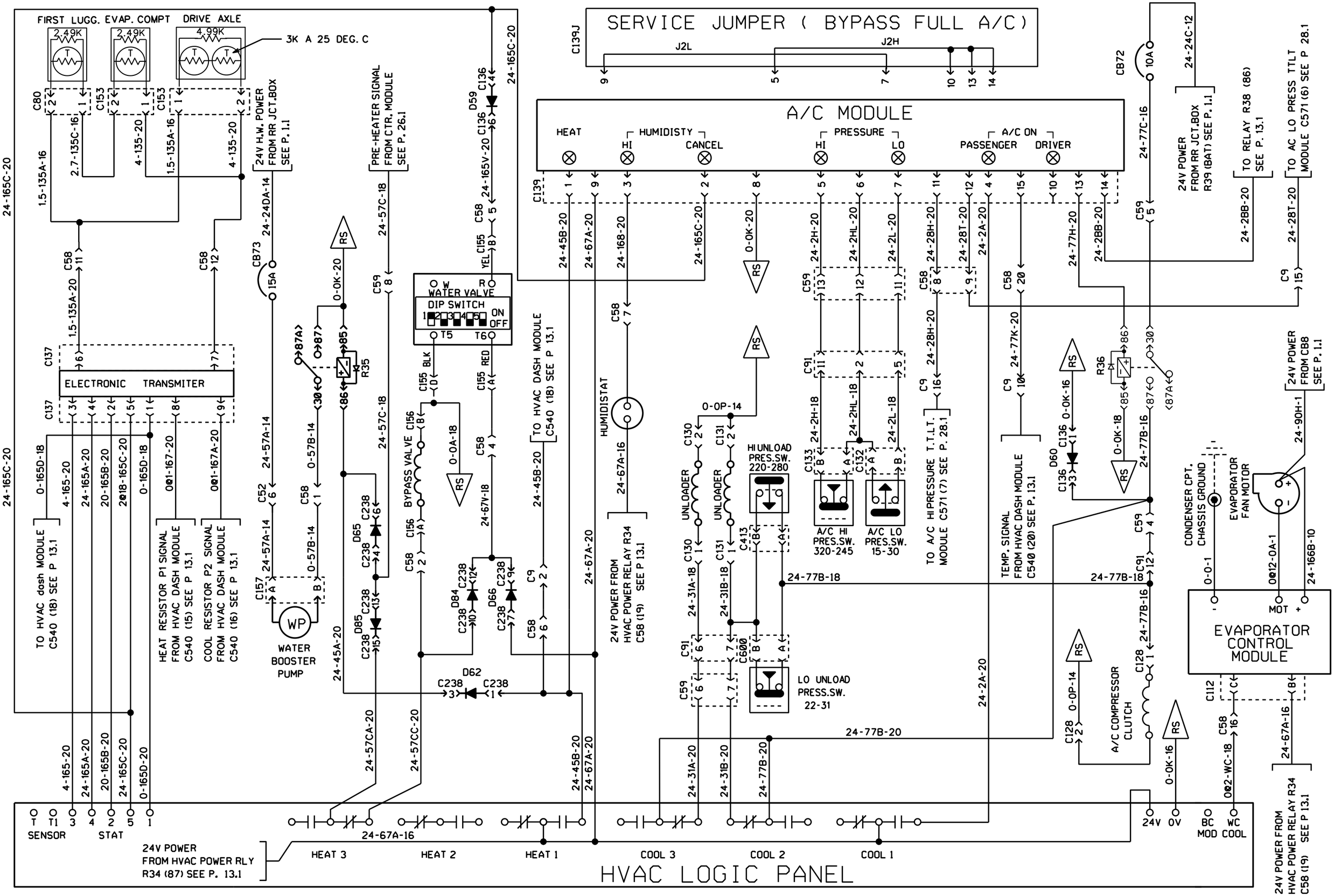

HVAC SYSTEM

PREVOST	WIRING DIAGRAM	NO: D060902	PAGE: 13.2	REVISION 06

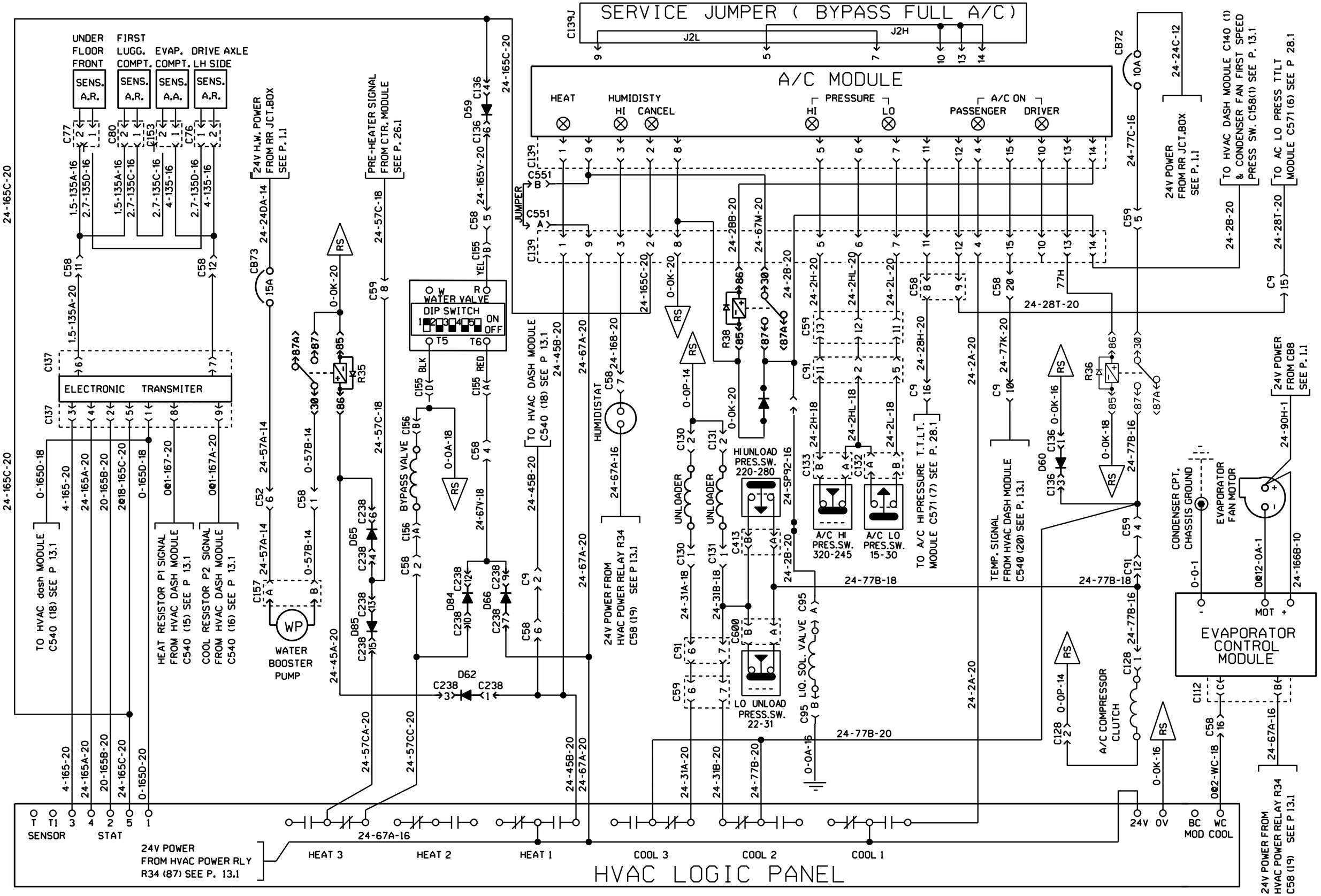

HVAC SYSTEM

EFF. W2285 TO W2457

PREVOST	WIRING DIAGRAM	NO: D060902	PAGE: 13.2	REVISION 13

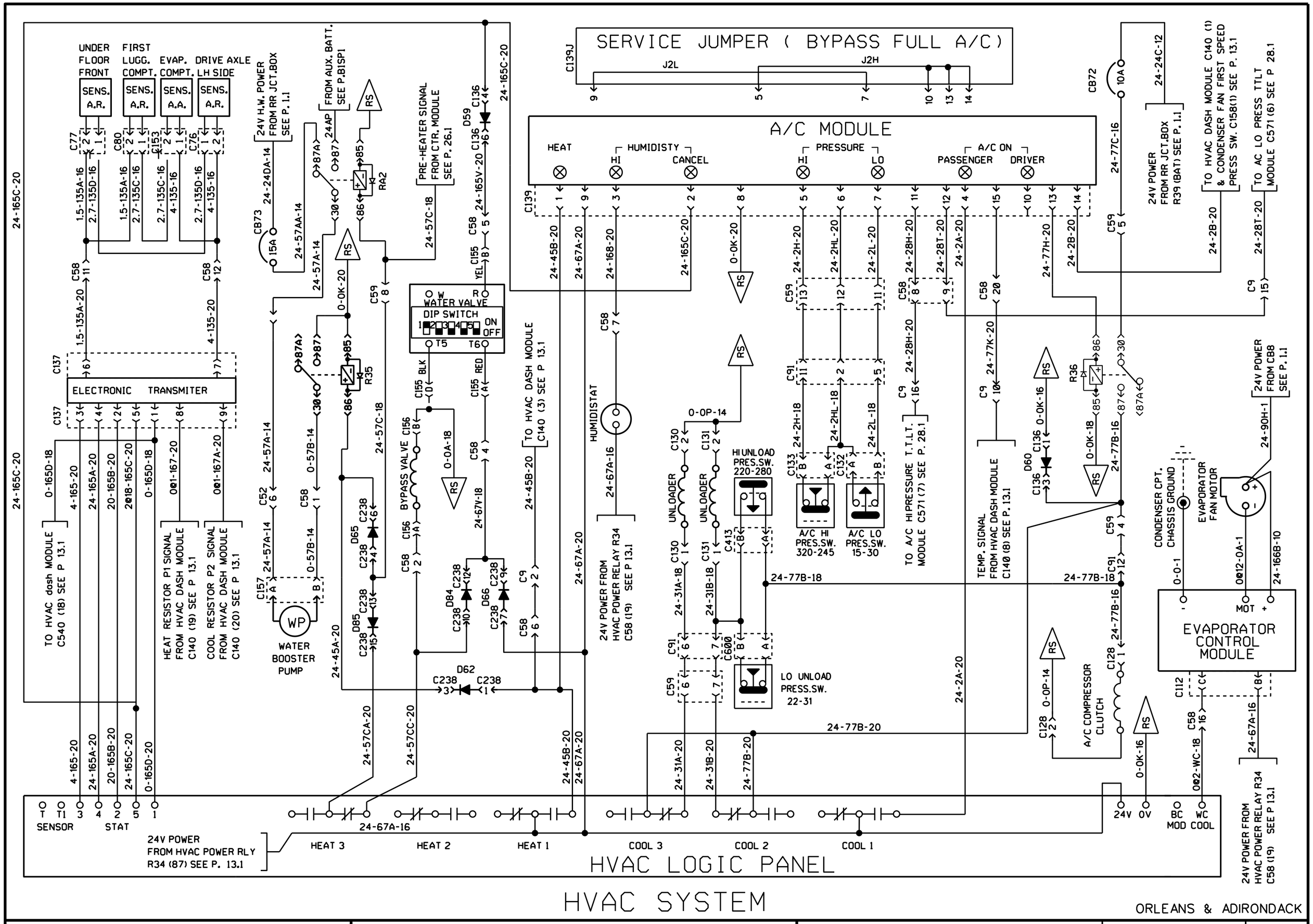

ORLEANS & ADIRONDACK

PREVOST	WIRING DIAGRAM	NO: D060902	PAGE: 13.2sp1	REVISION 00

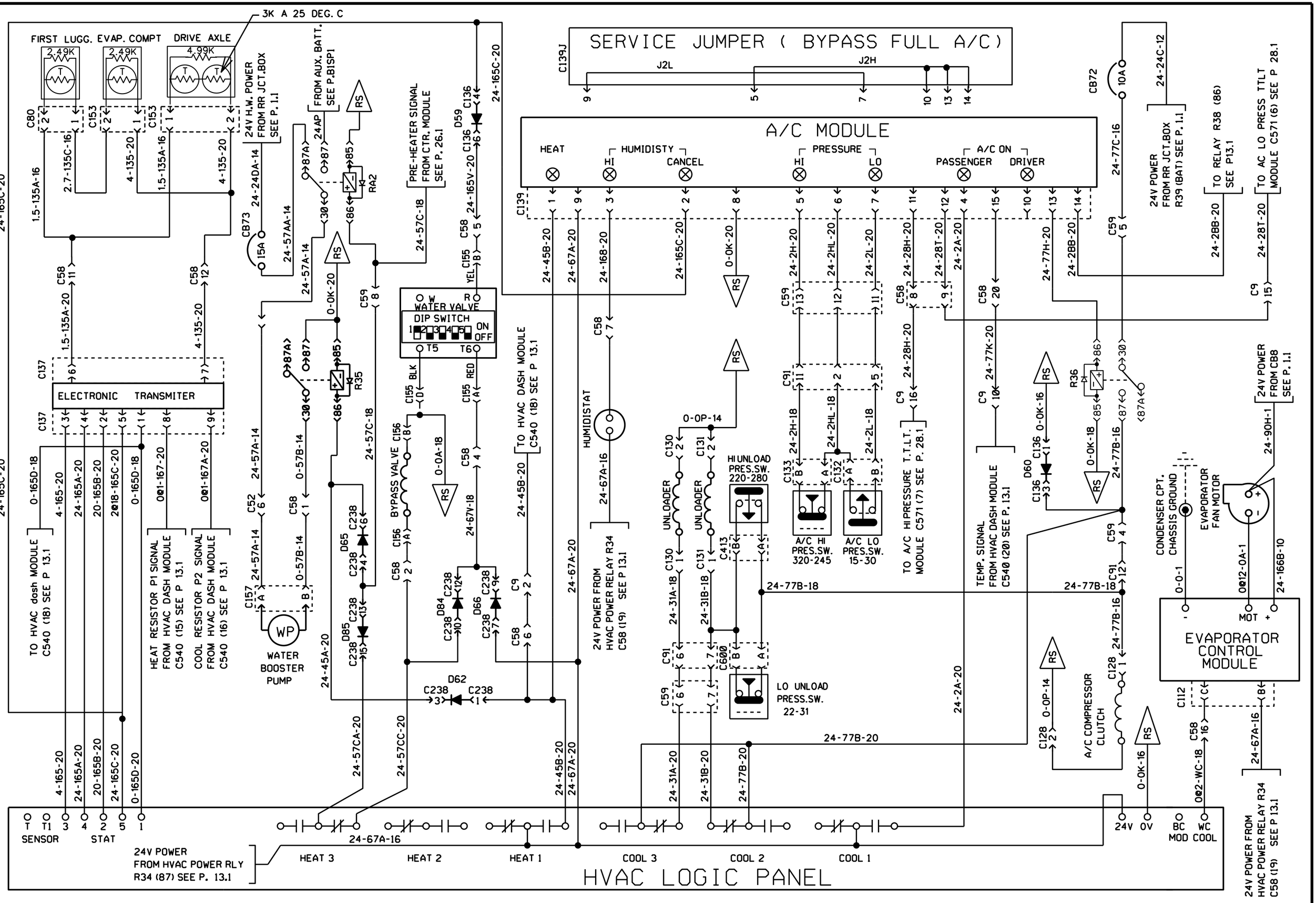

HVAC SYSTEM

ORLEANS & ADIRONDACK

PREVOST	WIRING DIAGRAM	NO: D060902	PAGE: 13.2sp1	REVISION 06

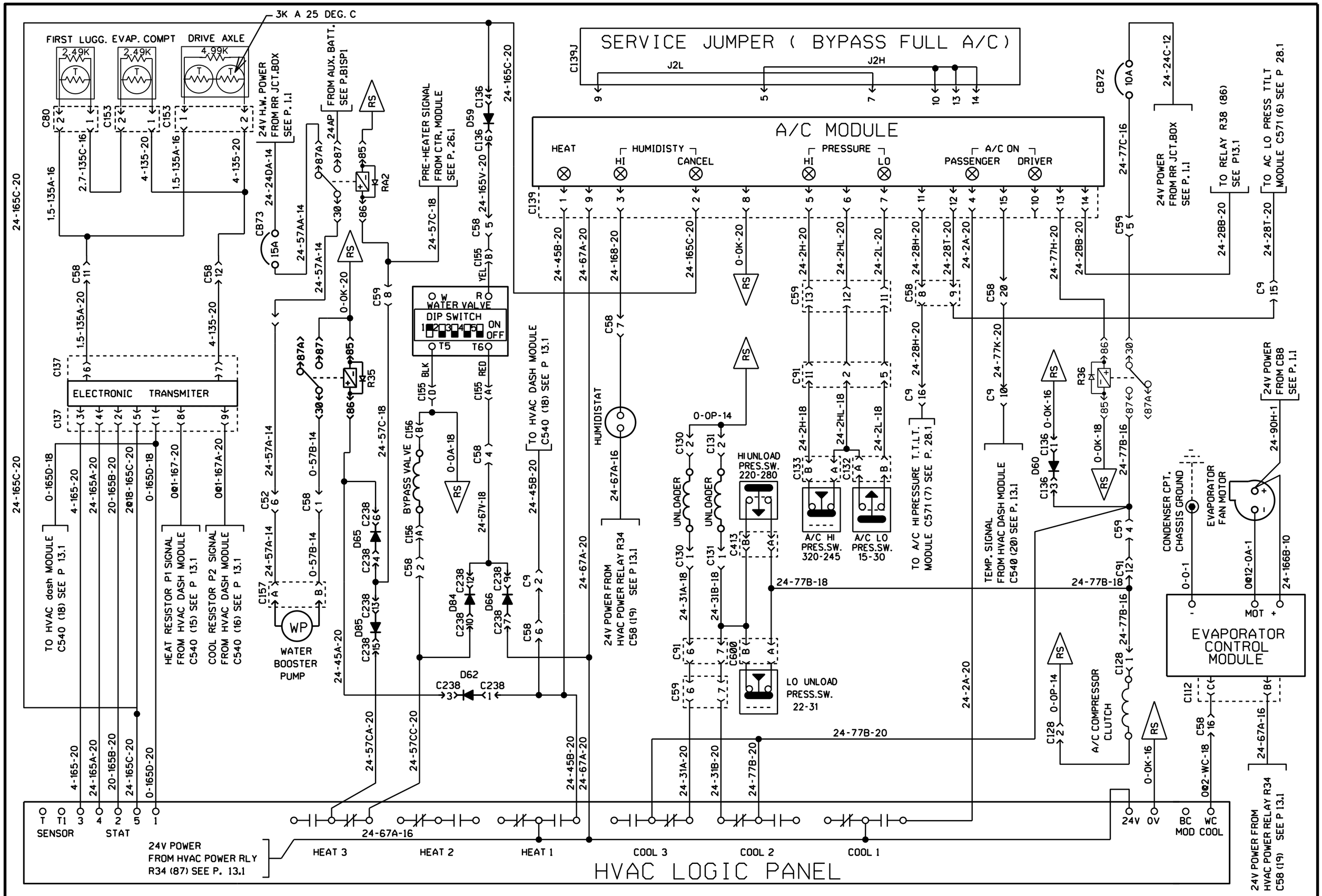

HVAC SYSTEM

ORLEANS & ADIRONDACK

PREVOST	WIRING DIAGRAM	NO: D060902	PAGE: 13.2sp1	REVISION 12

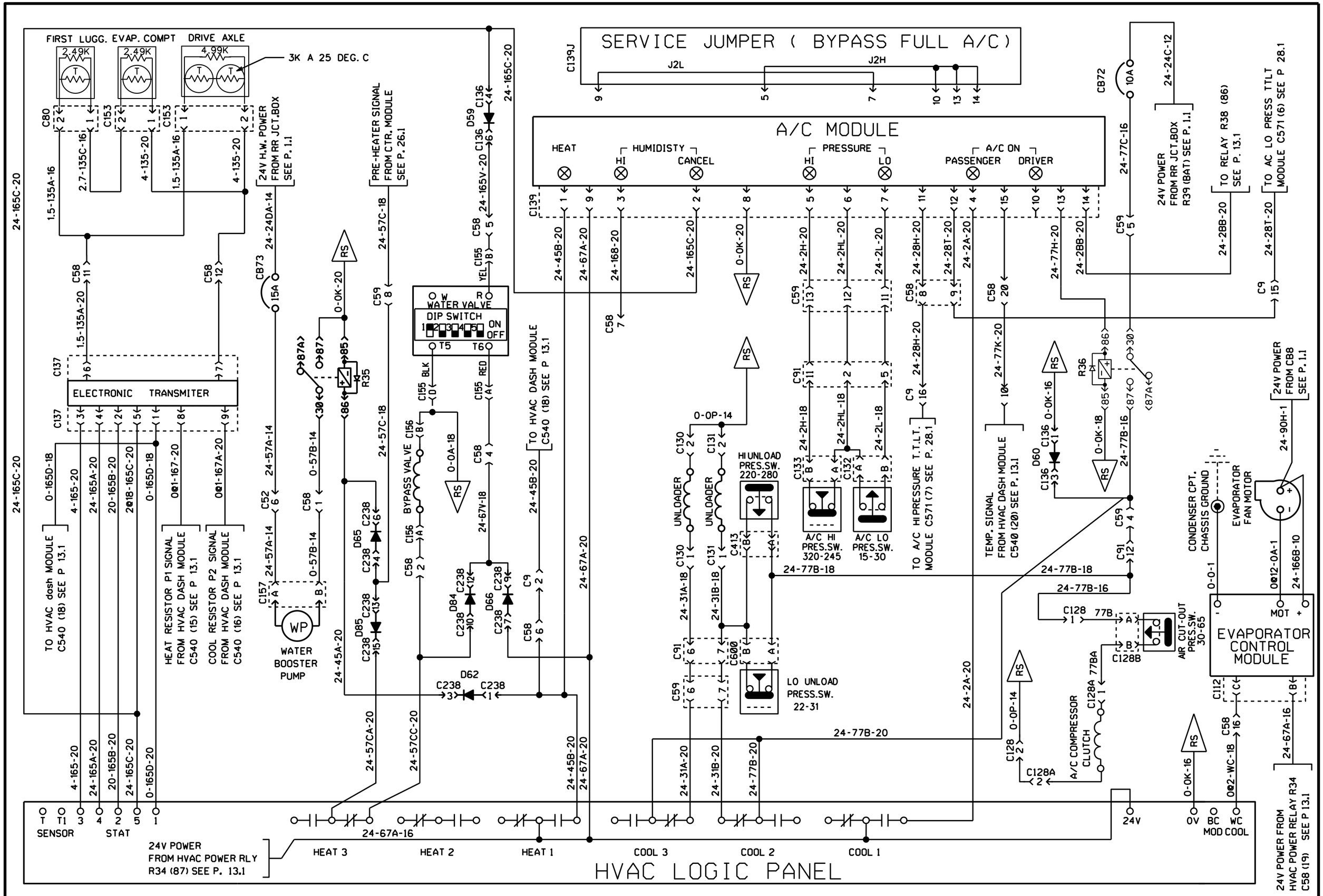

PREVOST	WIRING DIAGRAM	NO: D060902	PAGE: 13.2 sp2	REVISION 00

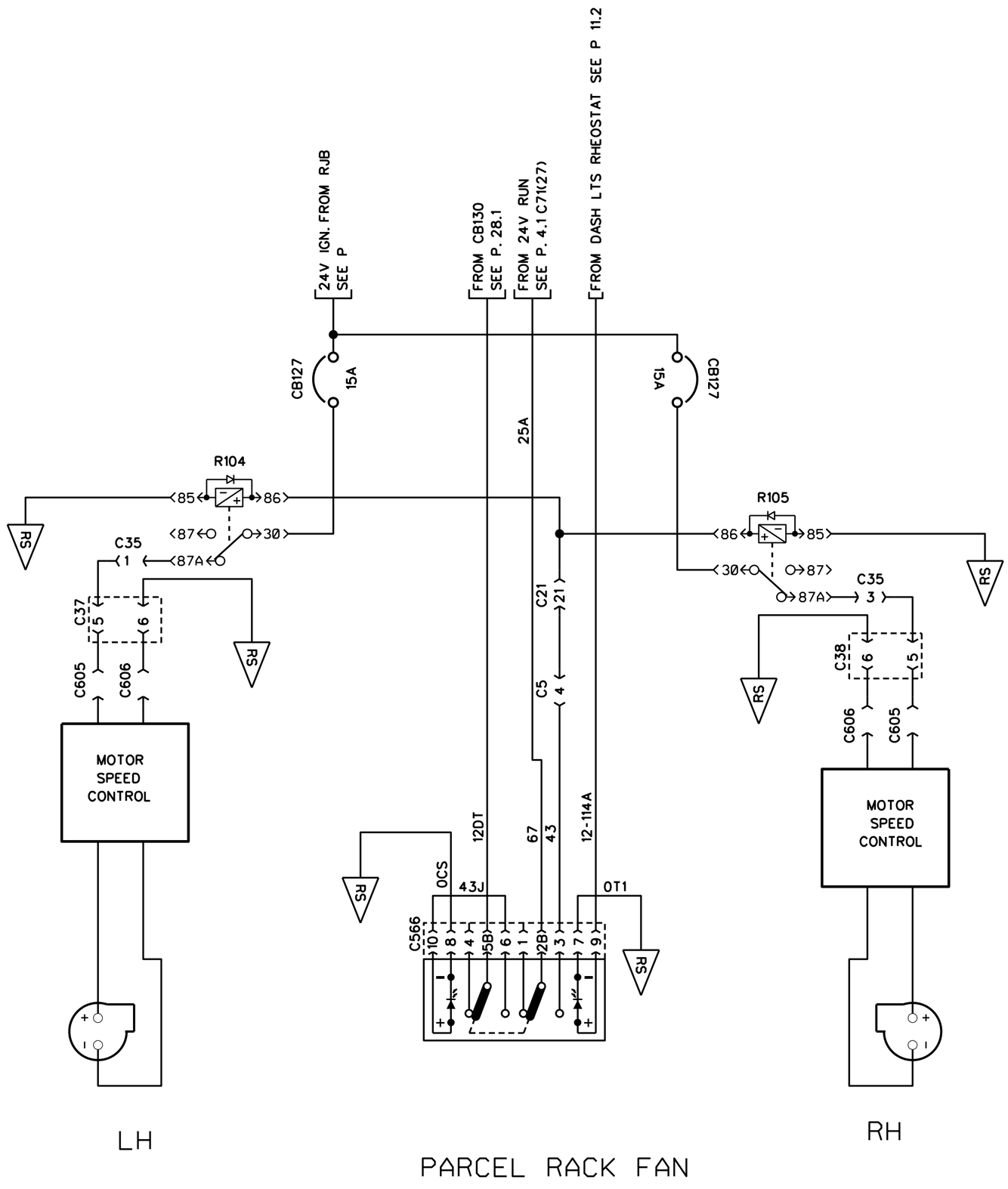

PREVOST	WIRING DIAGRAM	NO: D060902	PAGE: 13.3	REVISION 00

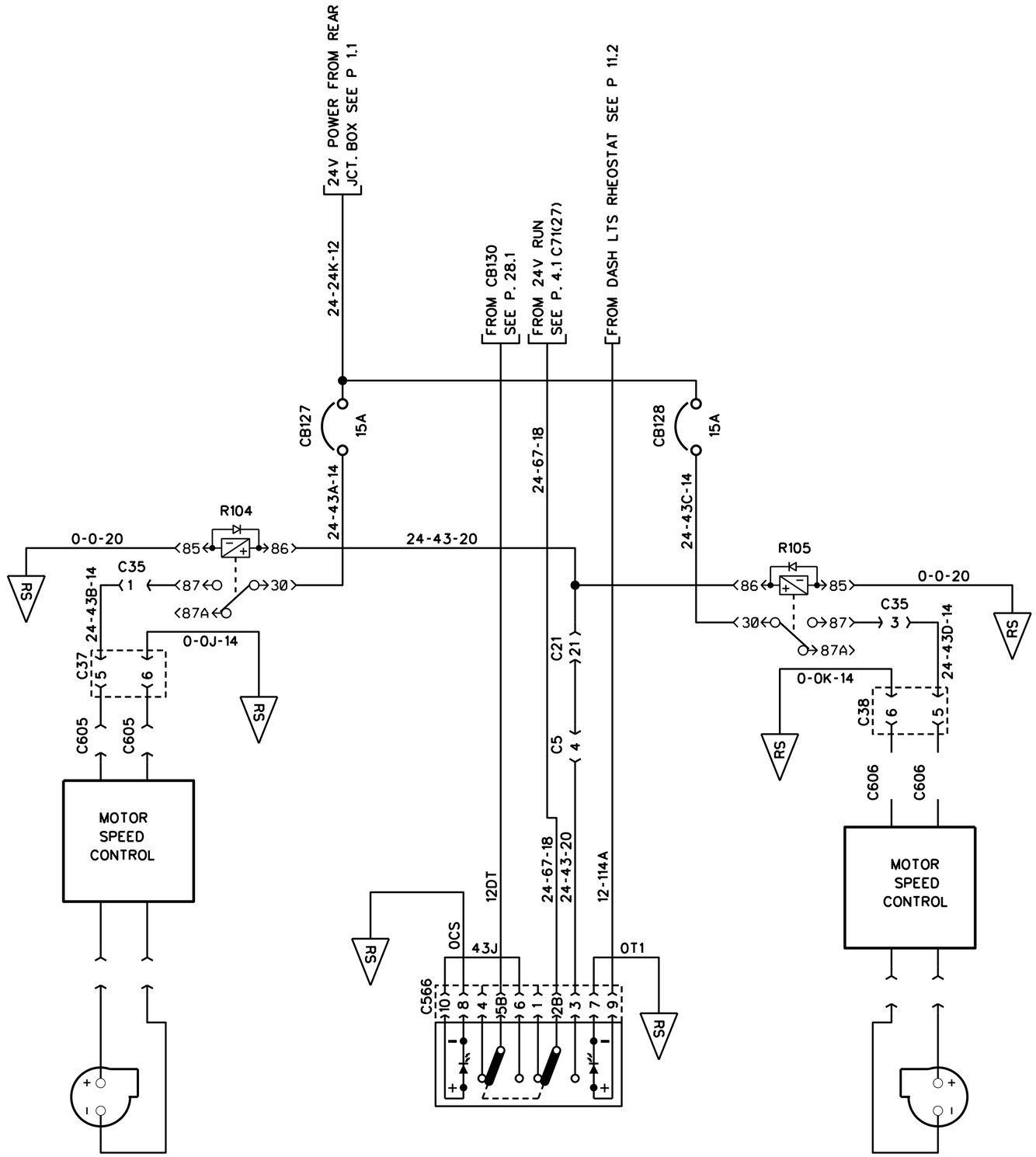

PREVOST	WIRING DIAGRAM	NO: D060902	PAGE: 13.3	REVISION 01

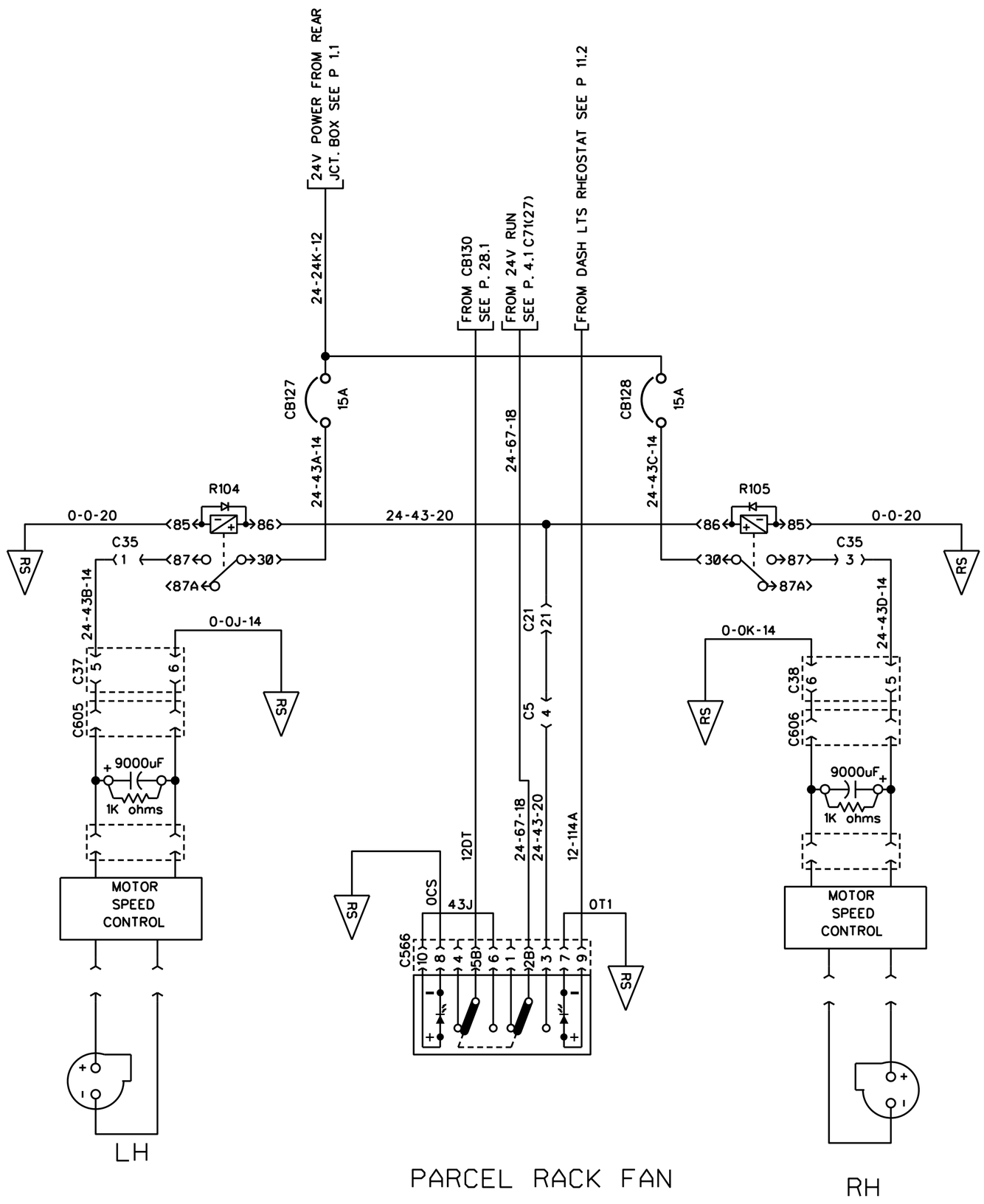

PREVOST	WIRING DIAGRAM	NO: D060902	PAGE: 13.3	REVISION 05

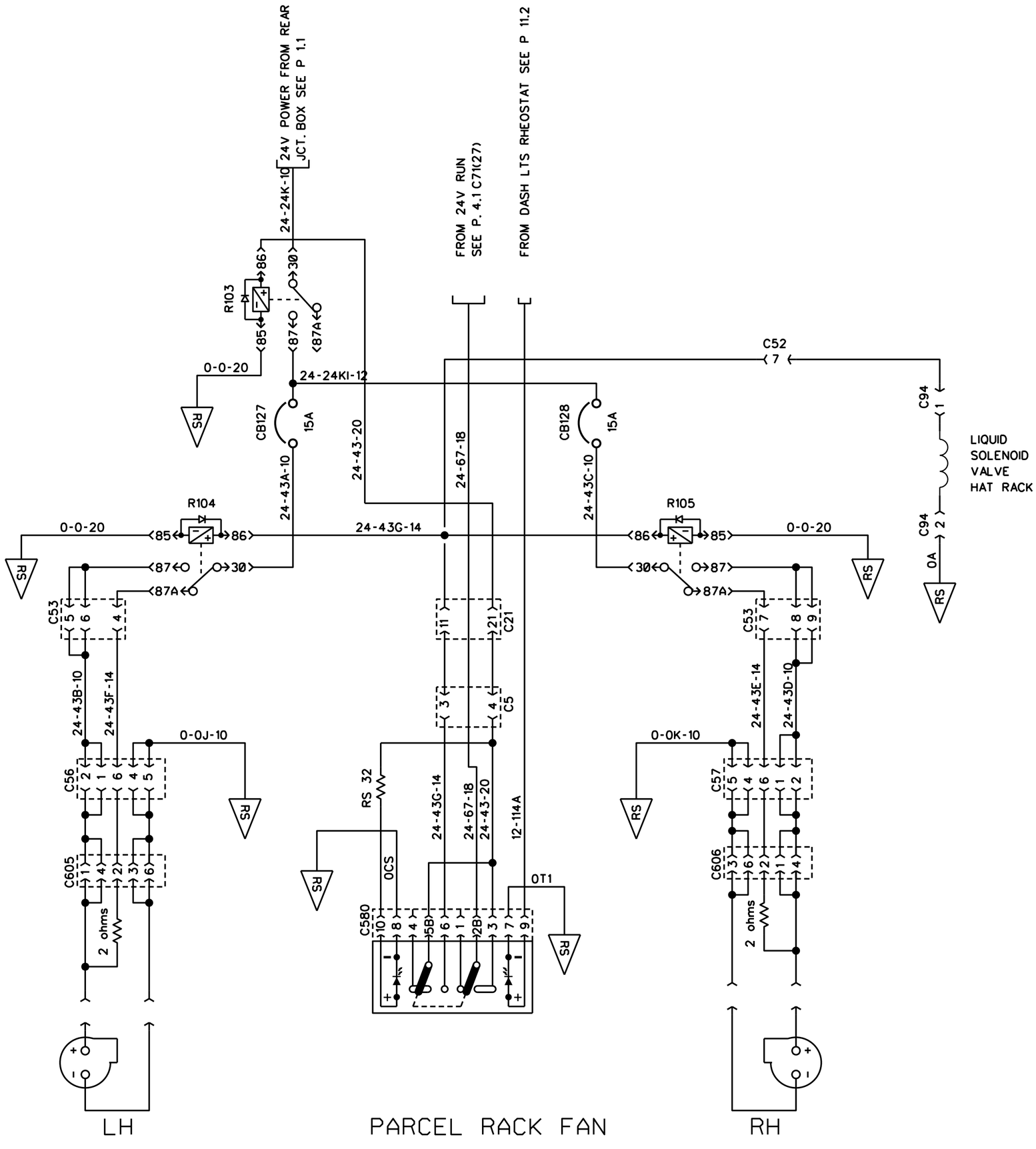

PREVOST	WIRING DIAGRAM	NO: D060902	PAGE: 13.3	REVISION 10

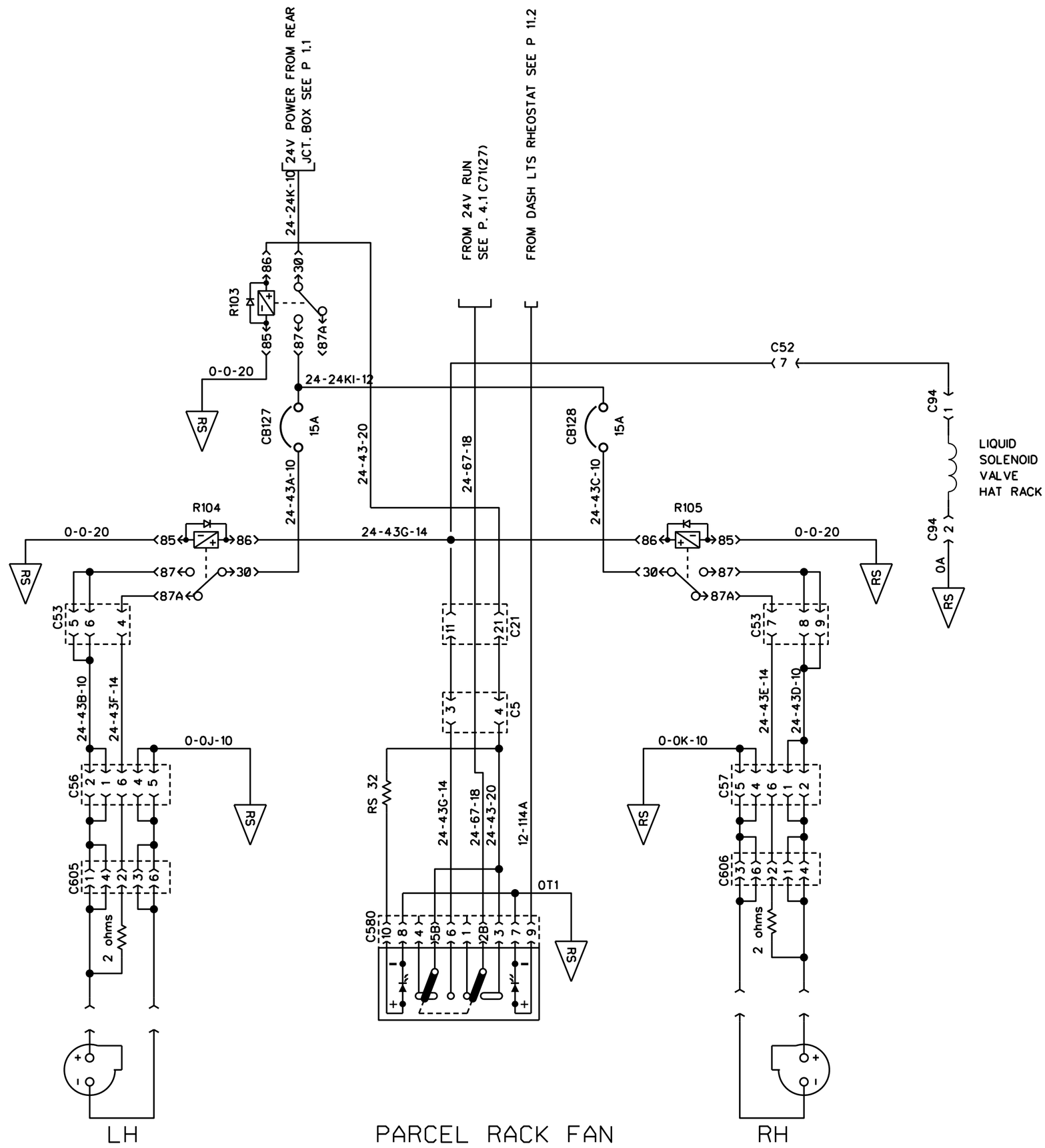

PREVOST	WIRING DIAGRAM	NO: D060902	PAGE: 13.3	REVISION 12

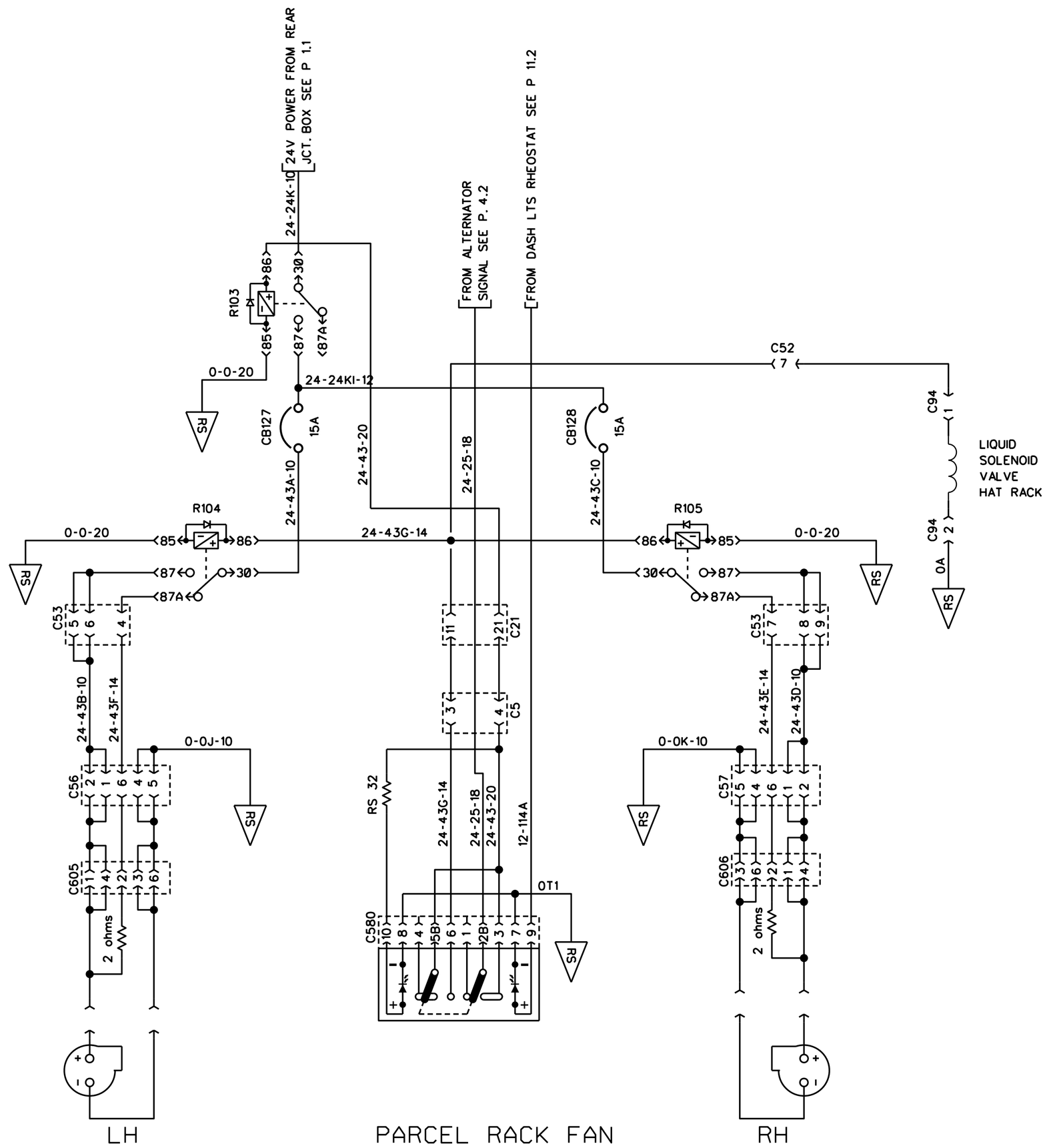

PREVOST	WIRING DIAGRAM	NO: D060902	PAGE: 13.3	REVISION 16

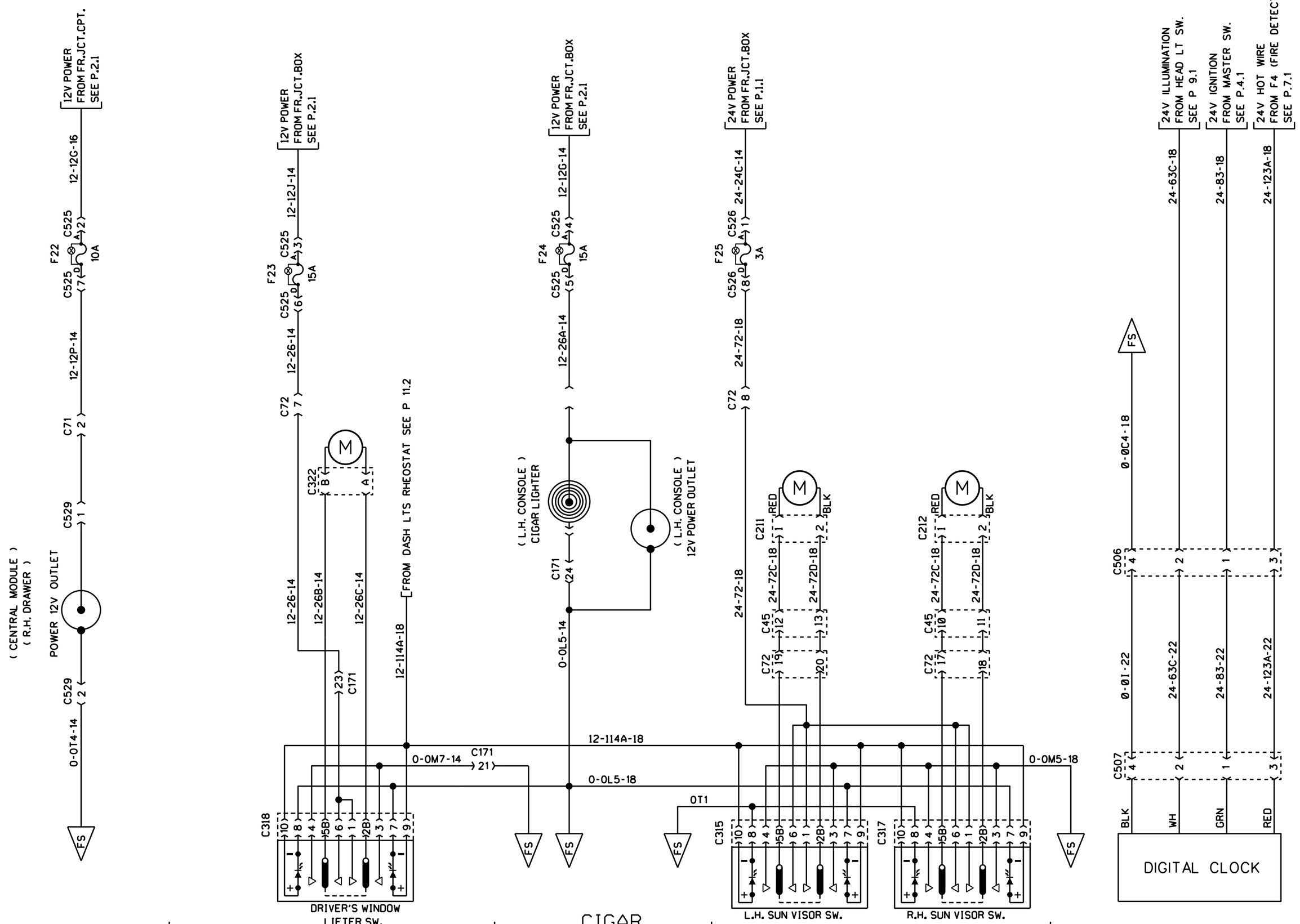

POWER 12V OUTLET | DRIVER'S WINDOW LIFTER | CIGAR LIGHTER | SUN VISOR | DIGITAL CLOCK

PREVOST	WIRING DIAGRAM	NO: D060902	PAGE: 14.1	REVISION 00

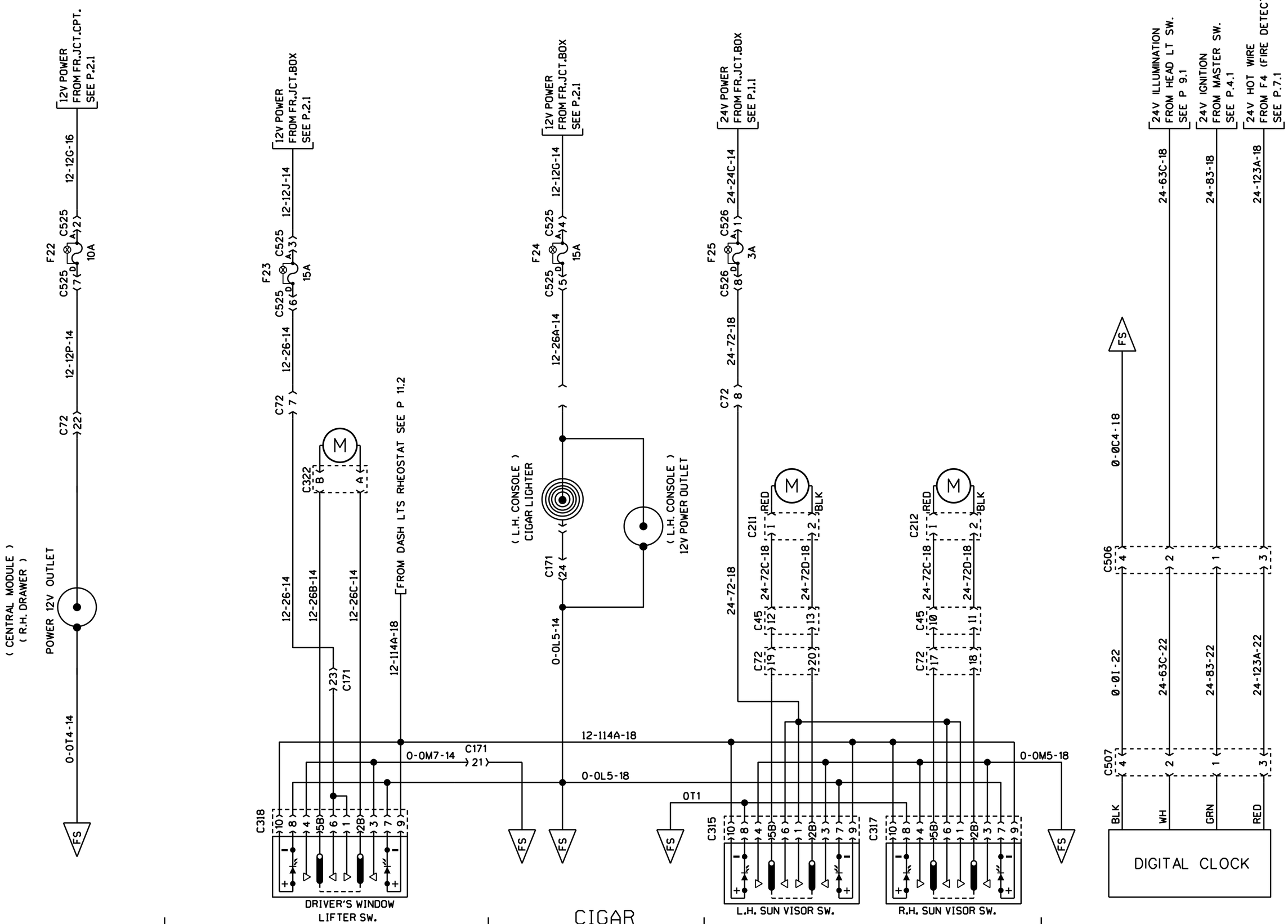

PREVOST	WIRING DIAGRAM	NO: D060902	PAGE: 14.1	REVISION 01

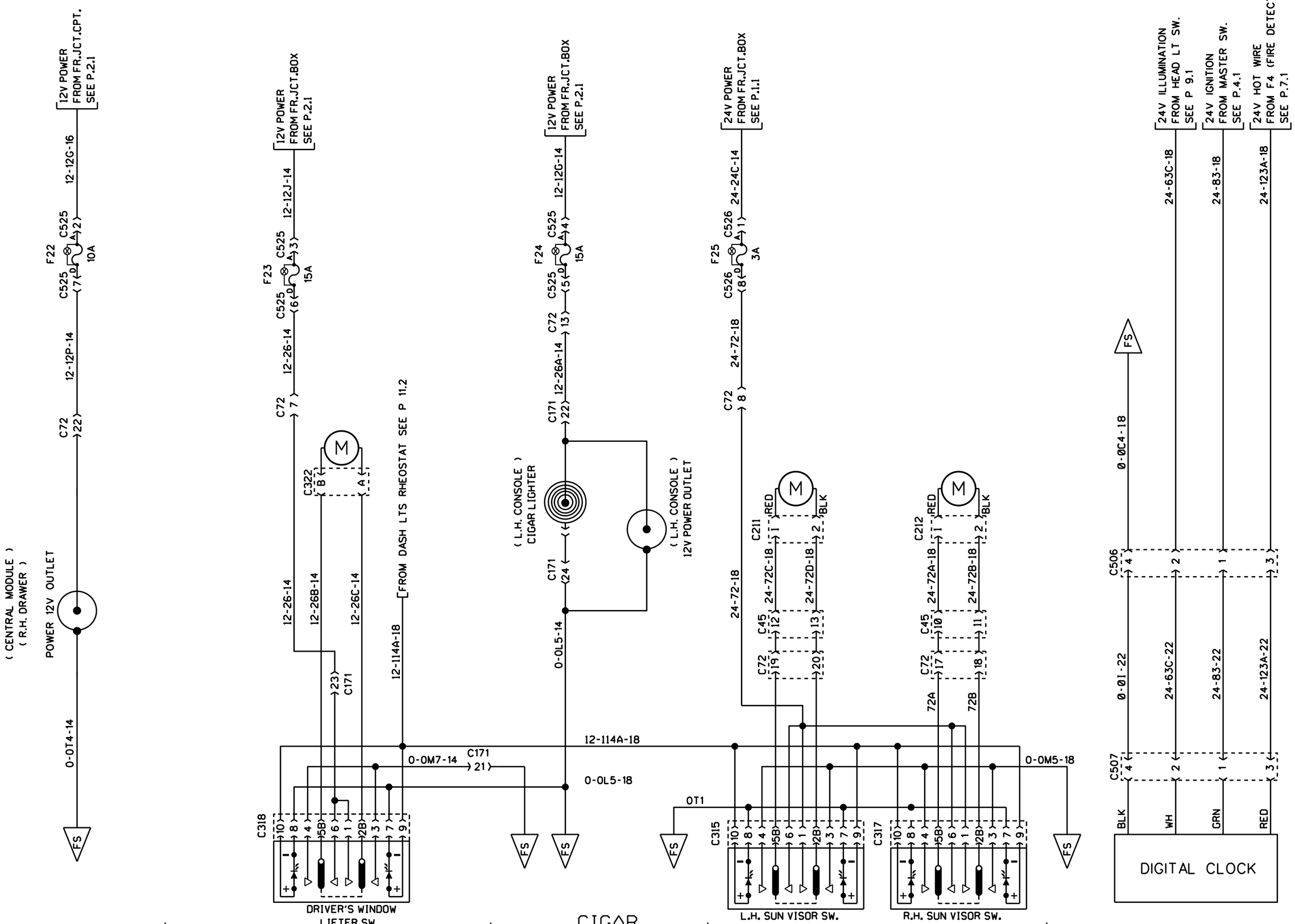

PREVOST	WIRING DIAGRAM	NO: D060902	PAGE: 14.1	REVISION 08

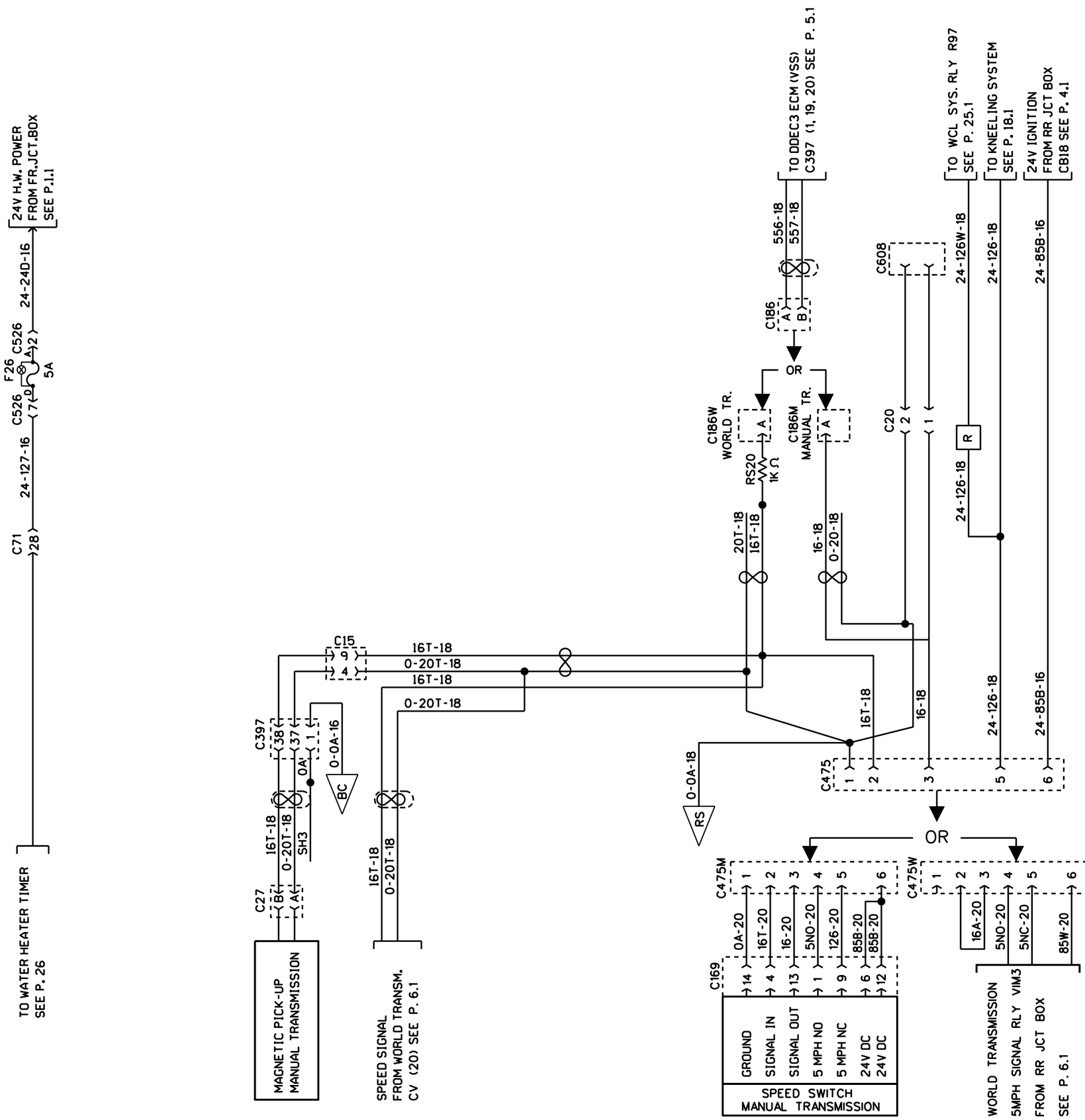

PREVOST	WIRING DIAGRAM	NO: D060902	PAGE: 15.1	REVISION 00

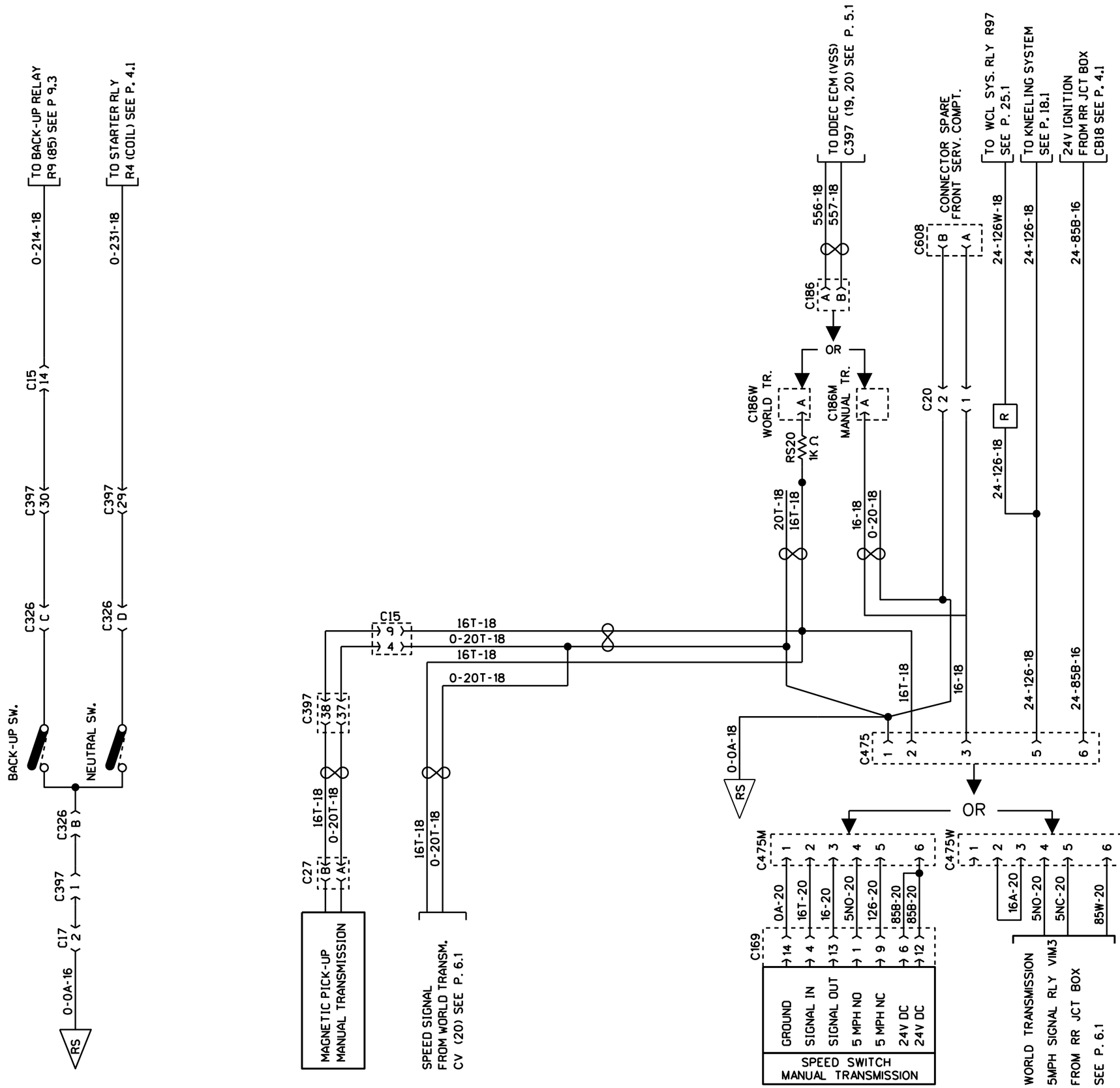

MANUAL TRANSMISSION

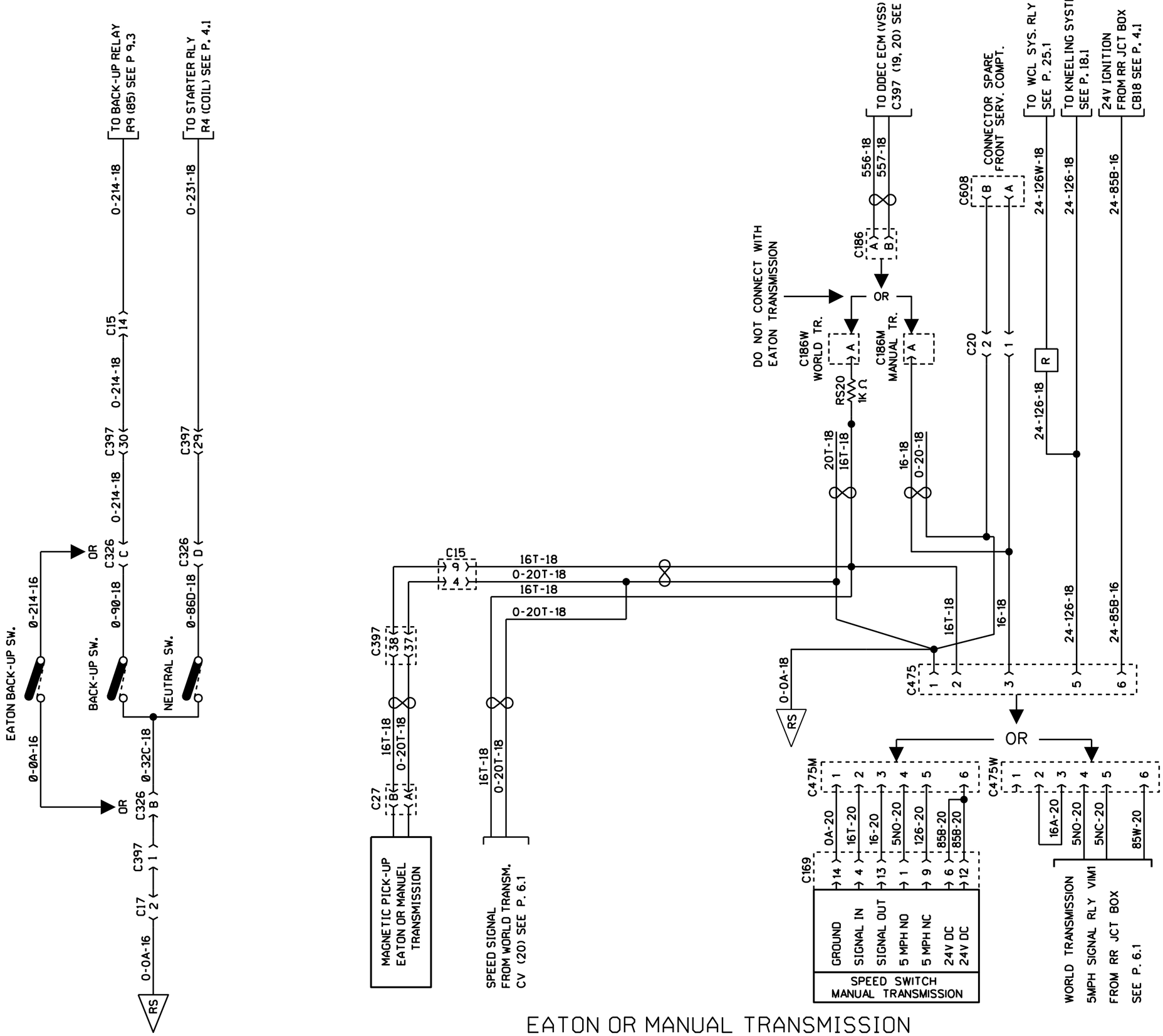

EATON OR MANUAL TRANSMISSION

PREVOST	WIRING DIAGRAM	NO: D060902	PAGE: 15.1	REVISION 08

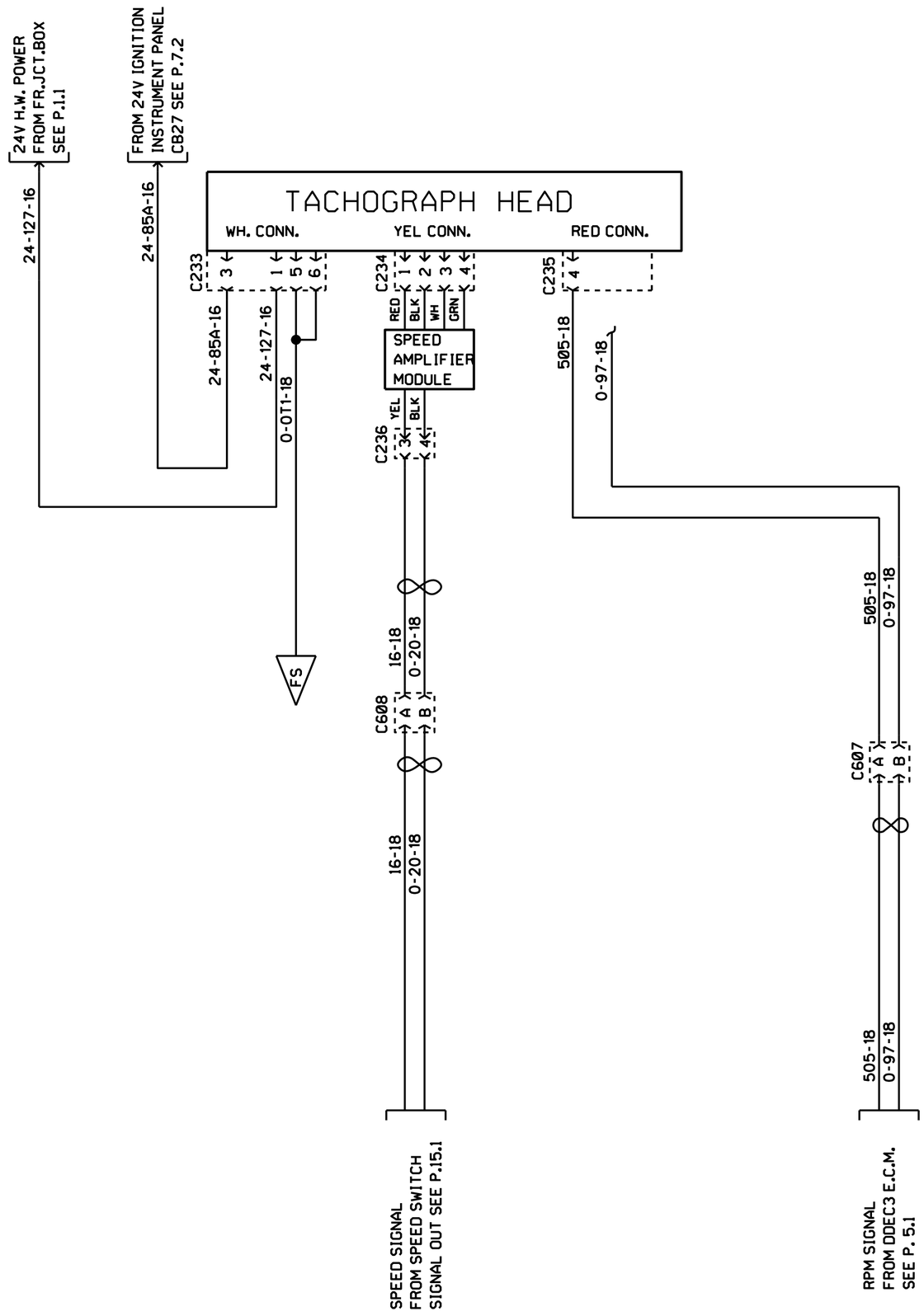

ELECTRONIC TACHOGRAPH

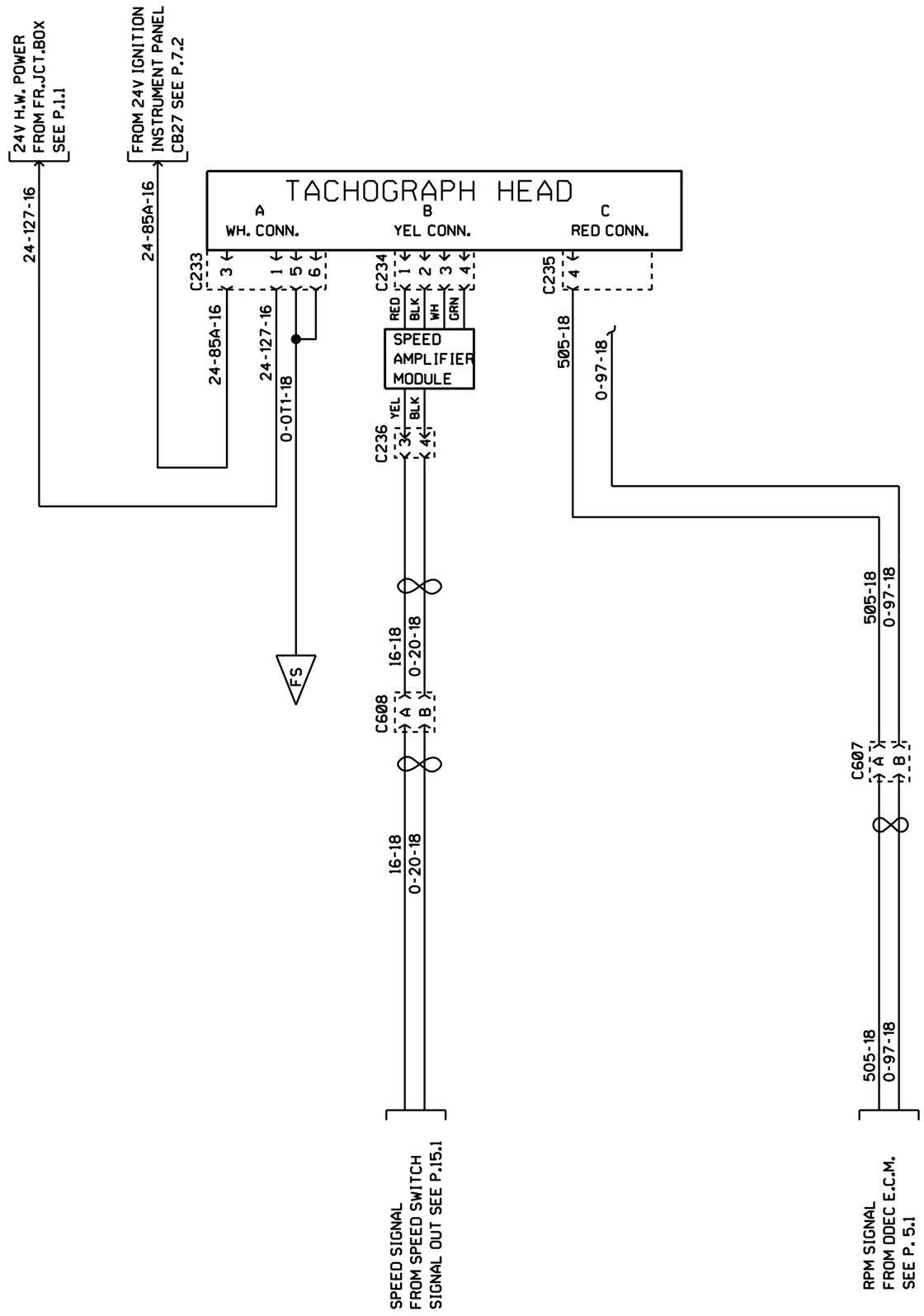

ELECTRONIC TACHOGRAPH

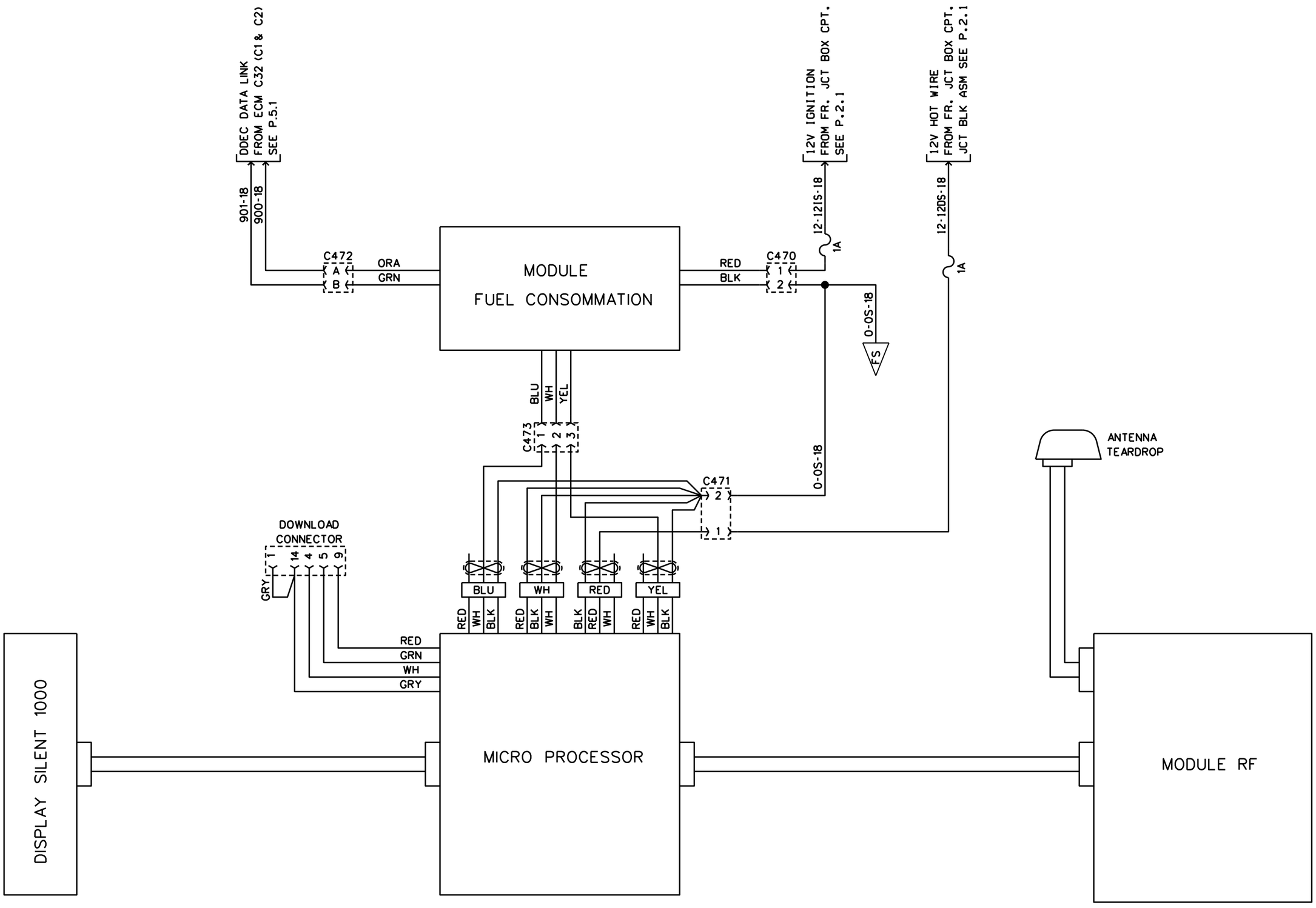

SILENT 1000

PREVOST	WIRING DIAGRAM	NO: D060902	PAGE: 15.1SP2	REVISION 00

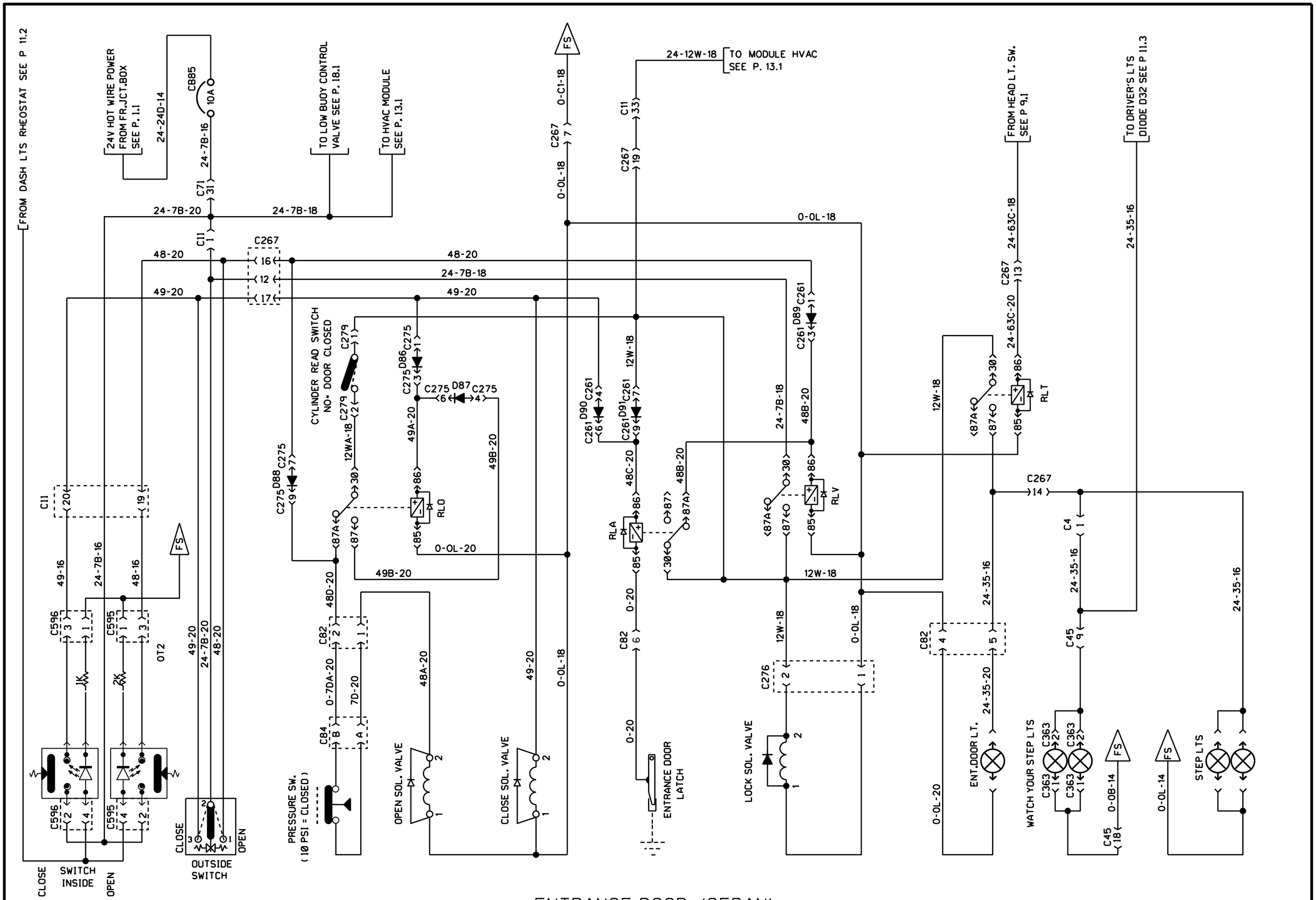

ENTRANCE DOOR (SEDAN)

PREVOST	WIRING DIAGRAM	NO: D060902	PAGE: 16.1	REVISION 00

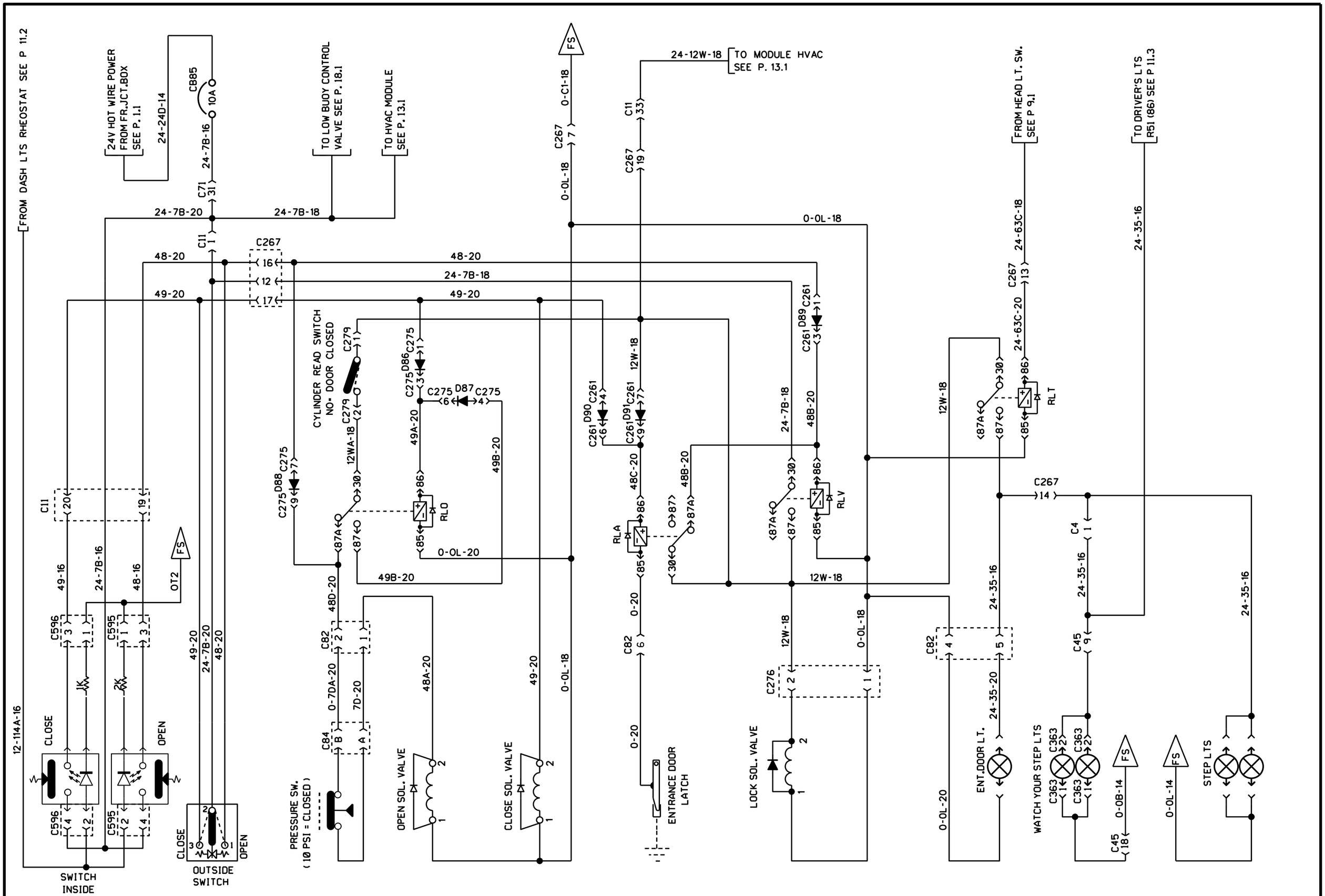

ENTRANCE DOOR (SEDAN)

PREVOST	WIRING DIAGRAM	NO: D060902	PAGE: 16.1	REVISION 01

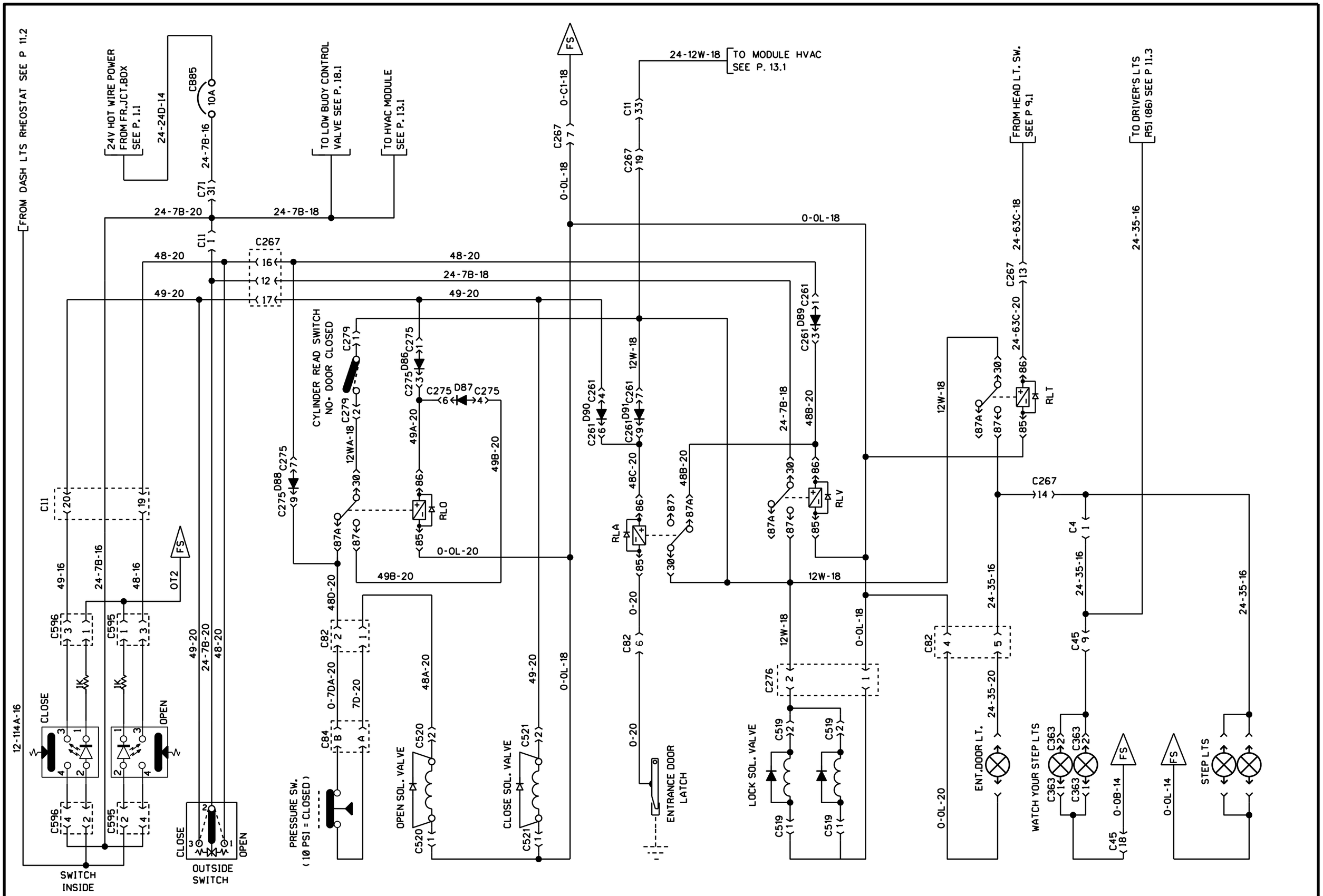

ENTRANCE DOOR (SEDAN)

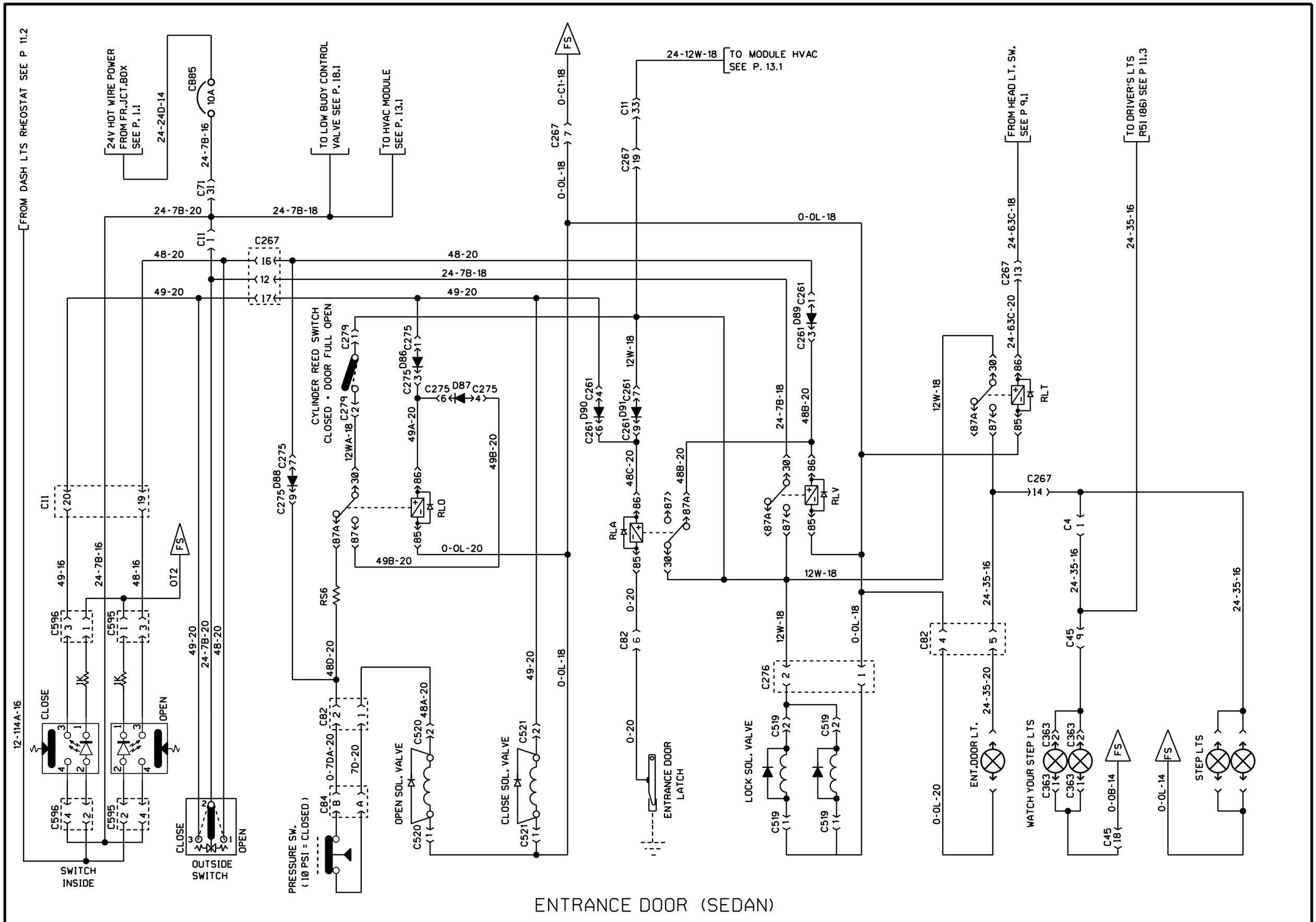

ENTRANCE DOOR (SEDAN)

PREVOST	WIRING DIAGRAM	NO: D060902	PAGE: 16.1	REVISION 23

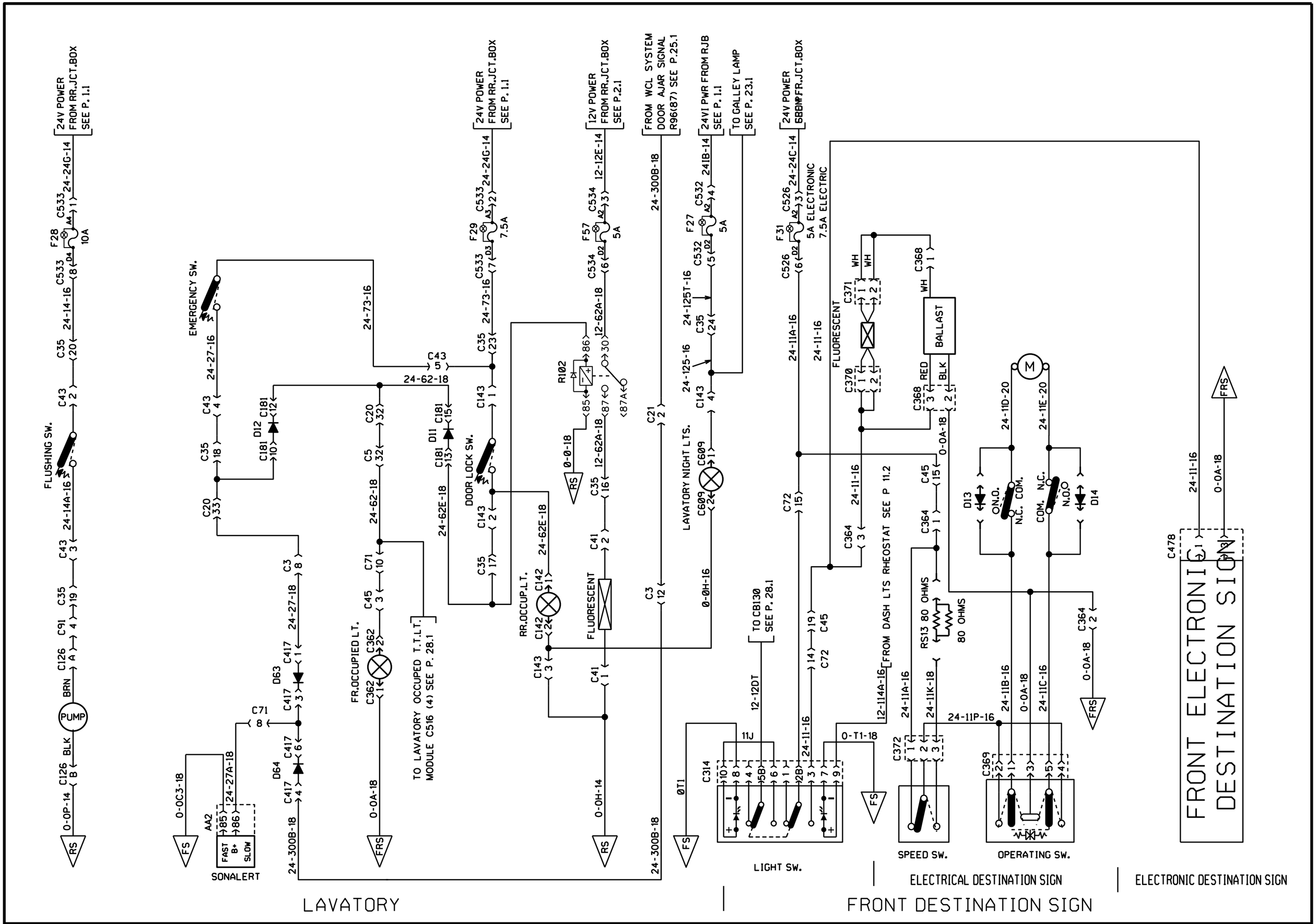

PREVOST	WIRING DIAGRAM	NO: D060902	PAGE: 17.1	REVISION 00

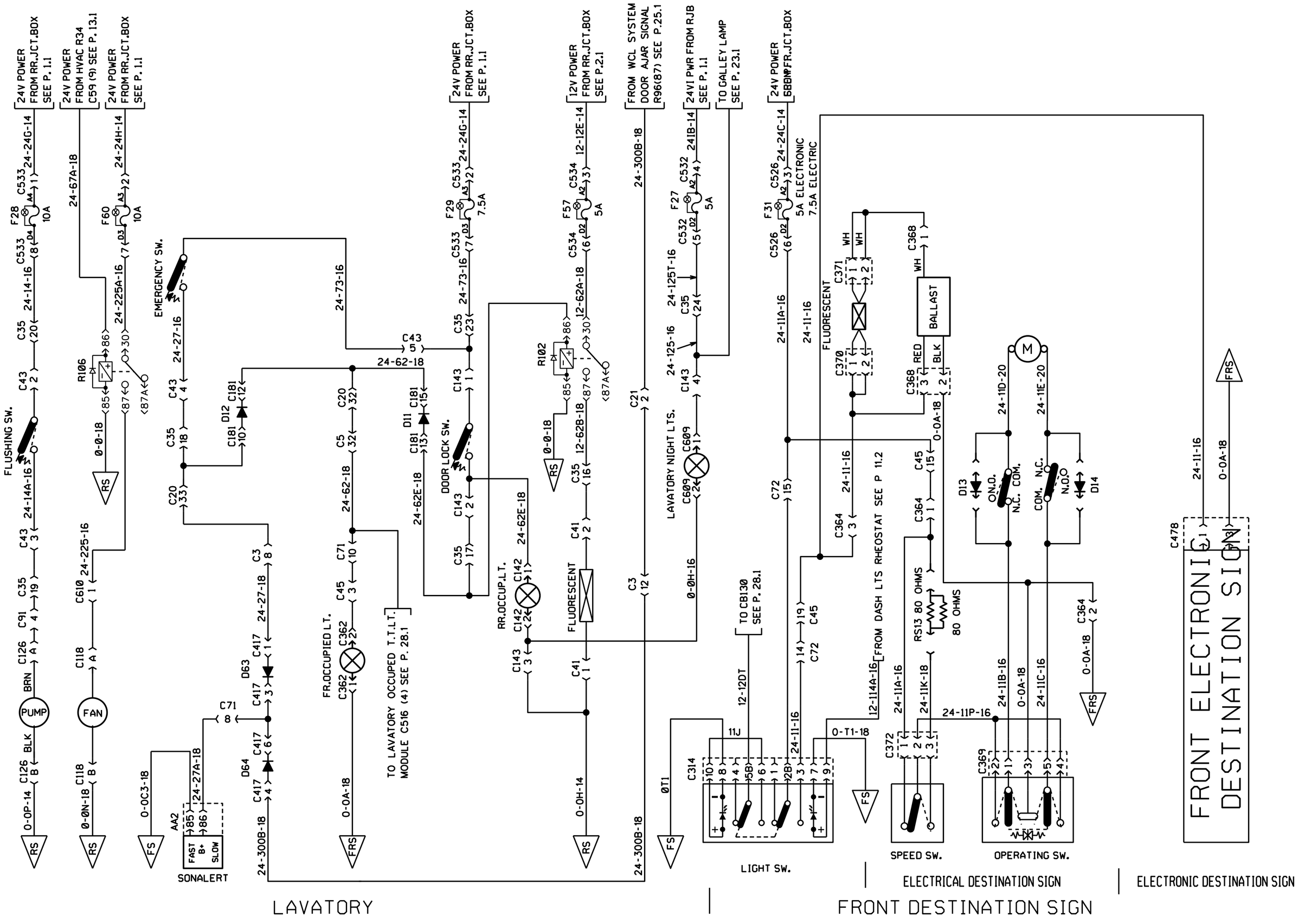

PREVOST	WIRING DIAGRAM	NO: D060902	PAGE: 17.1	REVISION 01

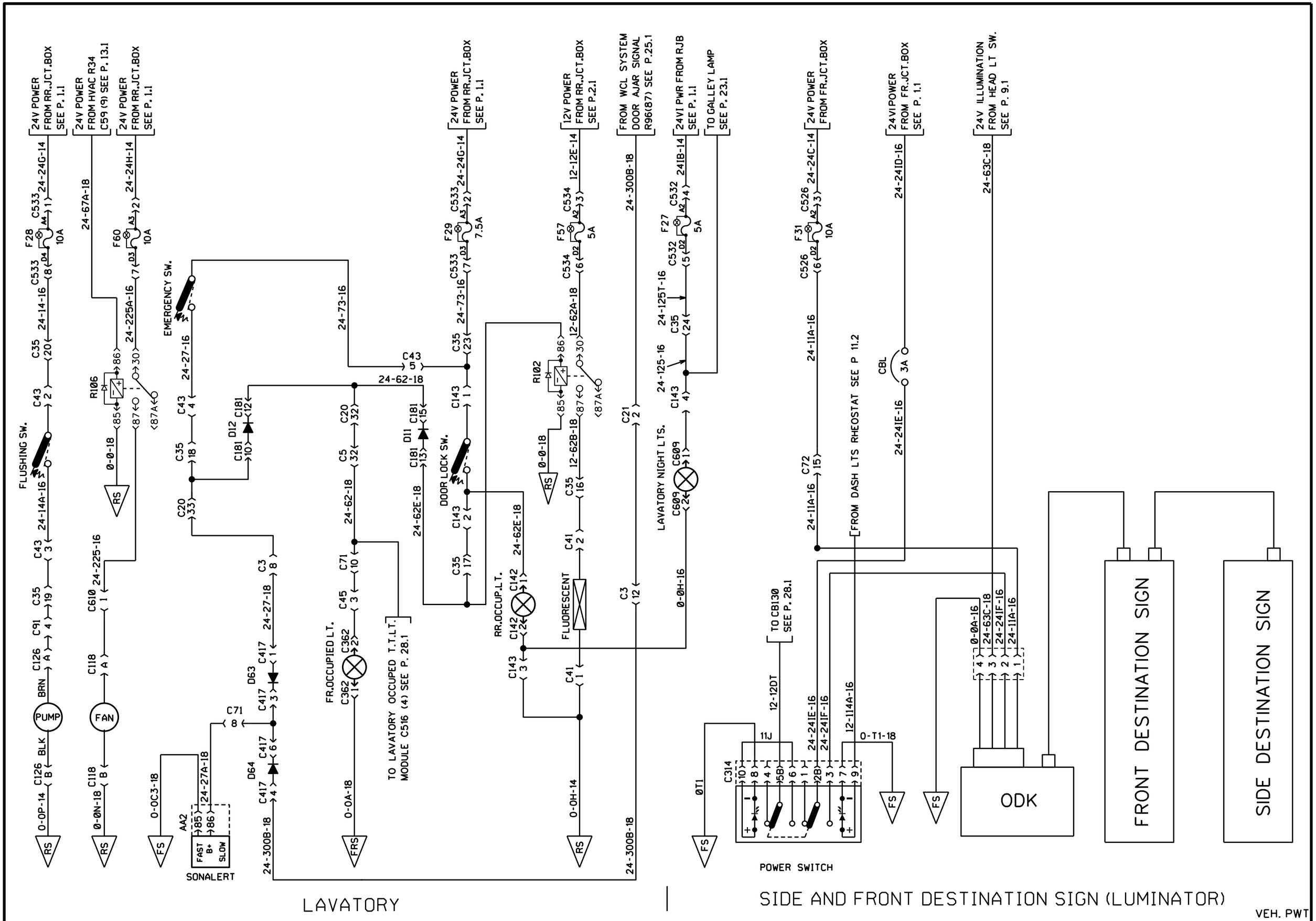

VEH. PWT

PREVOST	WIRING DIAGRAM	NO: D060902	PAGE: 17.1 SP1	REVISION 00

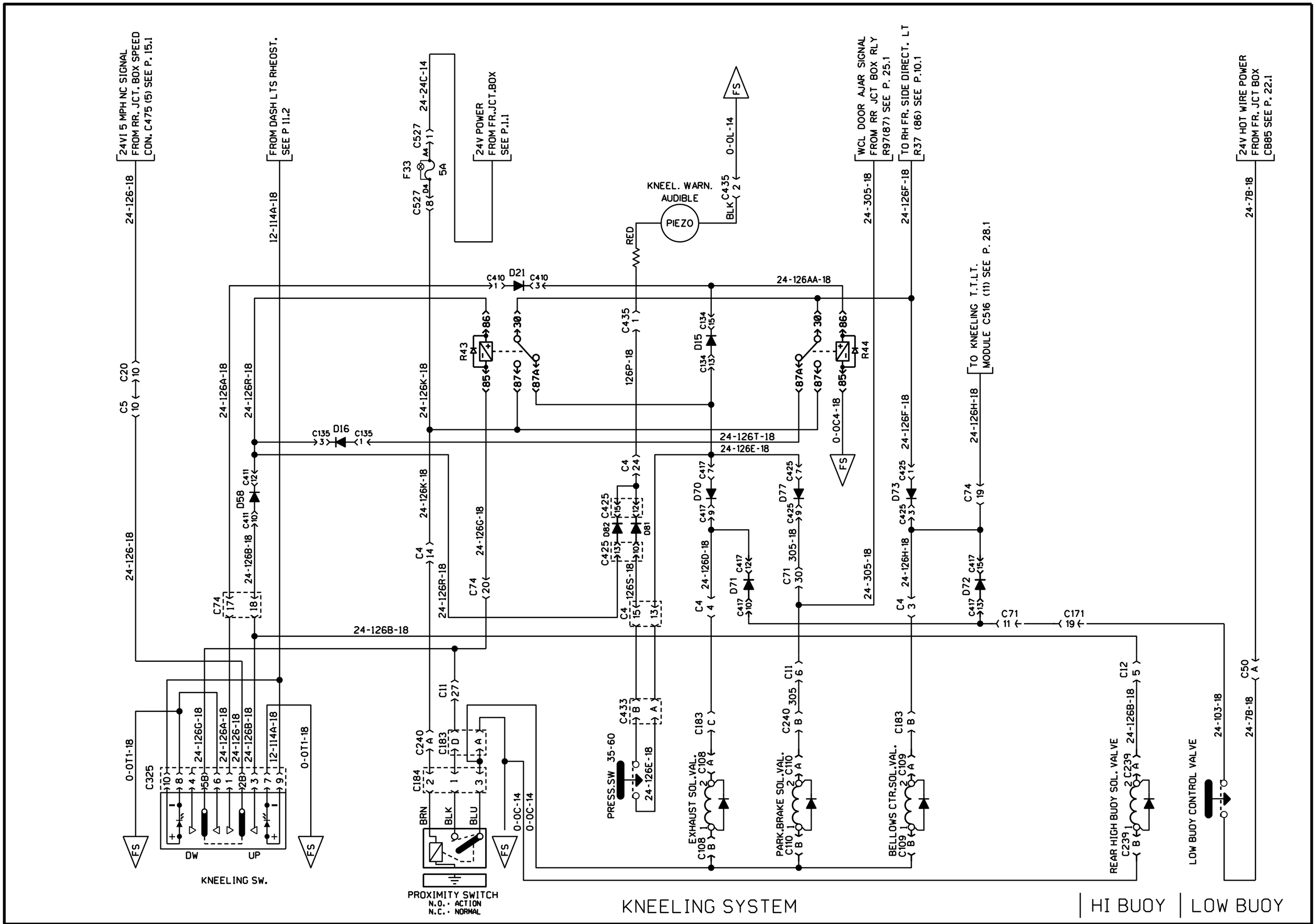

PREVOST	WIRING DIAGRAM	NO: D060902	PAGE: 18.1	REVISION 00

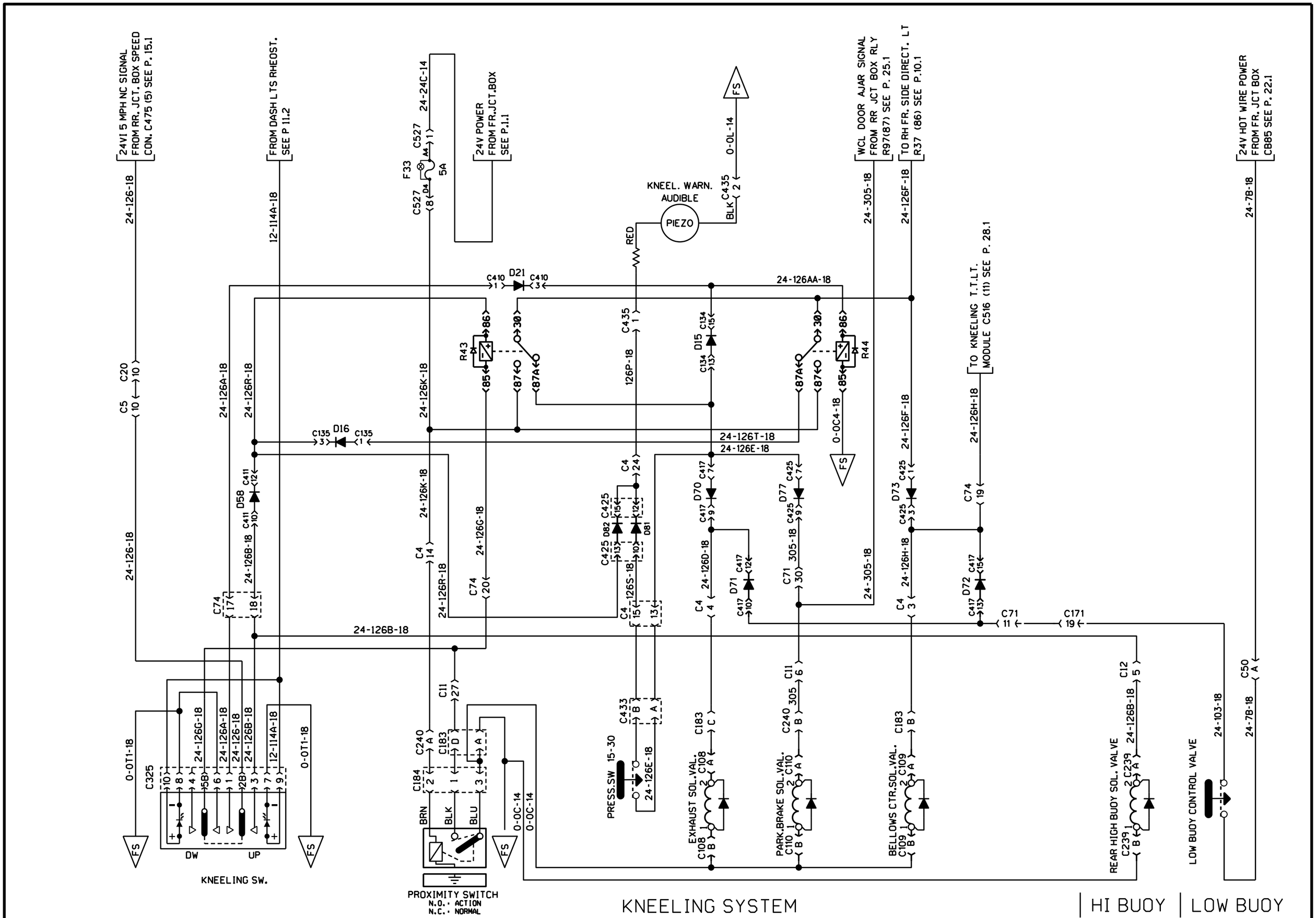

PREVOST	WIRING DIAGRAM	NO: D060902	PAGE: 18.1	REVISION 08

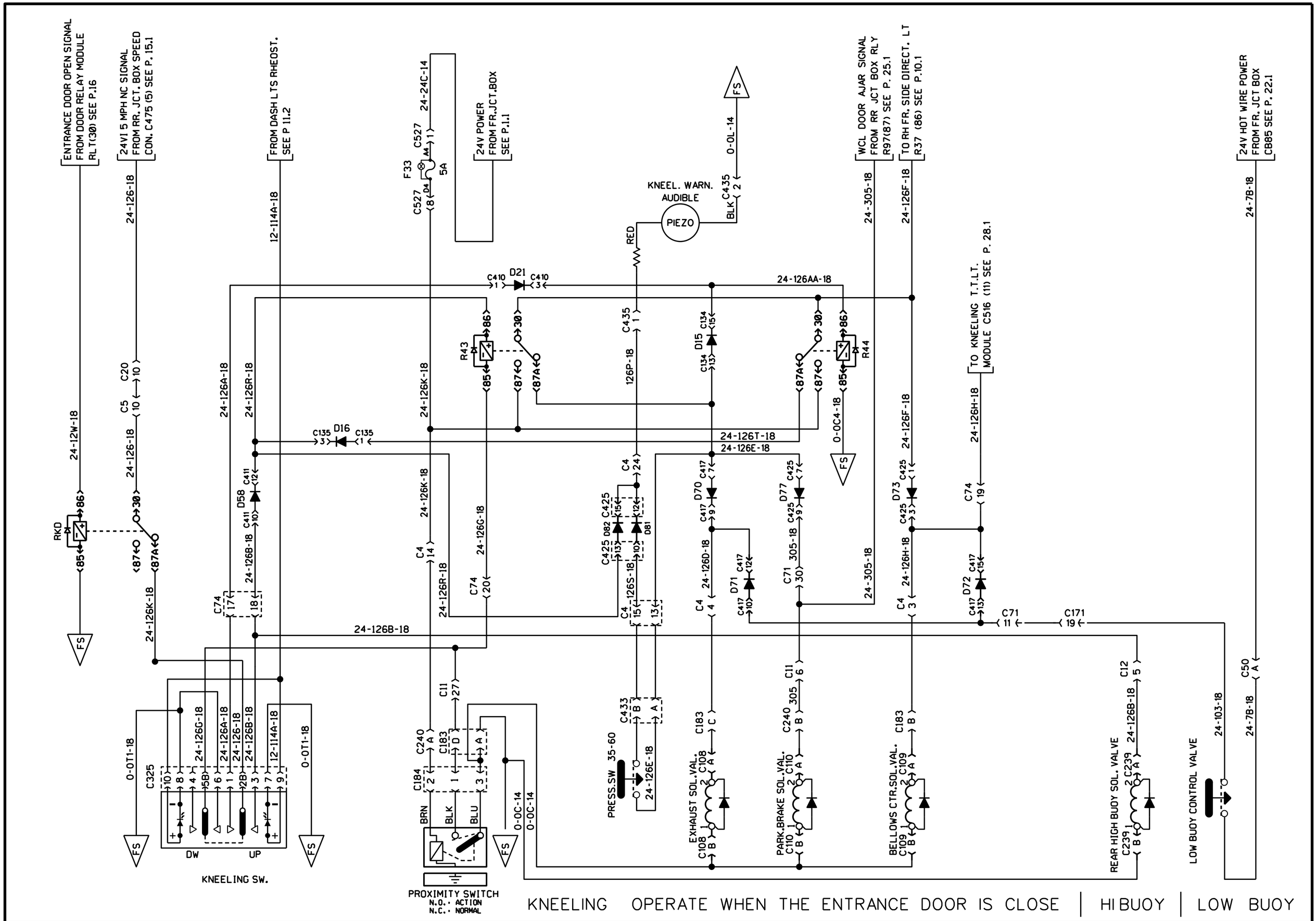

PREVOST	WIRING DIAGRAM	NO: D060902	PAGE: 18.1 sp1	REVISION 00

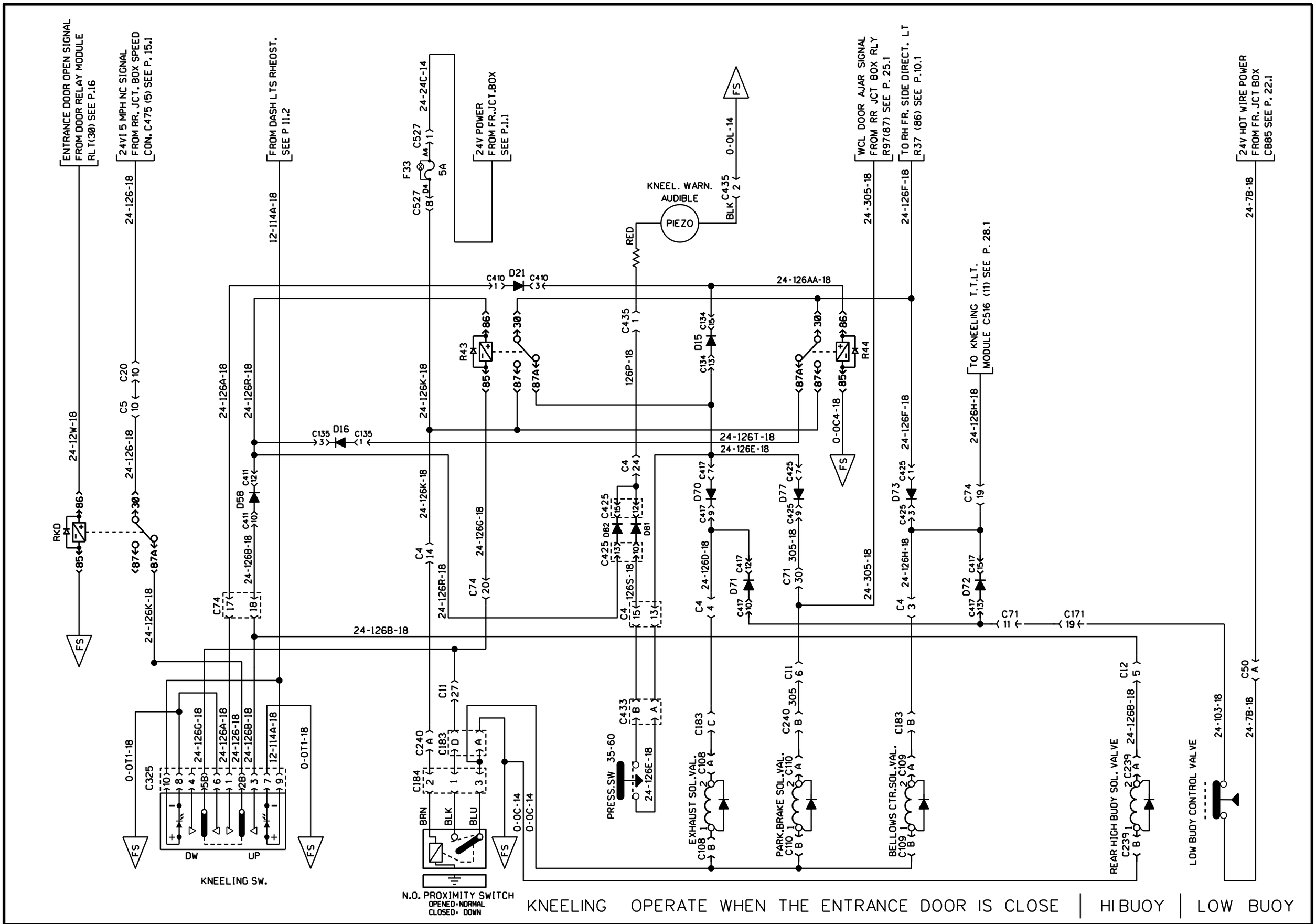

PREVOST	WIRING DIAGRAM	NO: D060902	PAGE: 18.1 sp1	REVISION 01

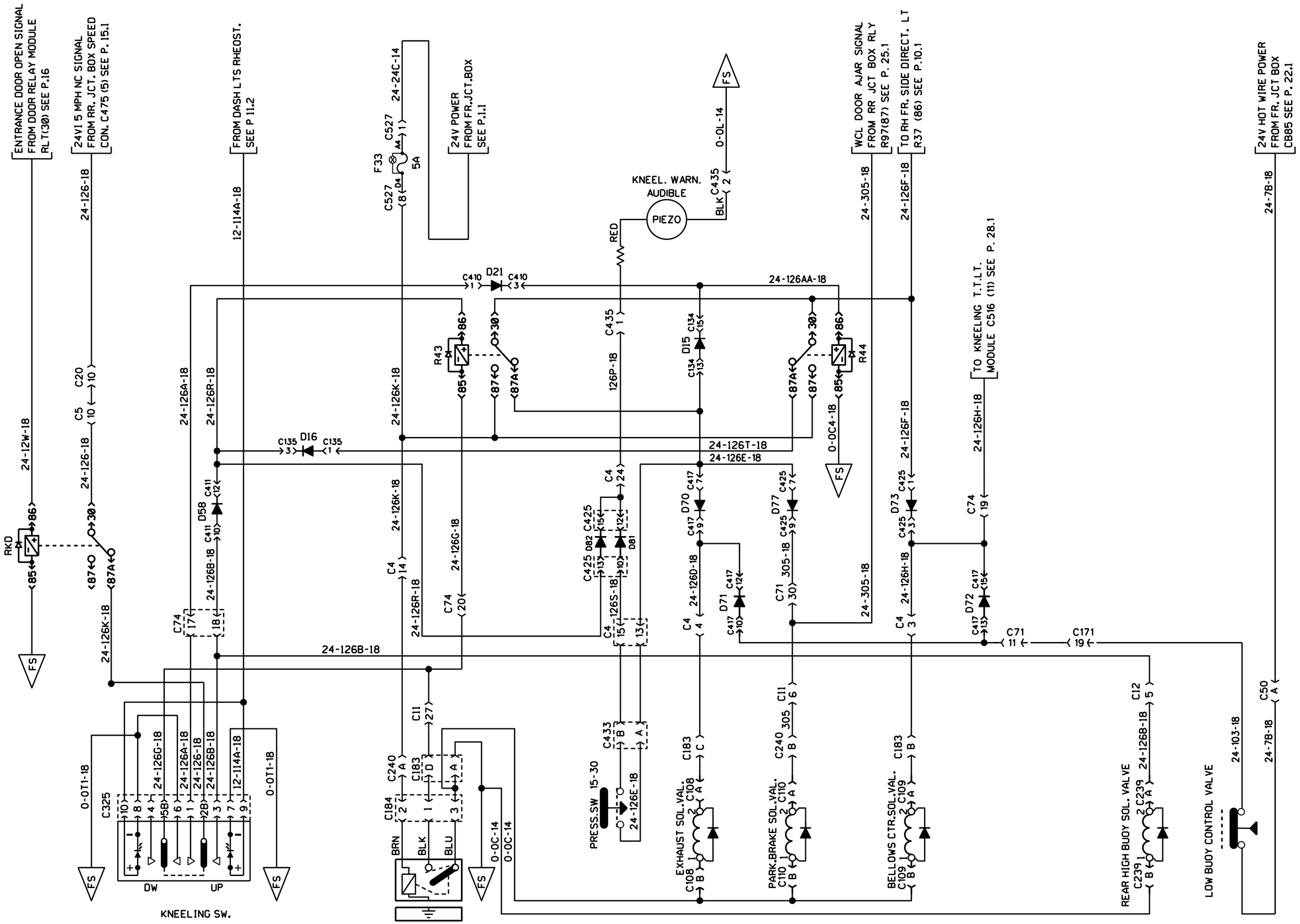

KNEELING OPERATE WHEN THE ENTRANCE DOOR IS CLOSE | HI BUOY | LOW BUOY

PREVOST	WIRING DIAGRAM	NO: D060902	PAGE: 18.1 sp1	REVISION 08

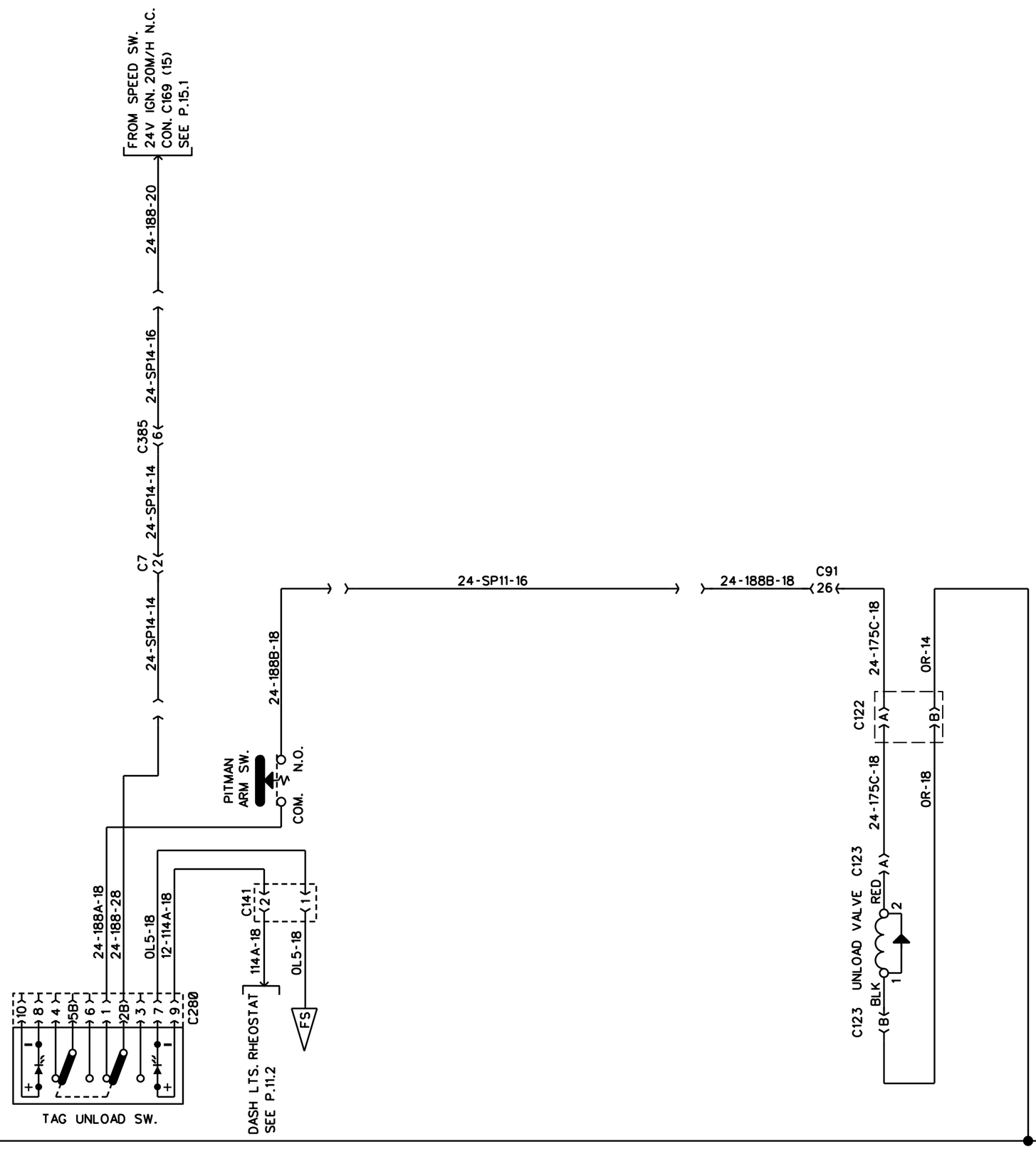

UNLOAD TAG SYSTEM

PREVOST	WIRING DIAGRAM	NO: D060902	PAGE: 18.1sp2	REVISION 00

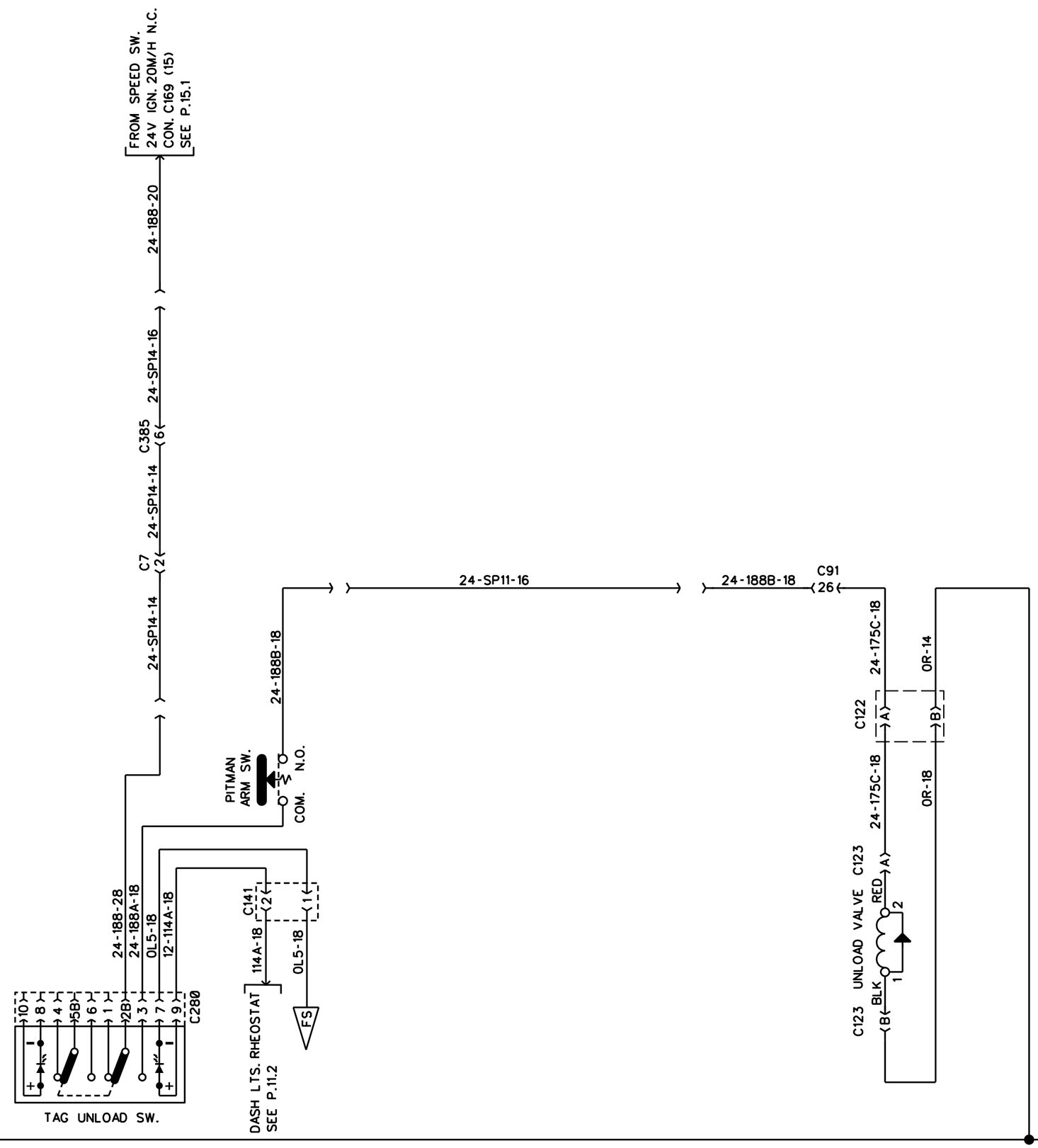

UNLOAD TAG SYSTEM

PREVOST	WIRING DIAGRAM	NO: D060902	PAGE: 18.1sp2	REVISION 01

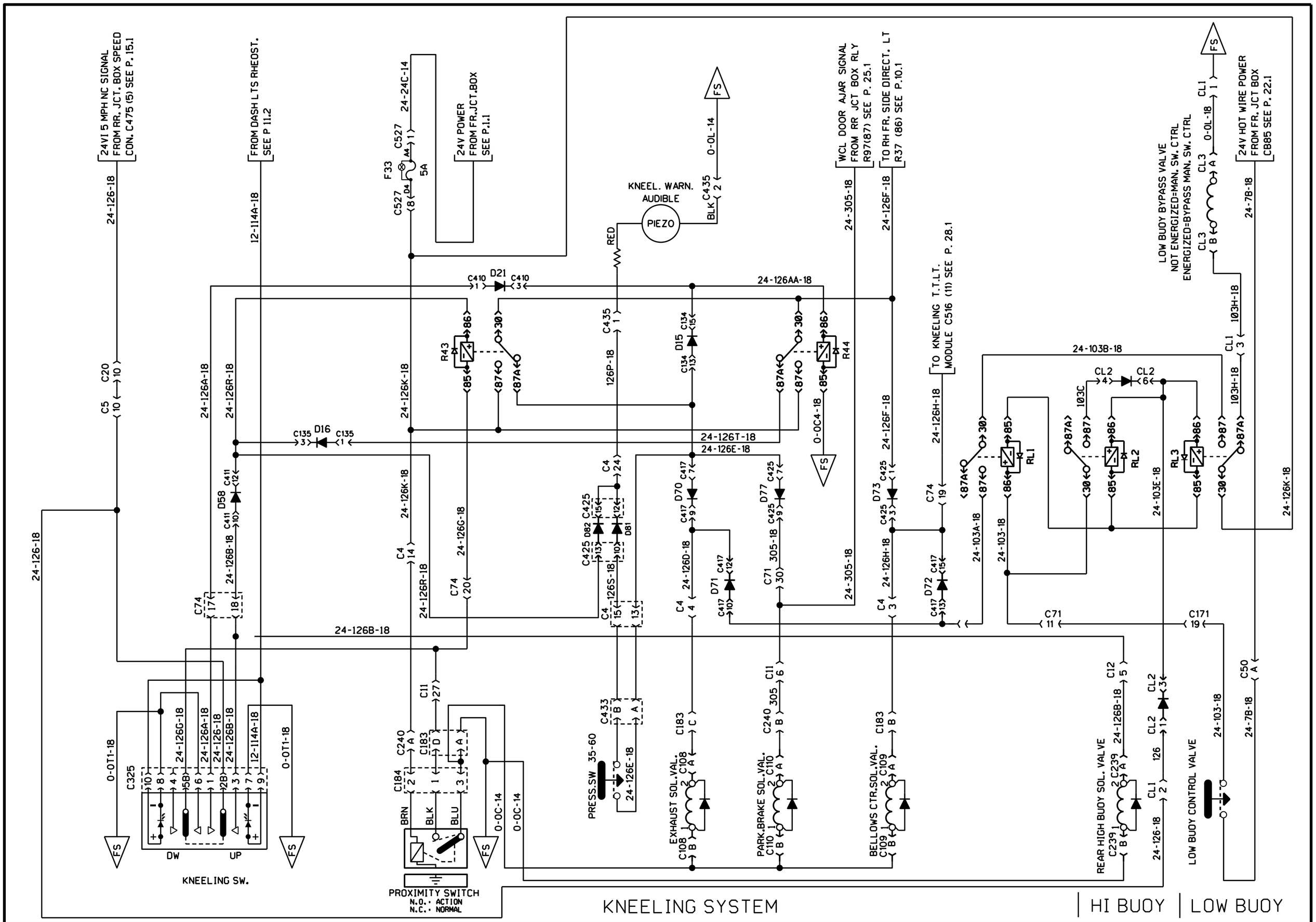

PREVOST	WIRING DIAGRAM	NO: D060902	PAGE: 18.1sp3	REVISION 00

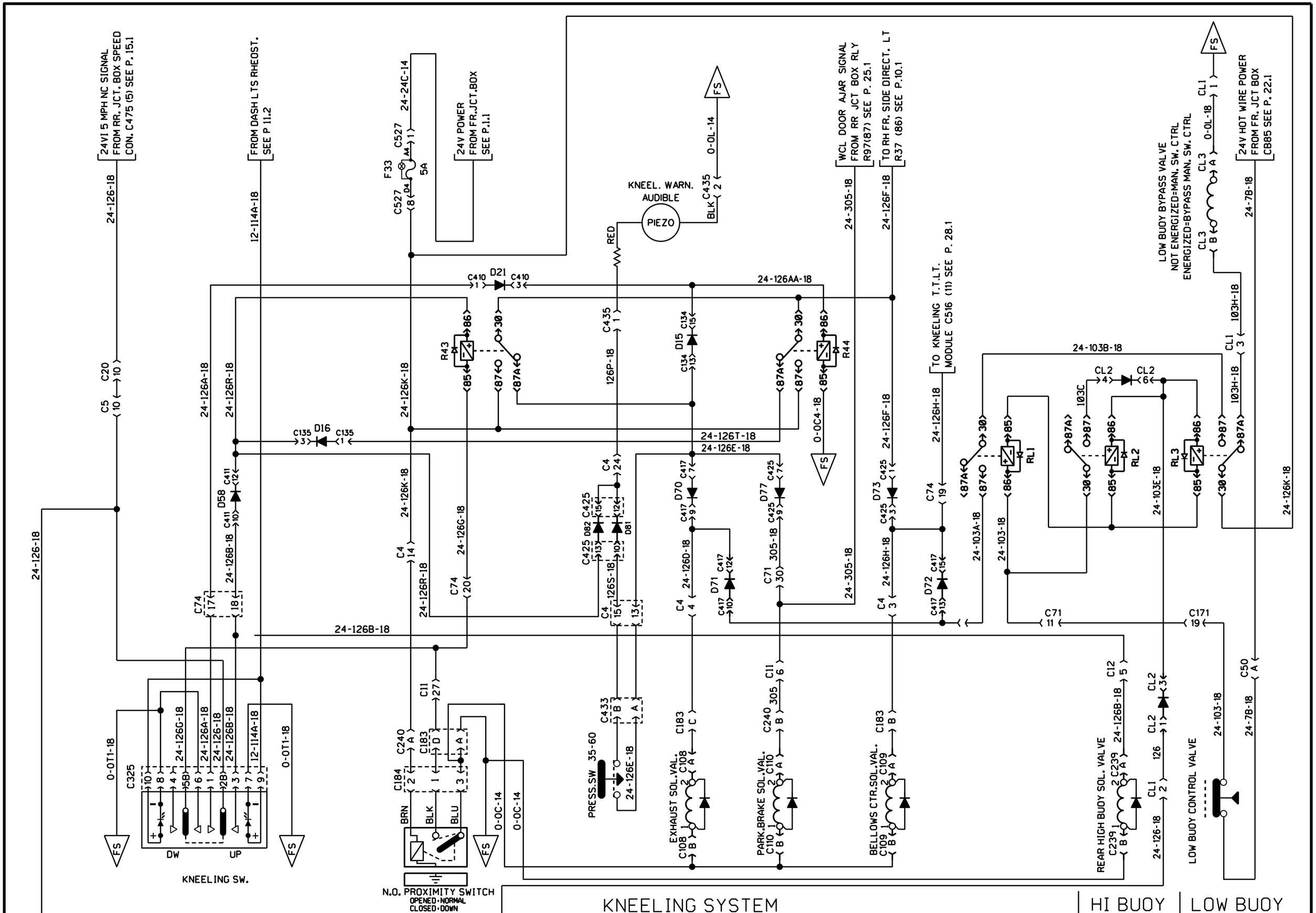

PREVOST	WIRING DIAGRAM	NO: D060902	PAGE: 18.1sp3	REVISION 01

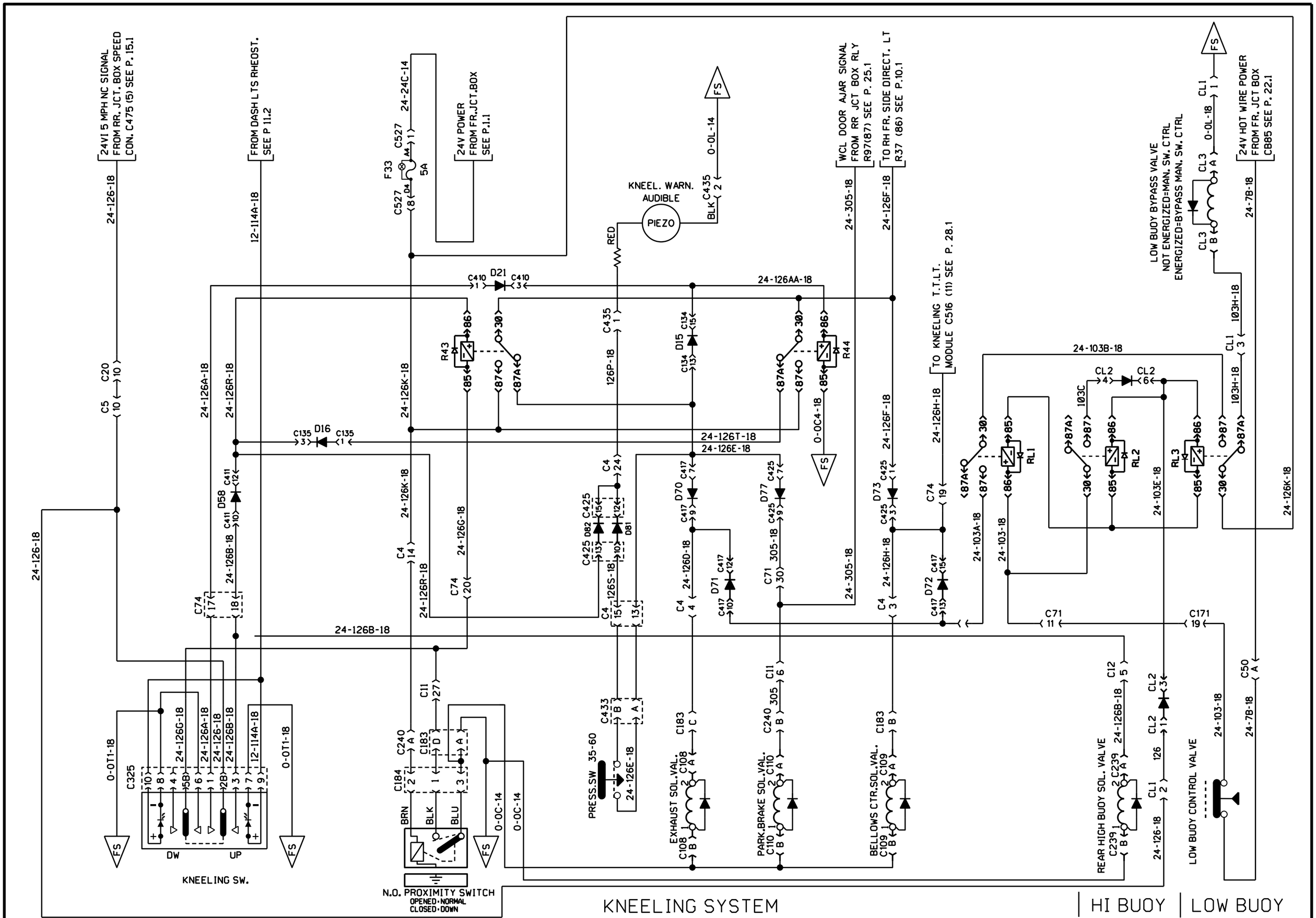

PREVOST	WIRING DIAGRAM	NO: D060902	PAGE: 18.1sp3	REVISION 08

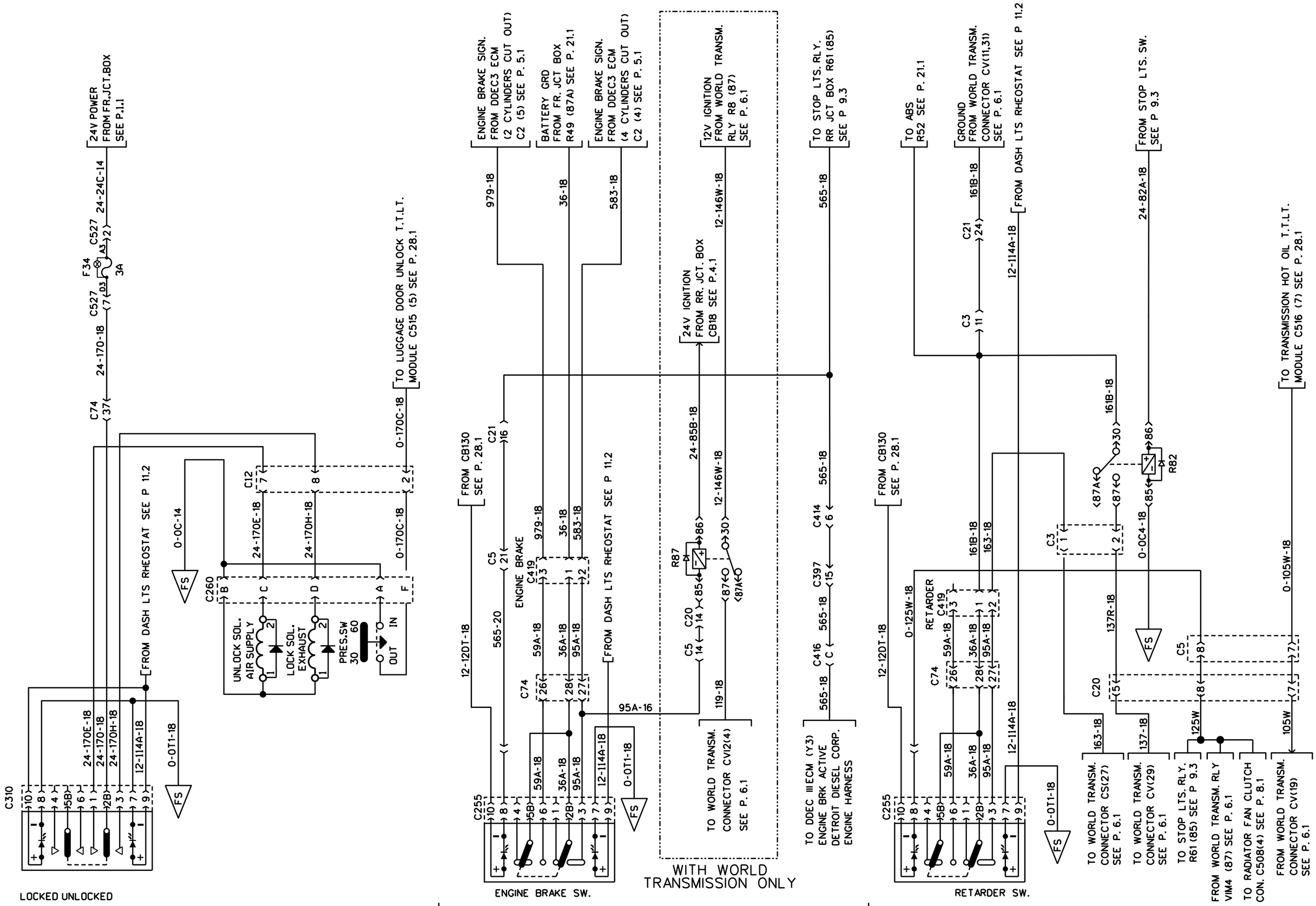

PREVOST	WIRING DIAGRAM	NO: D060902	PAGE: 19.1	REVISION 00

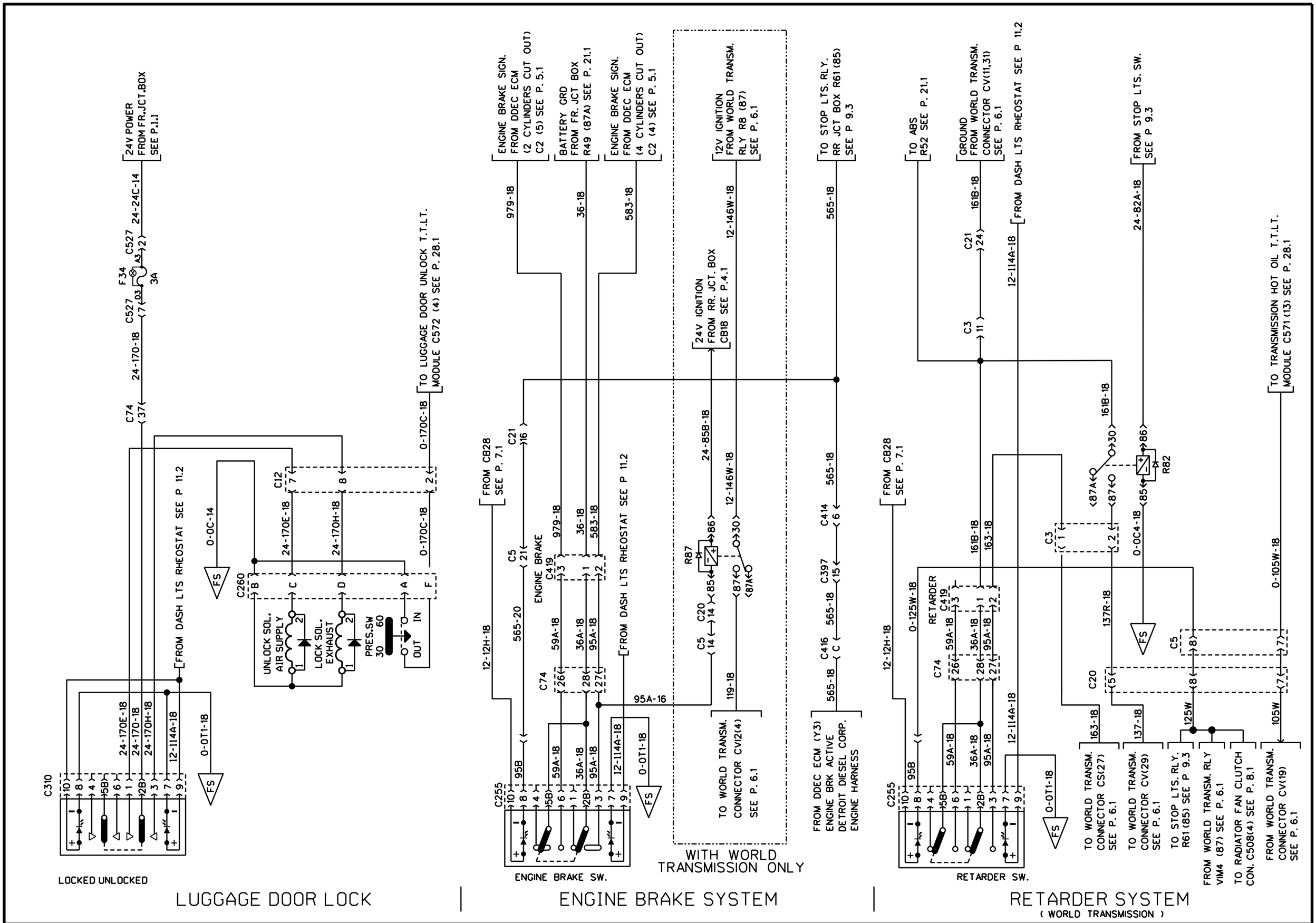
24V POWER FROM FR.JCT.BOX SEE P.1.1
24-24C-14
C527
F34
3A
24-170-18
C74
FROM DASH LTS RHEOSTAT SEE P 11.2
0-0C-14
FS
C260
UNLOCK SOL. AIR SUPPLY
LOCK SOL. EXHAUST
PRES.SW
OUT
IN
24-170E-18
24-170H-18
C12
0-170C-18
TO LUGGAGE DOOR UNLOCK T.T.L.T. MODULE C572 (4) SEE P. 28.1
C310
12-114A-18
0-0T1-18
LOCKED UNLOCKED
LUGGAGE DOOR LOCK
ENGINE BRAKE SIGN. FROM DDEC ECM (2 CYLINDERS CUT OUT) C2 (5) SEE P. 5.1
979-18
BATTERY GRD FROM FR. JCT BOX R49 (87A) SEE P. 21.1
36-18
ENGINE BRAKE SIGN. FROM DDEC ECM (4 CYLINDERS CUT OUT) C2 (4) SEE P. 5.1
583-18
12V IGNITION FROM WORLD TRANSM. RLY R8 (87) SEE P. 6.1
12-146W-18
TO STOP LTS. RLY. RR JCT BOX R61 (85) SEE P 9.3
565-18
24V IGNITION FROM RR. JCT. BOX CB18 SEE P.4.1
24-85B-18
FROM CB28 SEE P. 7.1
C21
C5
ENGINE BRAKE
C419
C74
12-12H-18
565-20
95B
59A-18
36A-18
95A-18
95A-16
C255
ENGINE BRAKE SW.
R87
C20
119-18
TO WORLD TRANSM. CONNECTOR CV12(4) SEE P. 6.1
WITH WORLD TRANSMISSION ONLY
C414
C397
C416
FROM DDEC ECM (Y3) ENGINE BRK ACTIVE DETROIT DIESEL CORP. ENGINE HARNESS
TO ABS R52 SEE P. 21.1
GROUND FROM WORLD TRANSM. CONNECTOR CV(11,31) SEE P. 6.1
161B-18
FROM DASH LTS RHEOSTAT SEE P 11.2
12-114A-18
C3
FROM STOP LTS. SW. SEE P 9.3
24-82A-18
R82
0-0C4-18
163-18
0-125W-18
RETARDER
137R-18
0-105W-18
TO TRANSMISSION HOT OIL T.T.L.T. MODULE C571 (13) SEE P. 28.1
125W
105W
TO WORLD TRANSM. CONNECTOR CS(27) SEE P. 6.1
TO WORLD TRANSM. CONNECTOR CV(29) SEE P. 6.1
TO STOP LTS. RLY. R61 (85) SEE P 9.3
FROM WORLD TRANSM. RLY VIM4 (87) SEE P. 6.1
TO RADIATOR FAN CLUTCH CON. C508(4) SEE P. 8.1
FROM WORLD TRANSM. CONNECTOR CV(19) SEE P. 6.1
RETARDER SW.
ENGINE BRAKE SYSTEM
RETARDER SYSTEM
(WORLD TRANSMISSION)

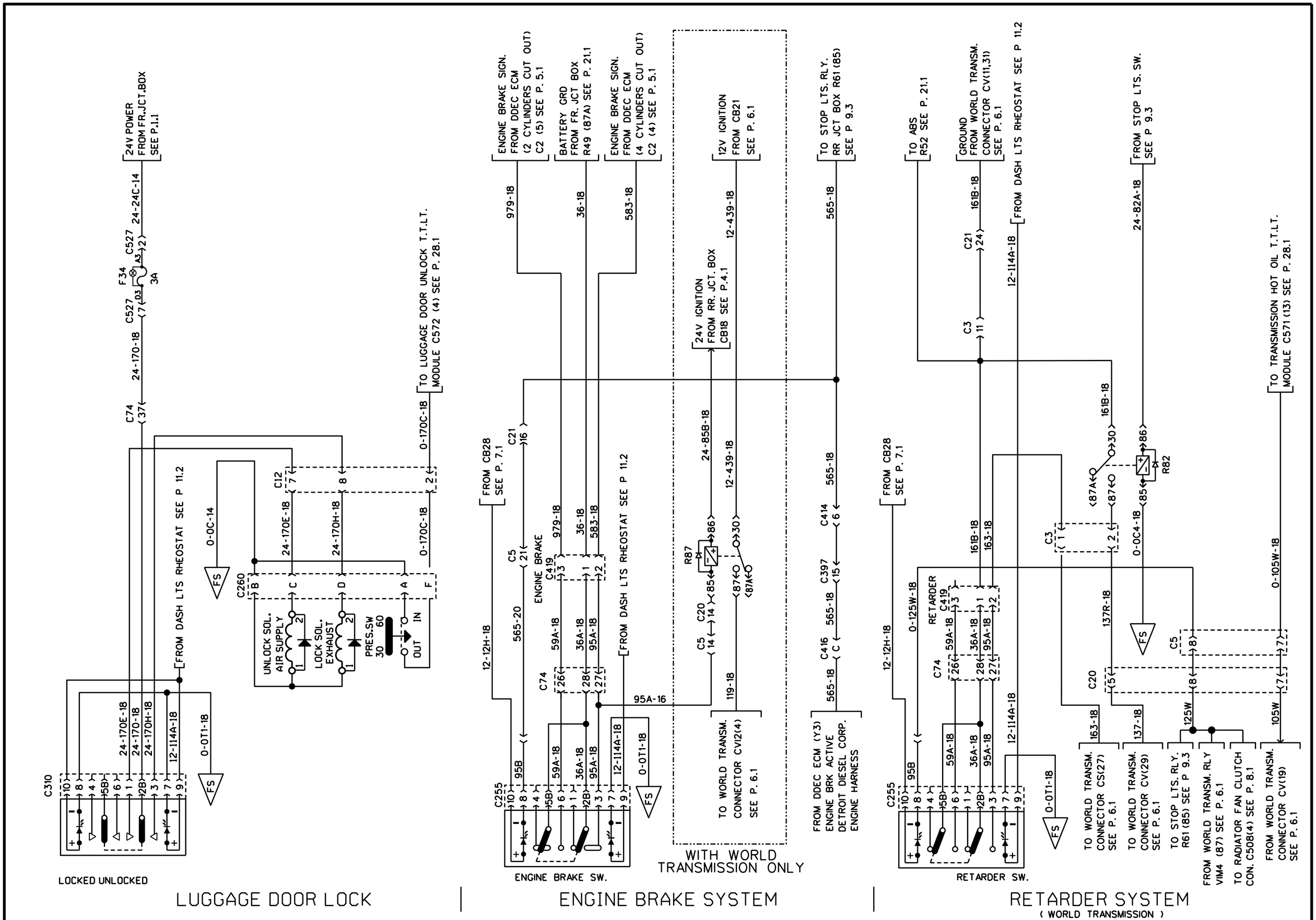

PREVOST	WIRING DIAGRAM	NO: D060902	PAGE: 19.1	REVISION 09

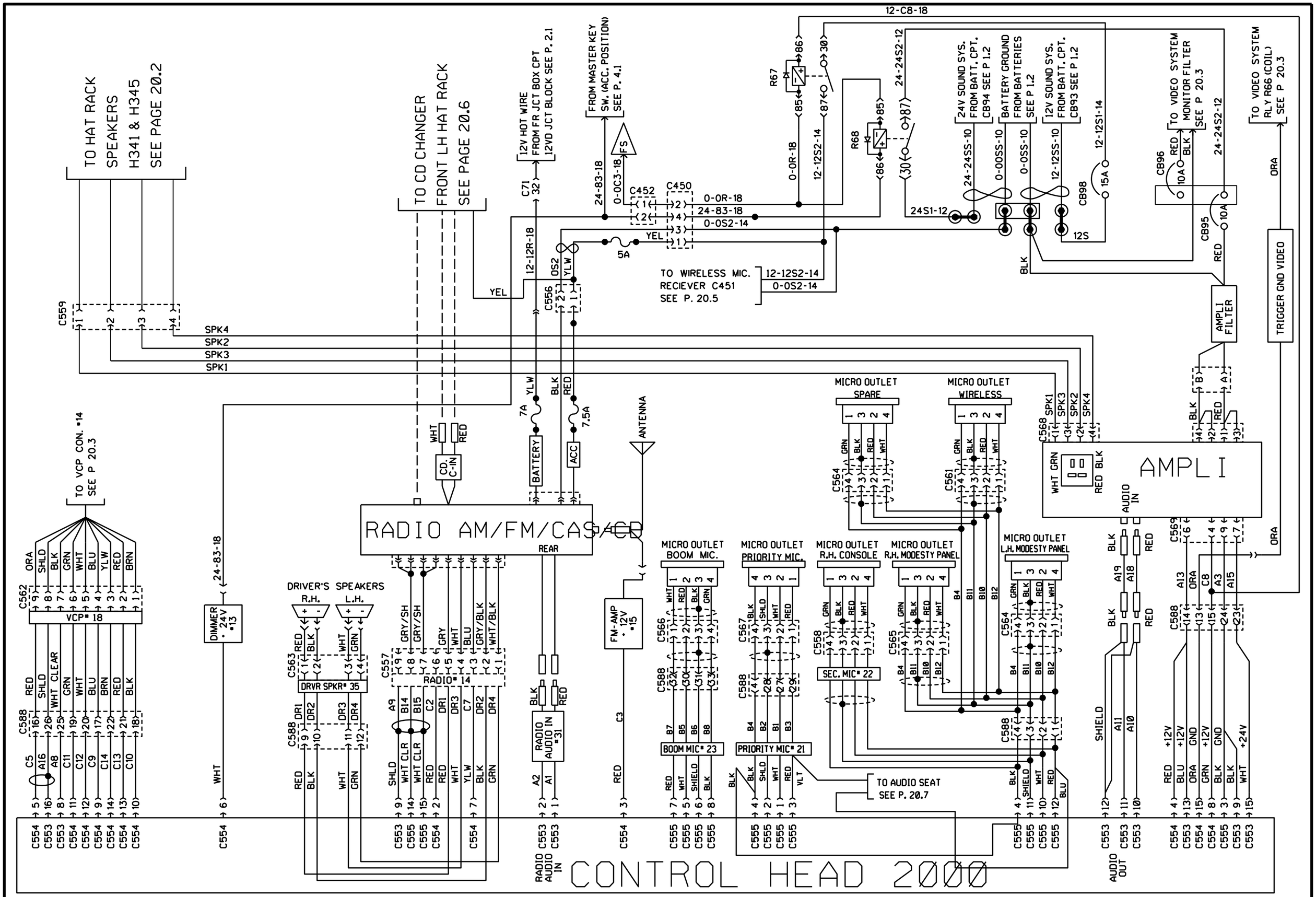

SOUND SYSTEM H3-45

PREVOST	WIRING DIAGRAM	NO: D060902	PAGE: 20.1	REVISION 00

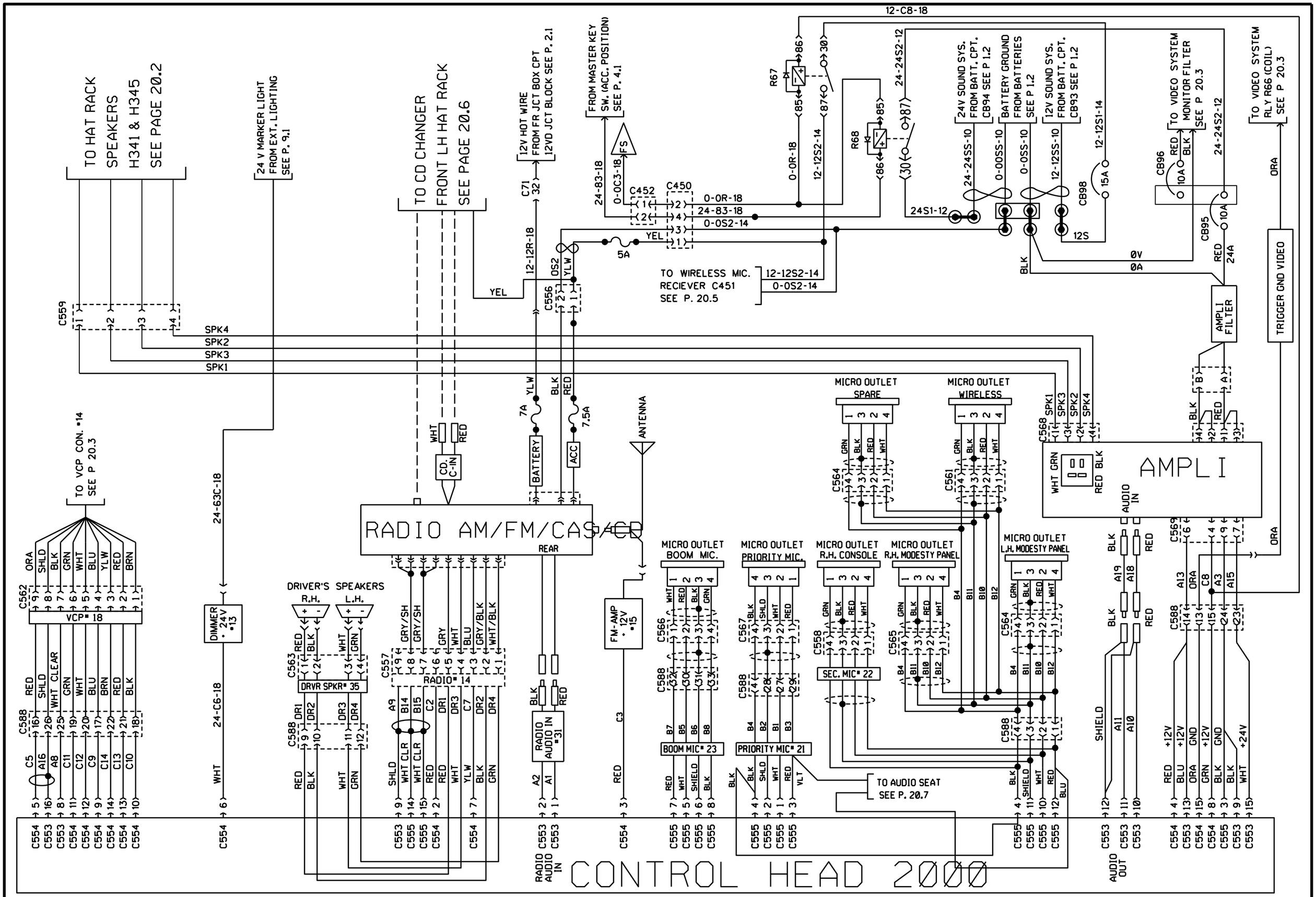

PREVOST	WIRING DIAGRAM	NO: D060902	PAGE: 20.1	REVISION 01

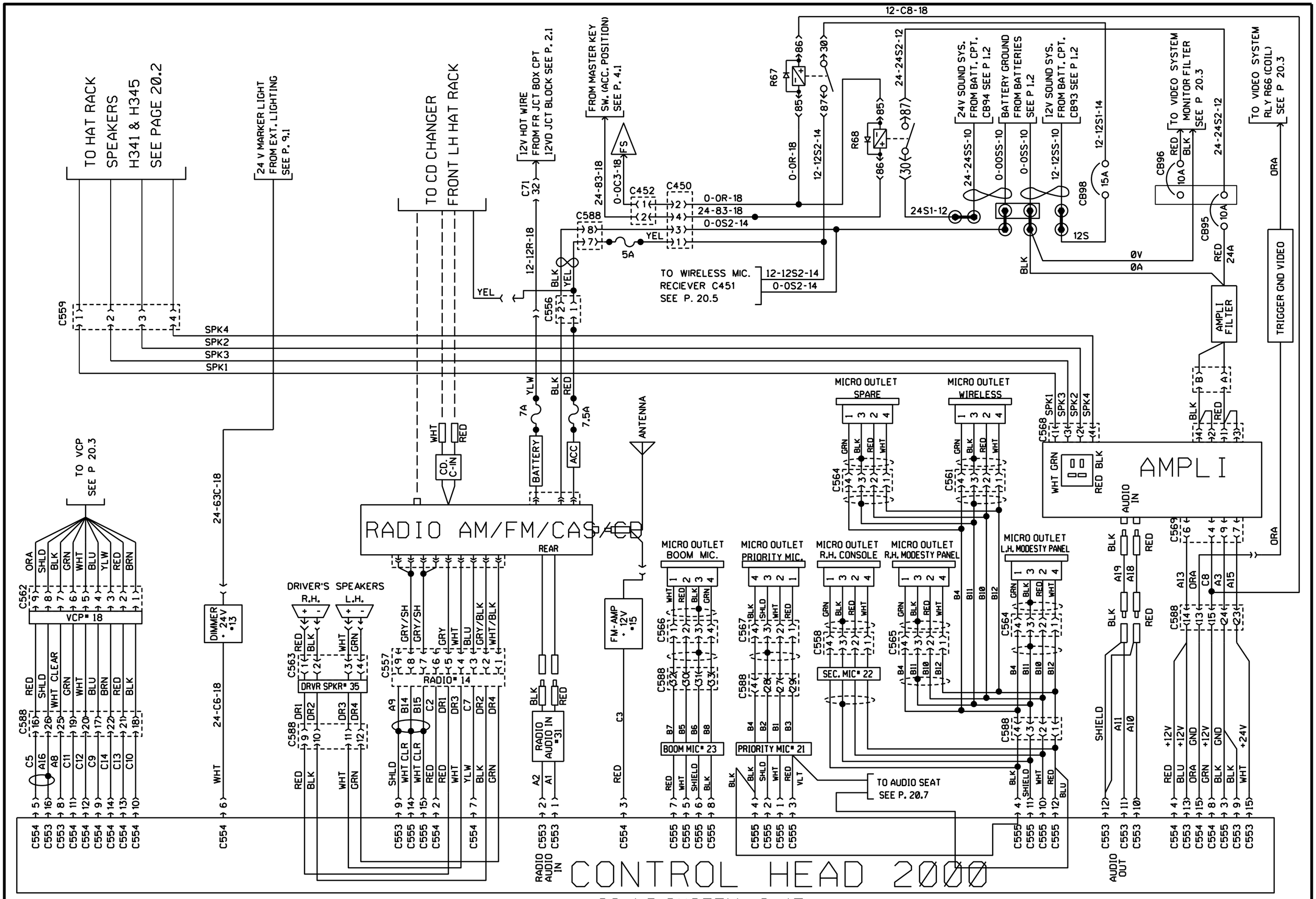

SOUND SYSTEM H3-45

PREVOST	WIRING DIAGRAM	NO: D060902	PAGE: 20.1	REVISION 08

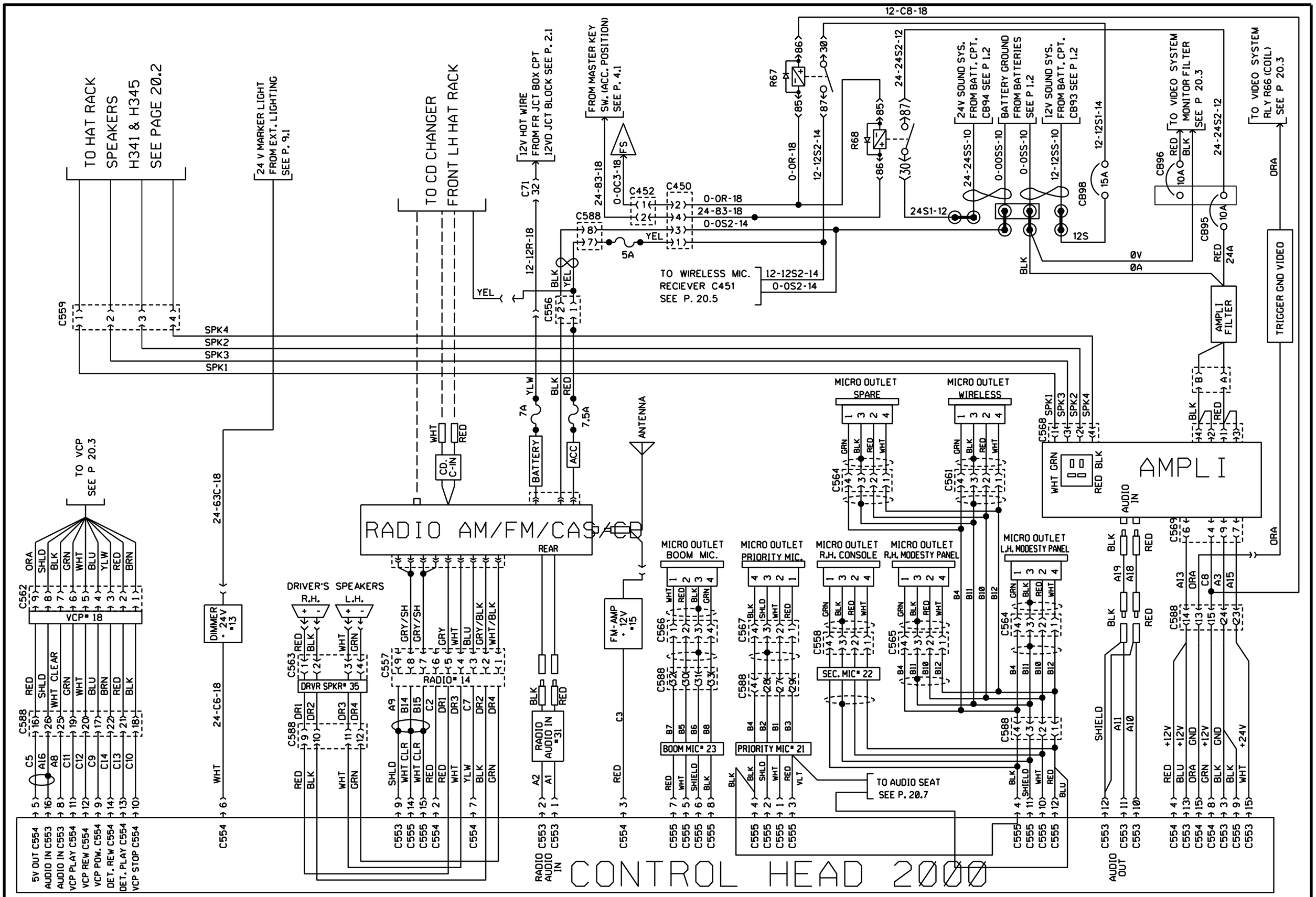

SOUND SYSTEM H3-45

PREVOST	WIRING DIAGRAM	NO: D060902	PAGE: 20.1	REVISION 12

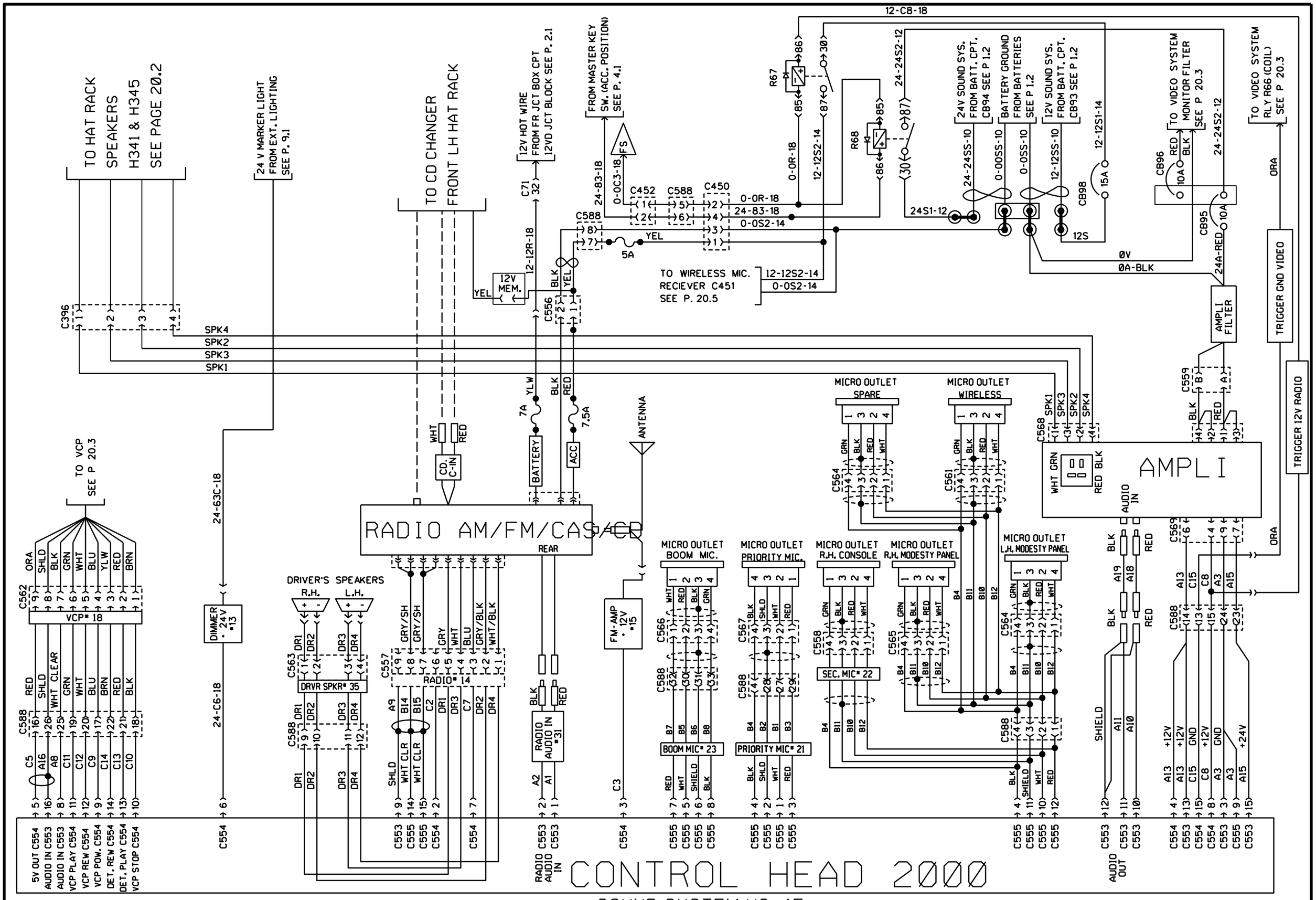

SOUND SYSTEM H3-45

PREVOST	WIRING DIAGRAM	NO: D060902	PAGE: 20.1	REVISION 17

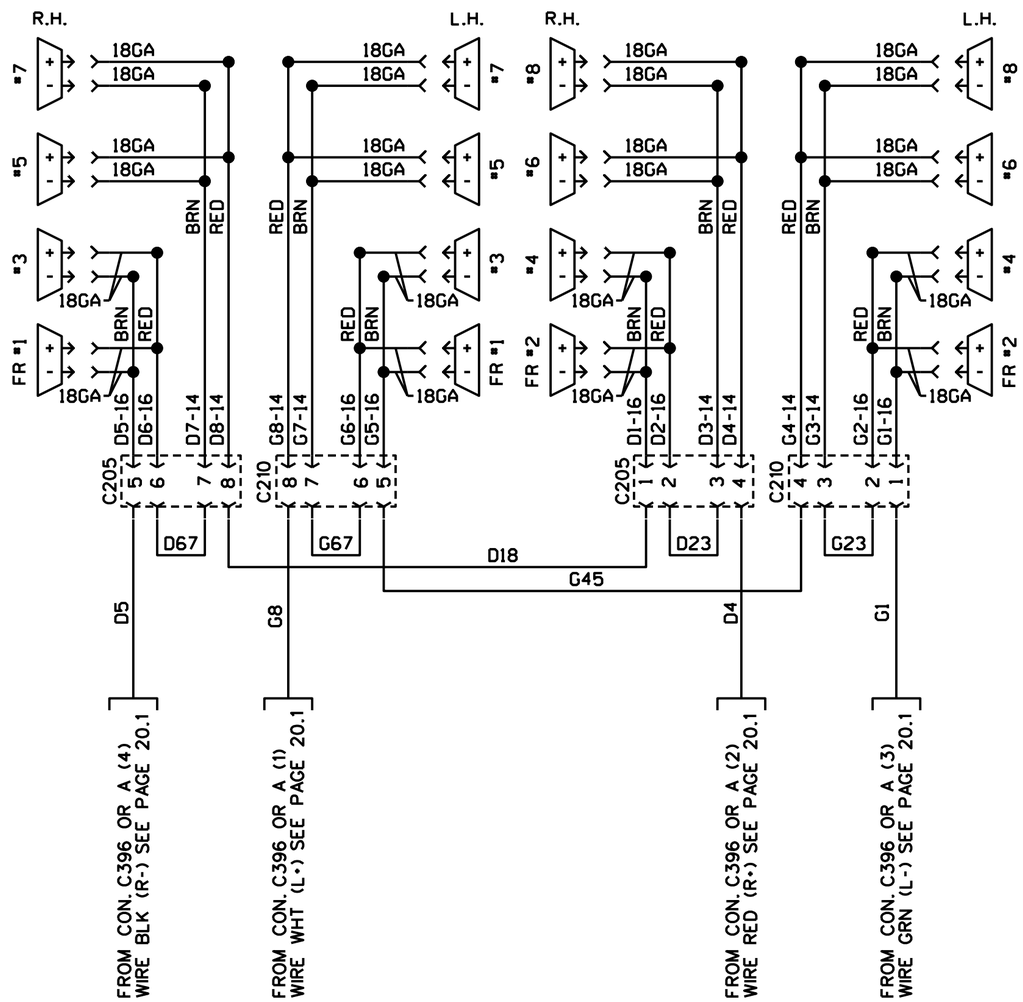

HAT RACK SPEAKERS H3-45

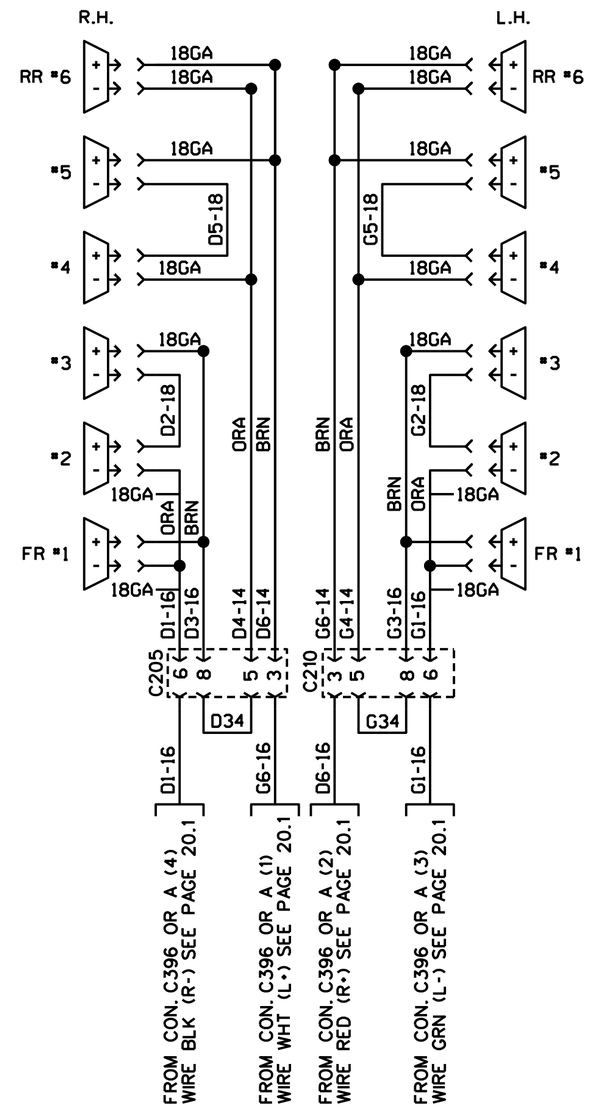

HAT RACK SPEAKERS H3-41

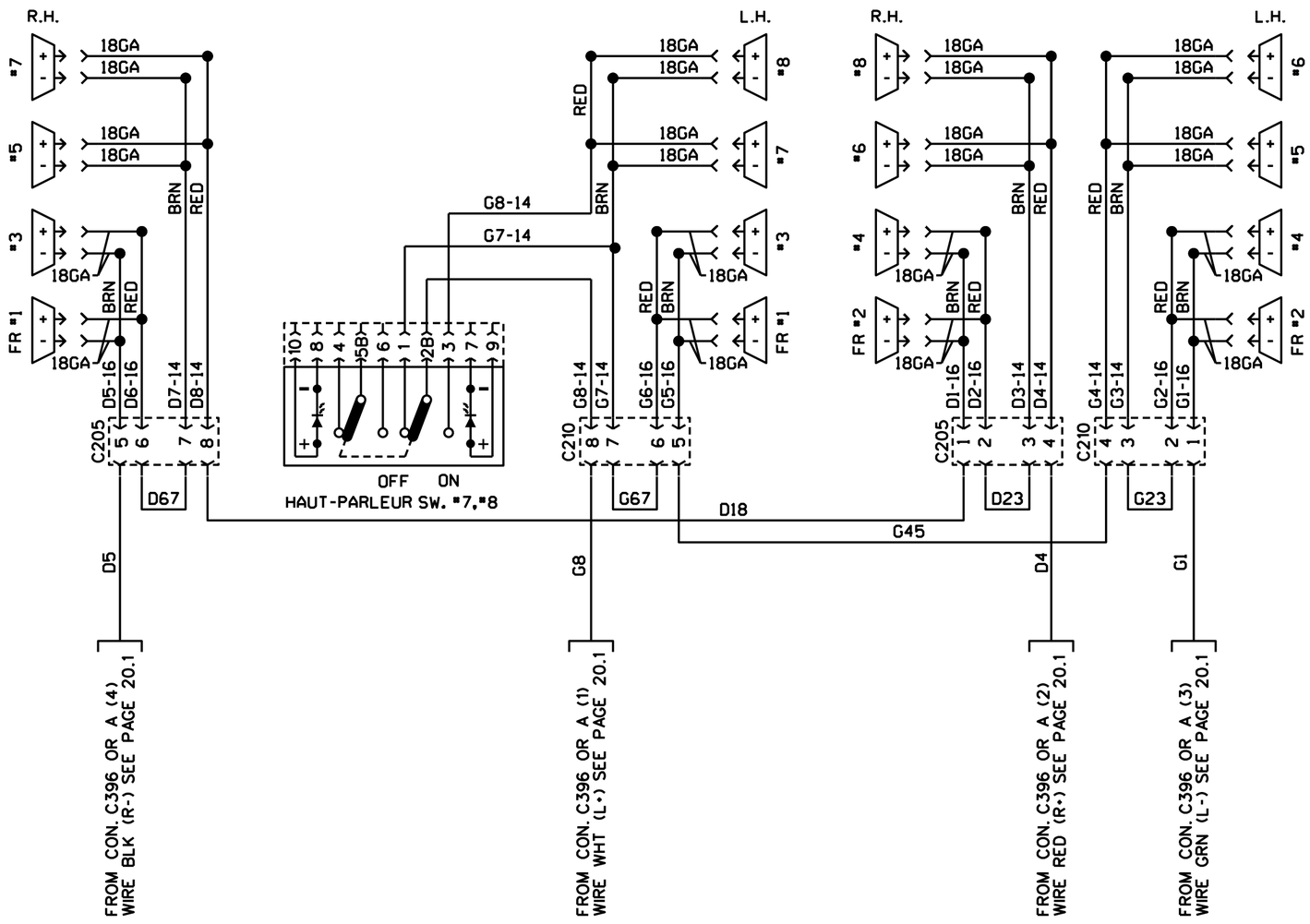

HAT RACK SPEAKERS H3-45

X3298 (LIMOCAR)

PREVOST	WIRING DIAGRAM	NO: D060902	PAGE: 20.2 SP1	REVISION 00

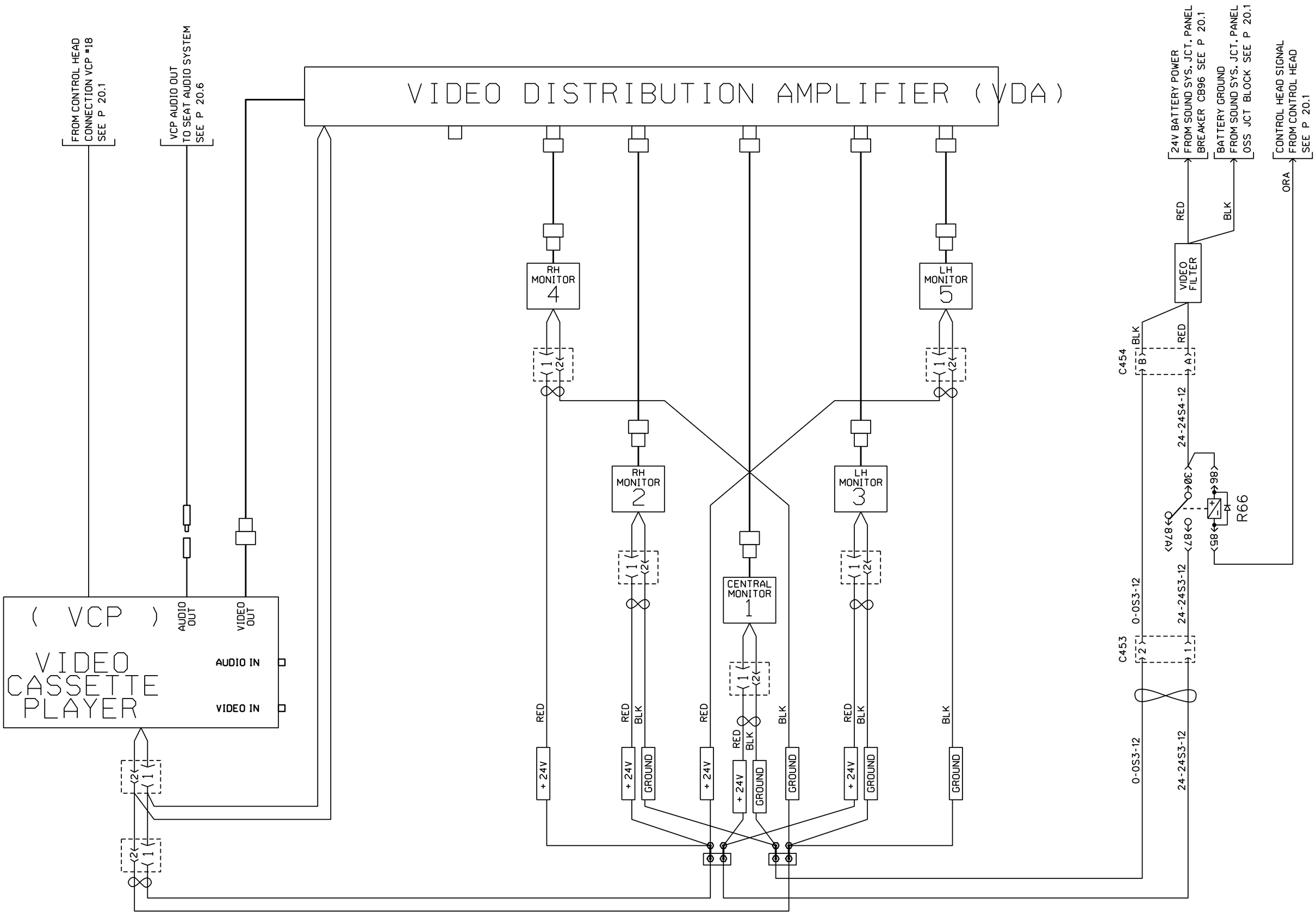

VIDEO SYSTEM

PREVOST	WIRING DIAGRAM	NO: D060902	PAGE: 20.3	REVISION 00

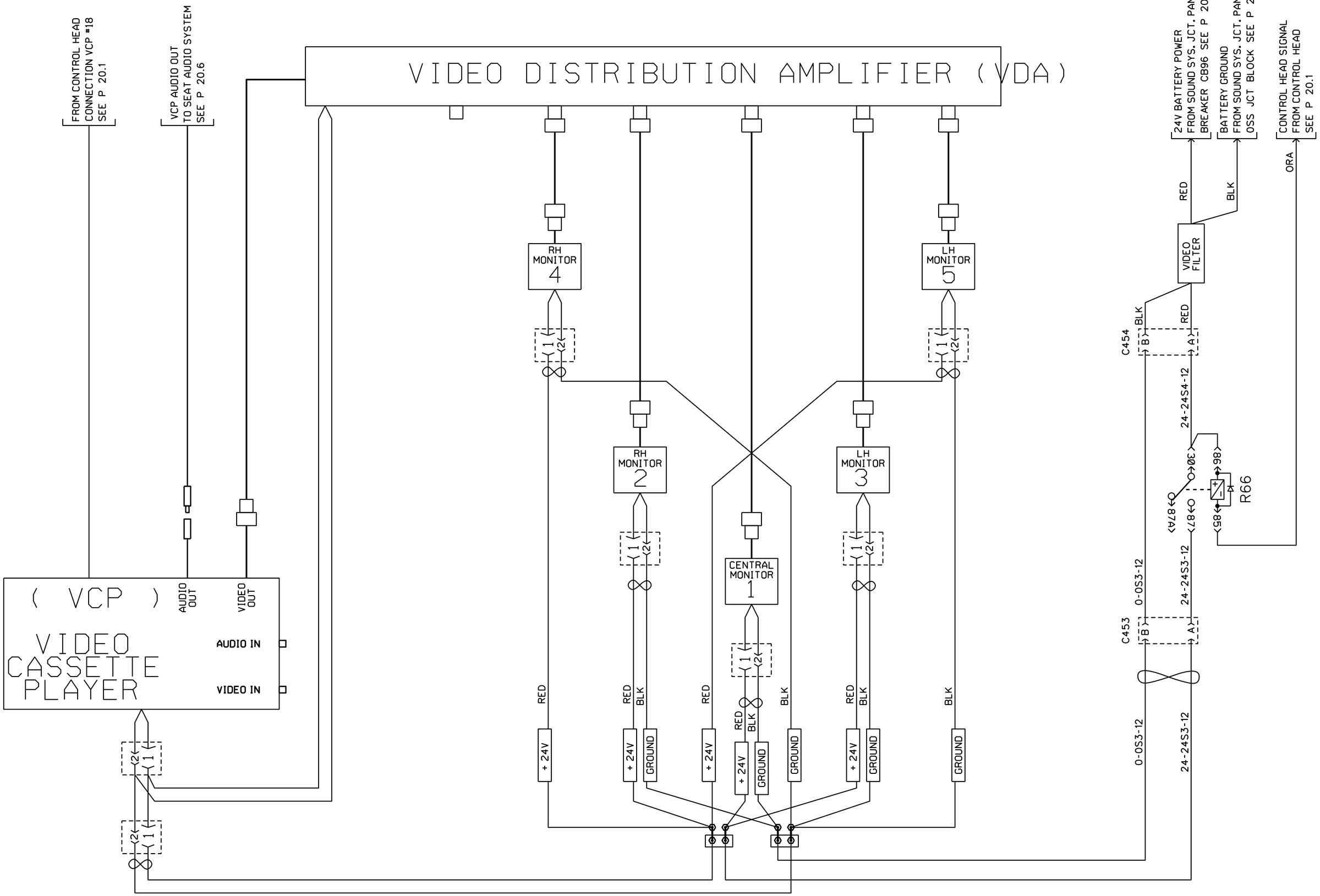

VIDEO SYSTEM

PREVOST	WIRING DIAGRAM	NO: D060902	PAGE: 20.3	REVISION 01

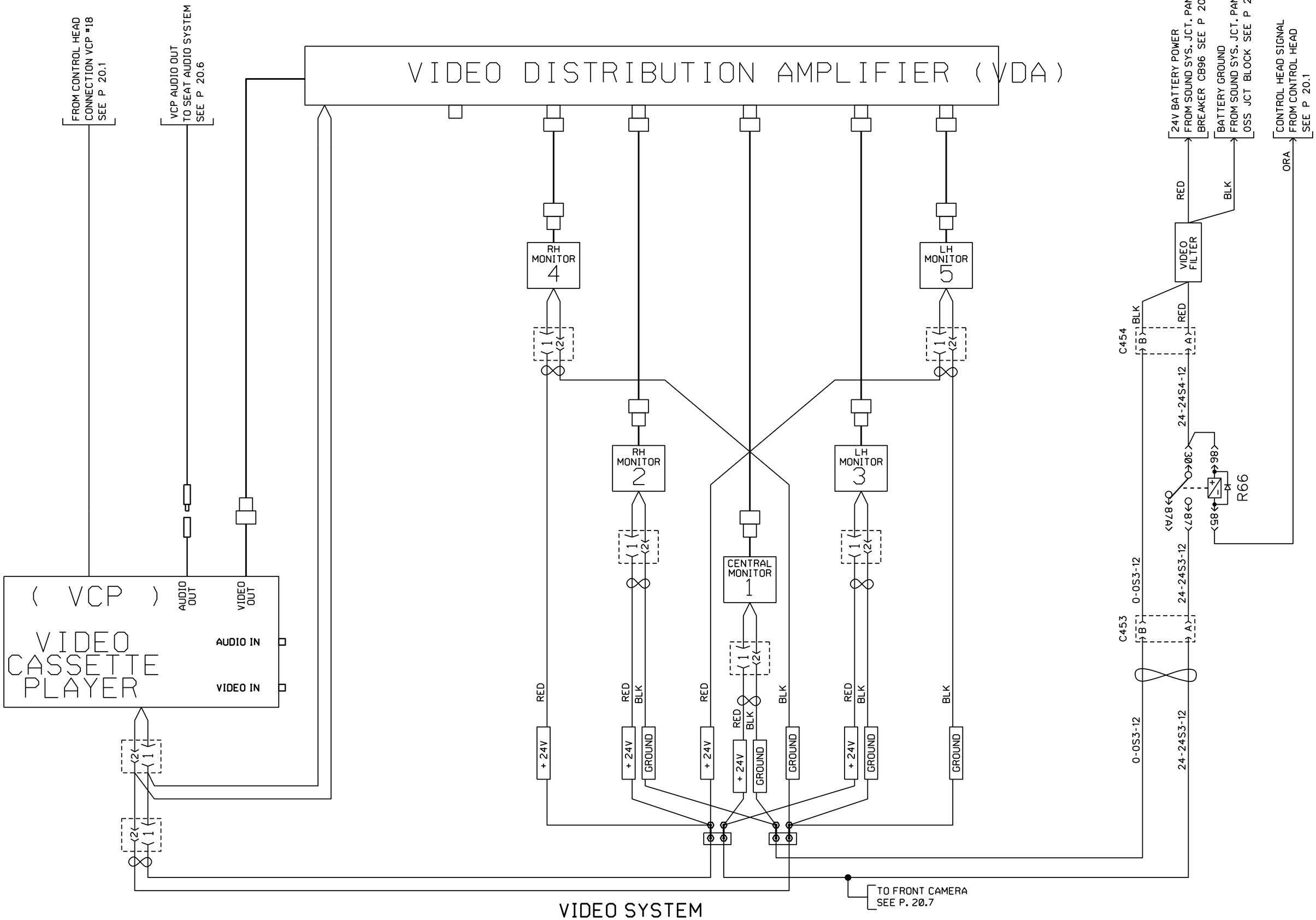

VIDEO SYSTEM

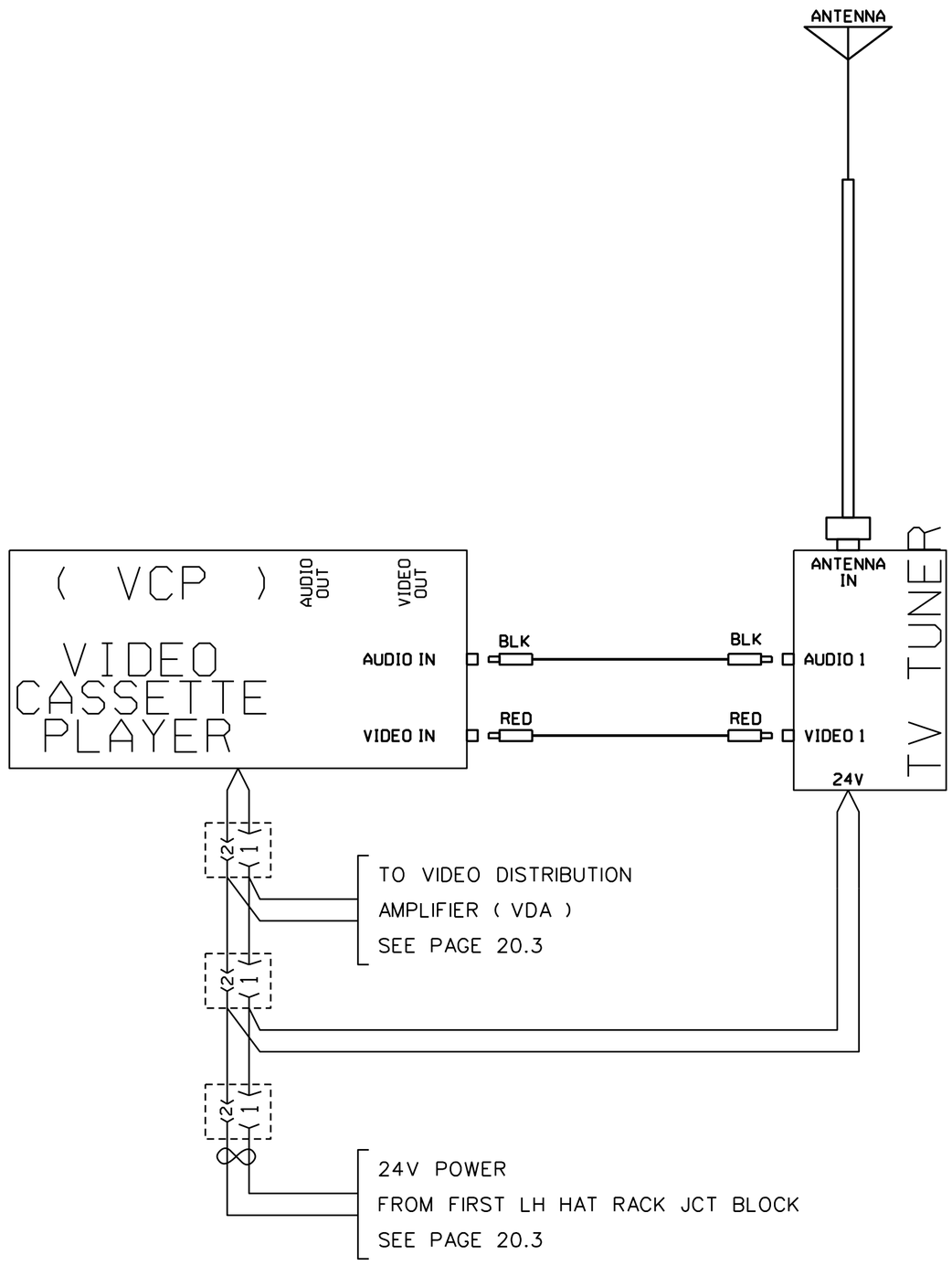

TV RECEIVER

PREVOST	WIRING DIAGRAM	NO: D060902	PAGE: 20.4	REVISION 00

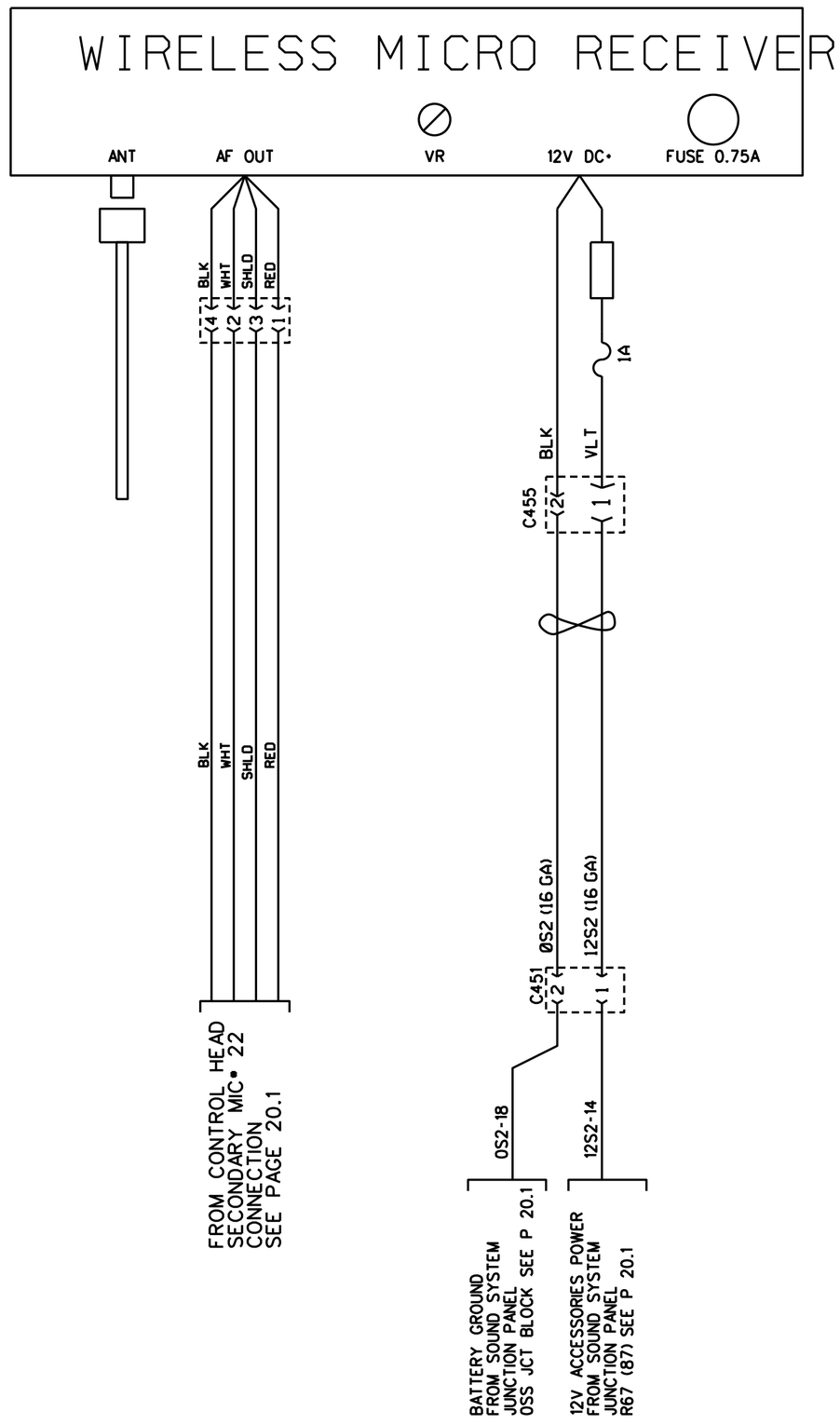

WIRELESS MICROPHONE

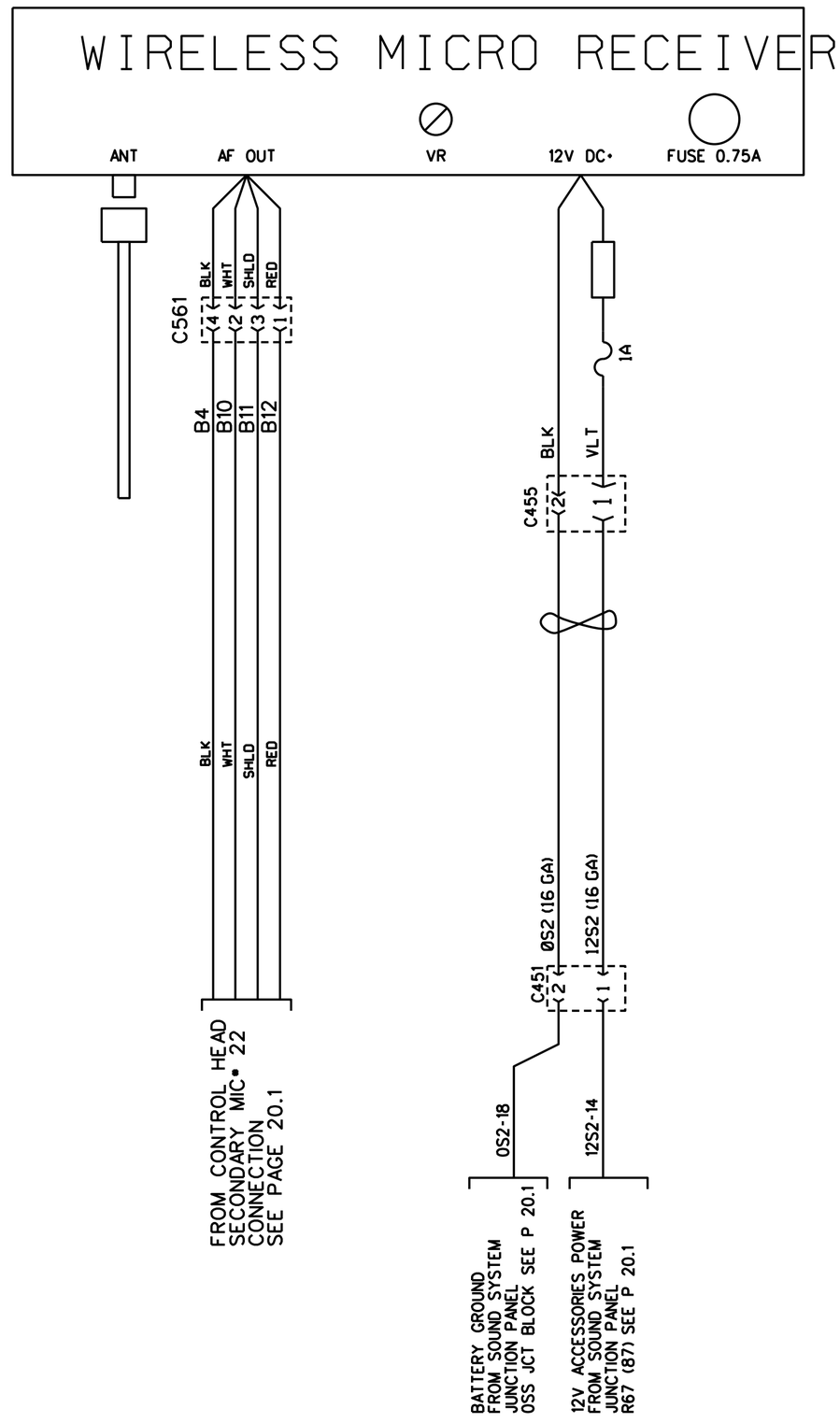

WIRELESS MICROPHONE

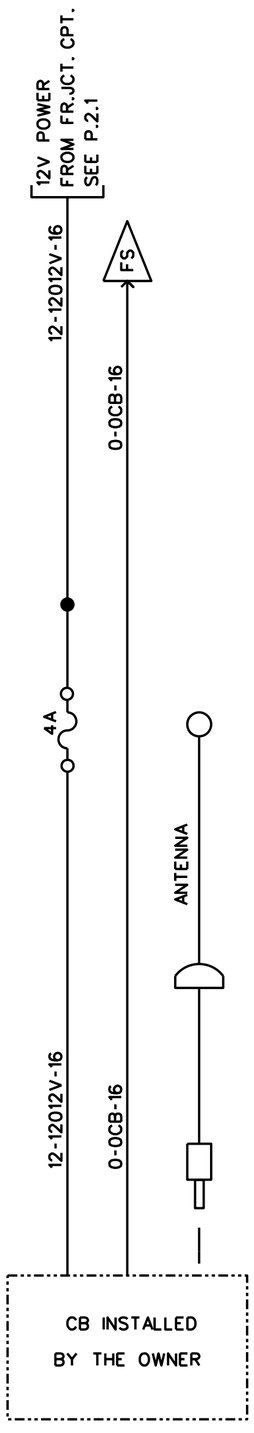

CB OPTION

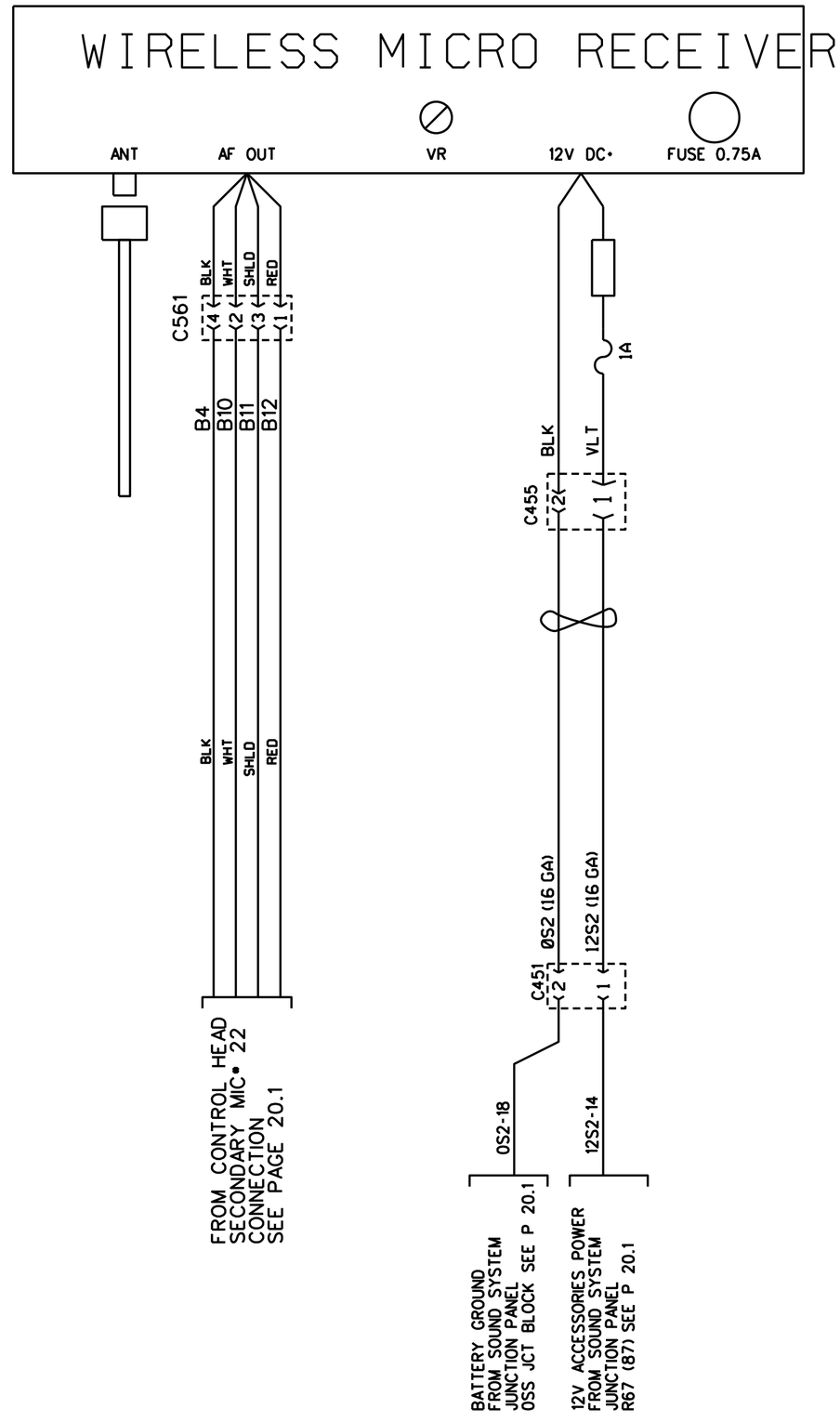

WIRELESS MICROPHONE

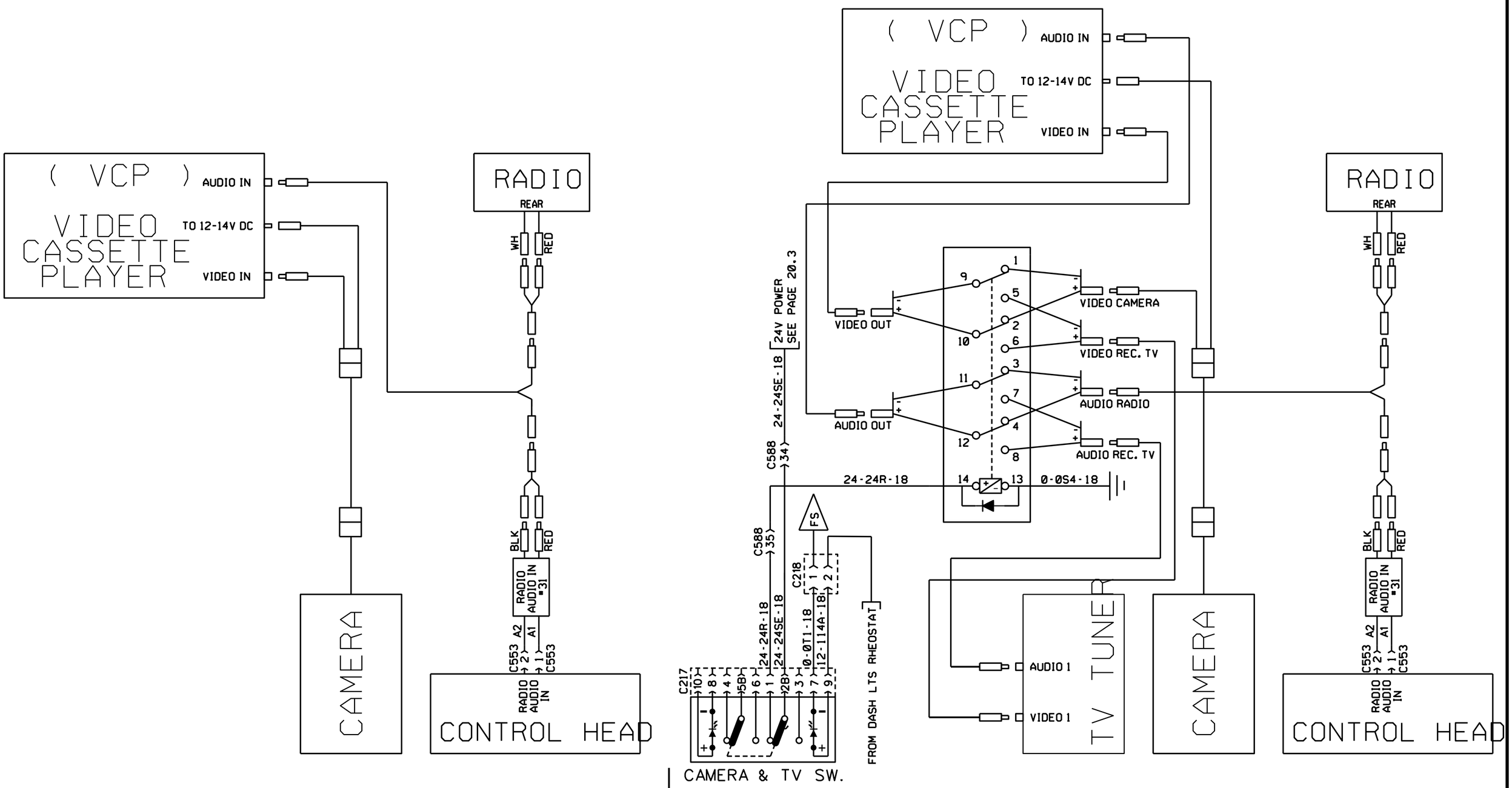

FRONT CAMERA WITHOUT TV RECEIVER

FRONT CAMERA WITH TV RECEIVER

PREVOST	WIRING DIAGRAM	NO: D060902	PAGE: 20.7	REVISION 12

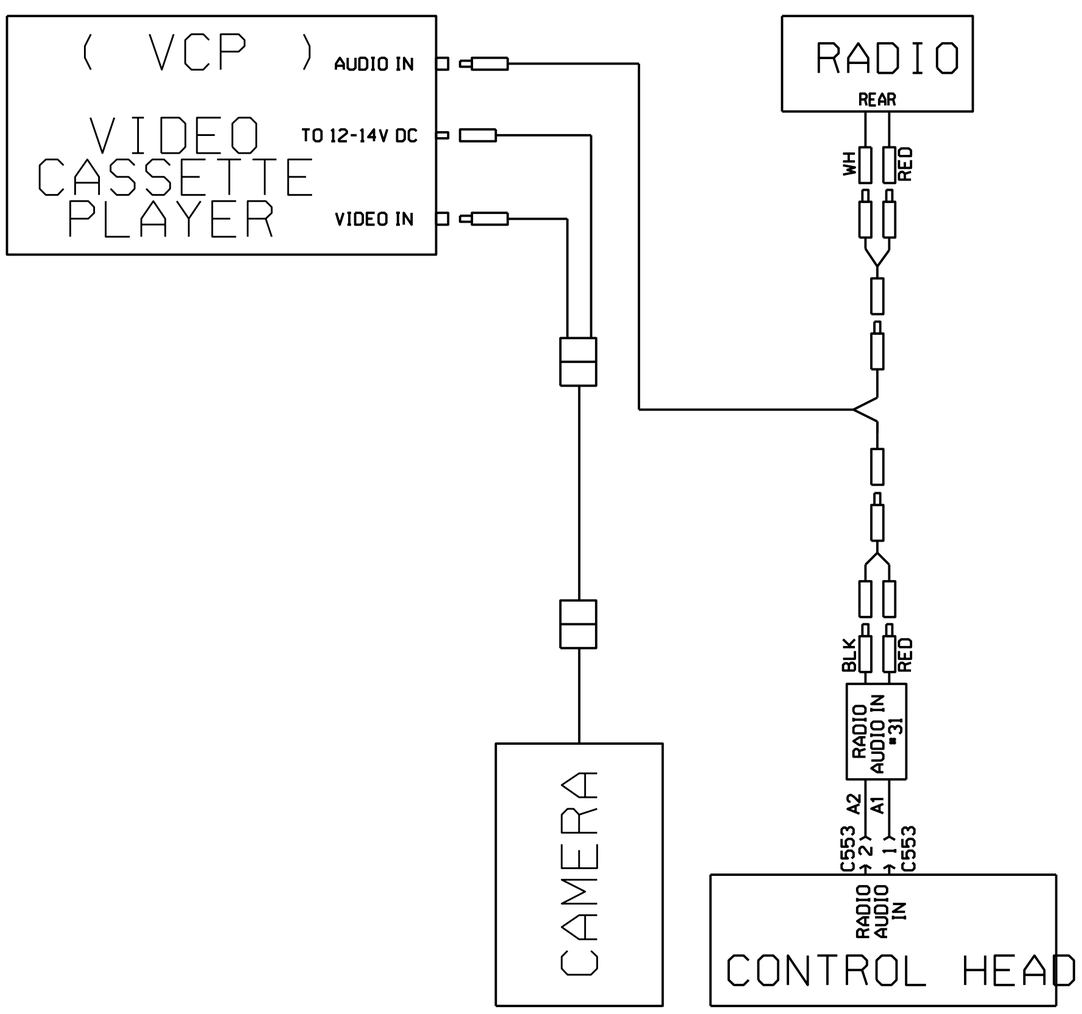

FRONT CAMERA WITHOUT TV RECEIVER

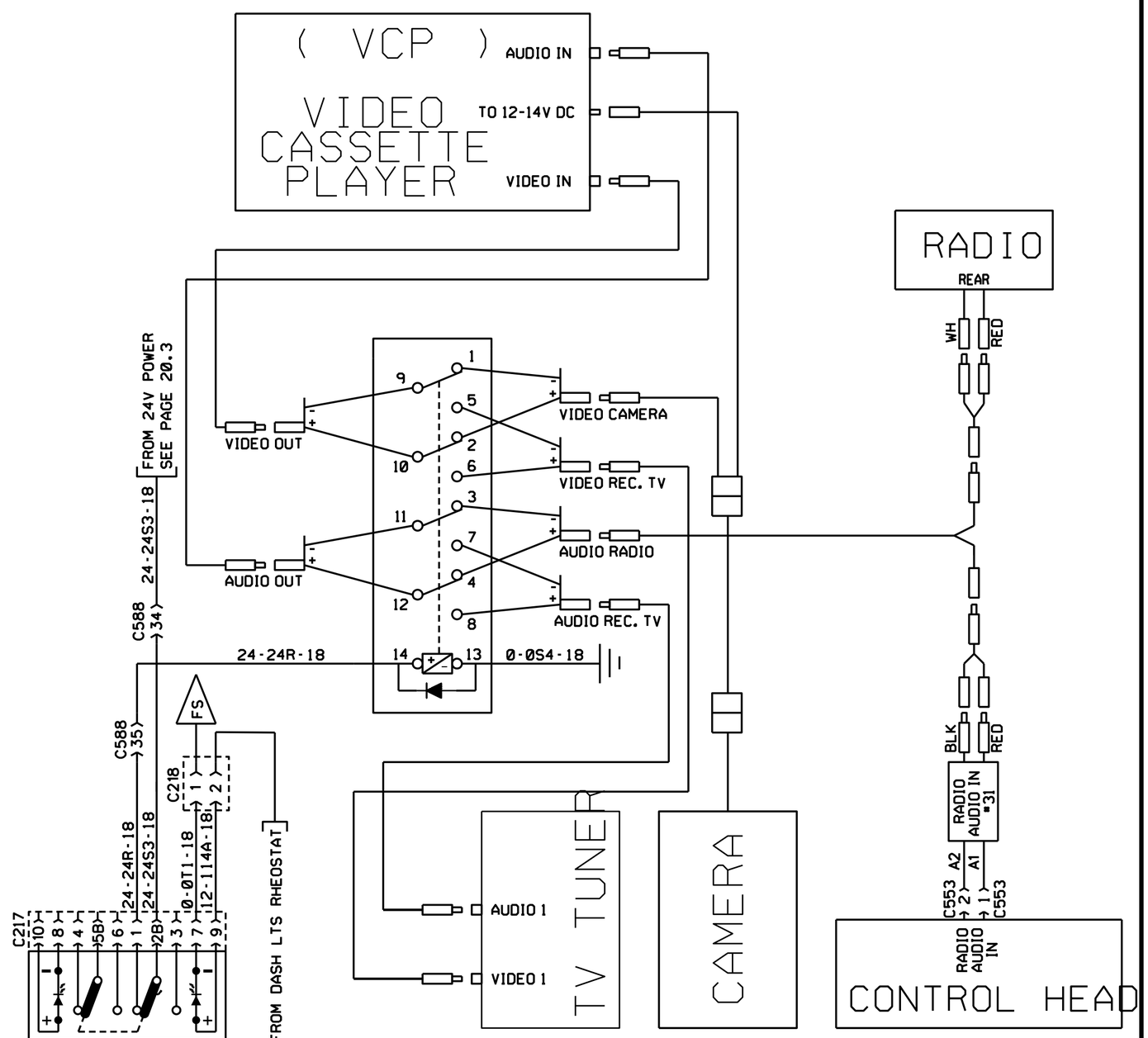

CAMERA & TV SW.

FRONT CAMERA WITH TV RECEIVER

PREVOST	WIRING DIAGRAM	NO: D060902	PAGE: 20.7	REVISION 17

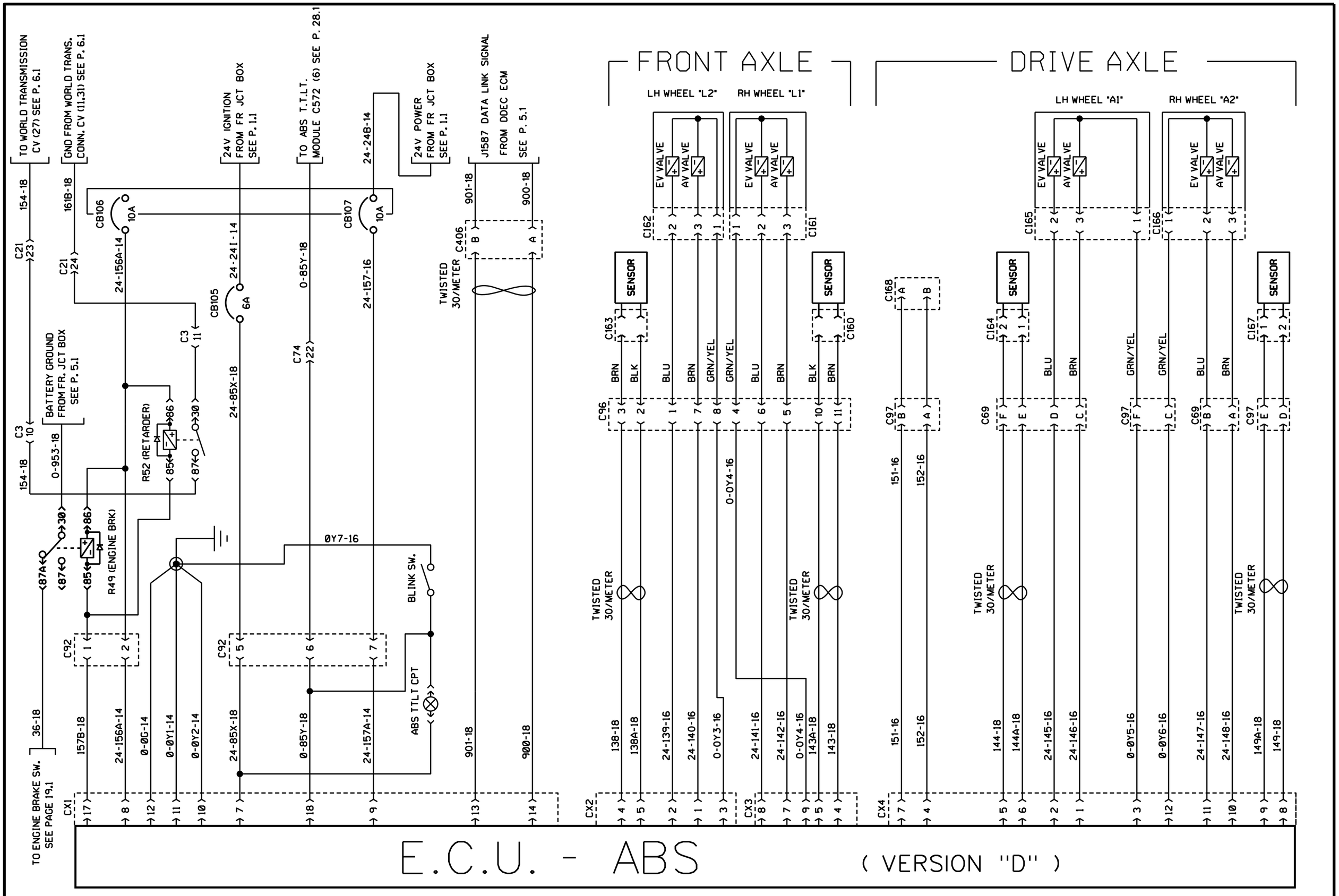

PREVOST	WIRING DIAGRAM	NO: D060902	PAGE: 21.1	REVISION 00

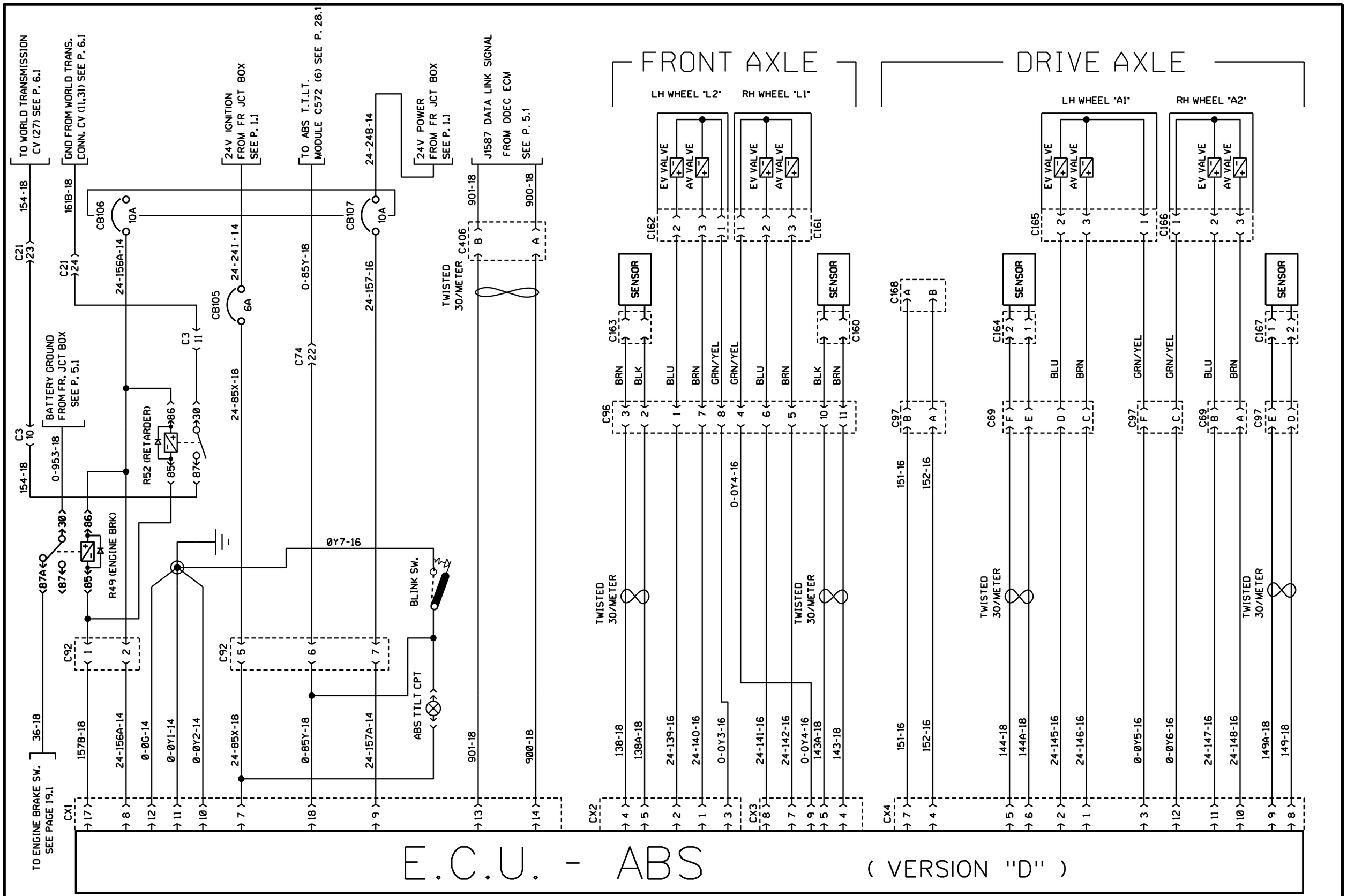

PREVOST	WIRING DIAGRAM	NO: D060902	PAGE: 21.1	REVISION 01

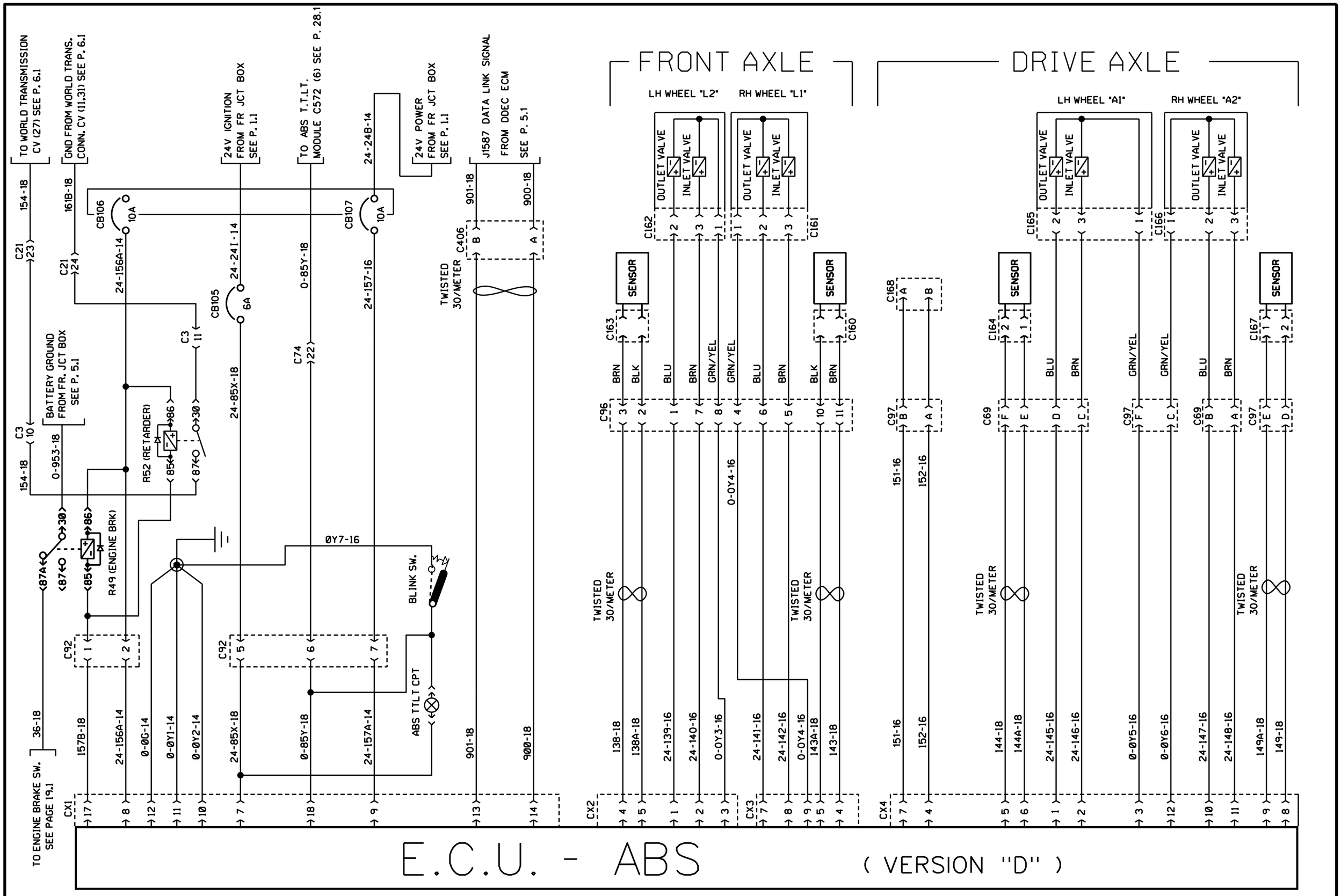

PREVOST	WIRING DIAGRAM	NO: D060902	PAGE: 21.1	REVISION 02

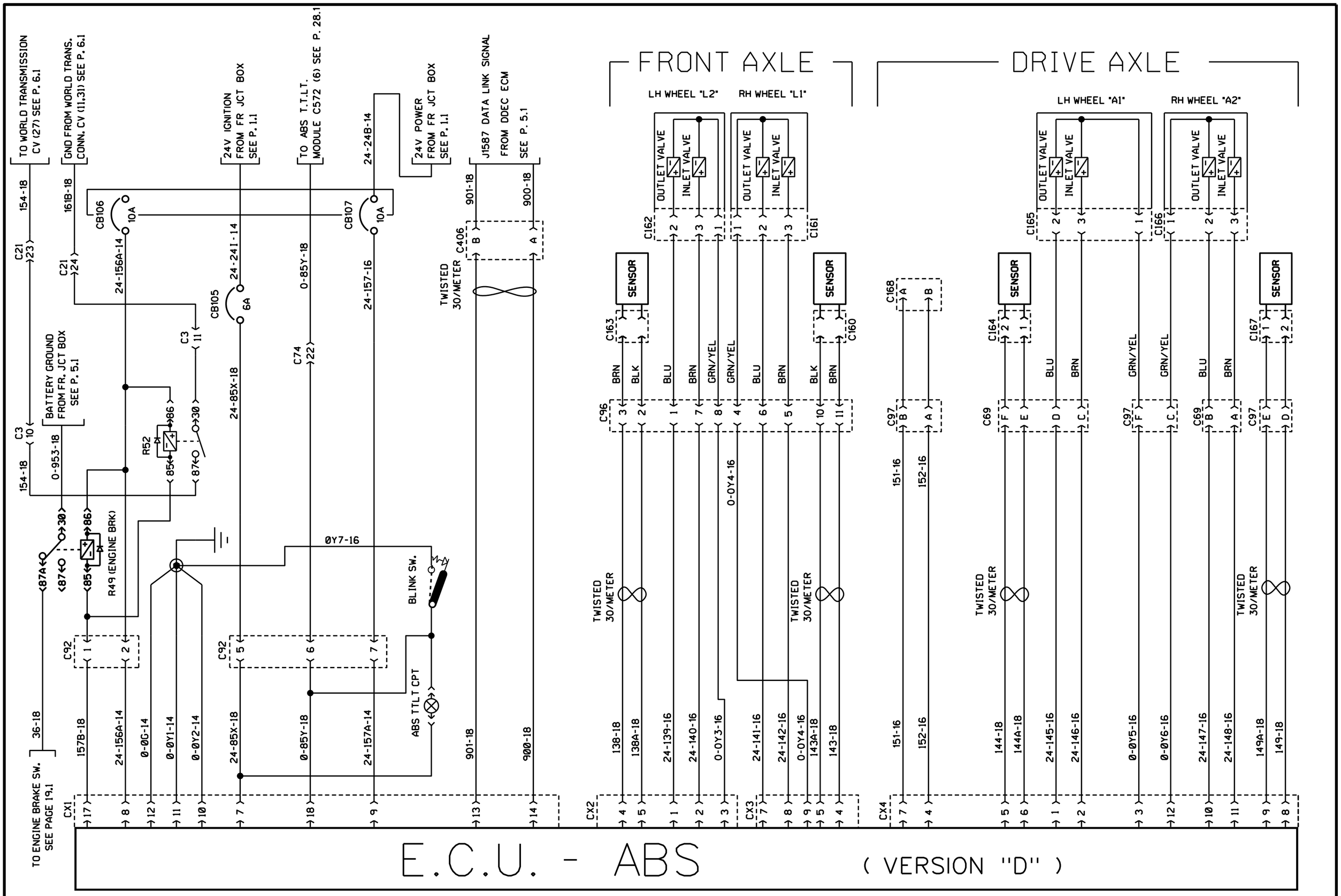
FRONT AXLE
DRIVE AXLE
LH WHEEL "L2"
RH WHEEL "L1"
LH WHEEL "A1"
RH WHEEL "A2"
OUTLET VALVE
INLET VALVE
SENSOR
TO WORLD TRANSMISSION CV (27) SEE P. 6.1
GND FROM WORLD TRANS. CONN. CV (11,31) SEE P. 6.1
24V IGNITION FROM FR JCT BOX SEE P. 1.1
TO ABS T.T.L.T. MODULE C572 (6) SEE P. 28.1
24V POWER FROM FR JCT BOX SEE P. 1.1
J1587 DATA LINK SIGNAL FROM DDEC ECM SEE P. 5.1
BATTERY GROUND FROM FR. JCT BOX SEE P. 5.1
TWISTED 30/METER
R52
R49 (ENGINE BRK)
BLINK SW.
ABS TILT CPT
TO ENGINE BRAKE SW. SEE PAGE 19.1
CB105
CB106
CB107
CX1
CX2
CX3
CX4
E.C.U. - ABS
(VERSION "D")

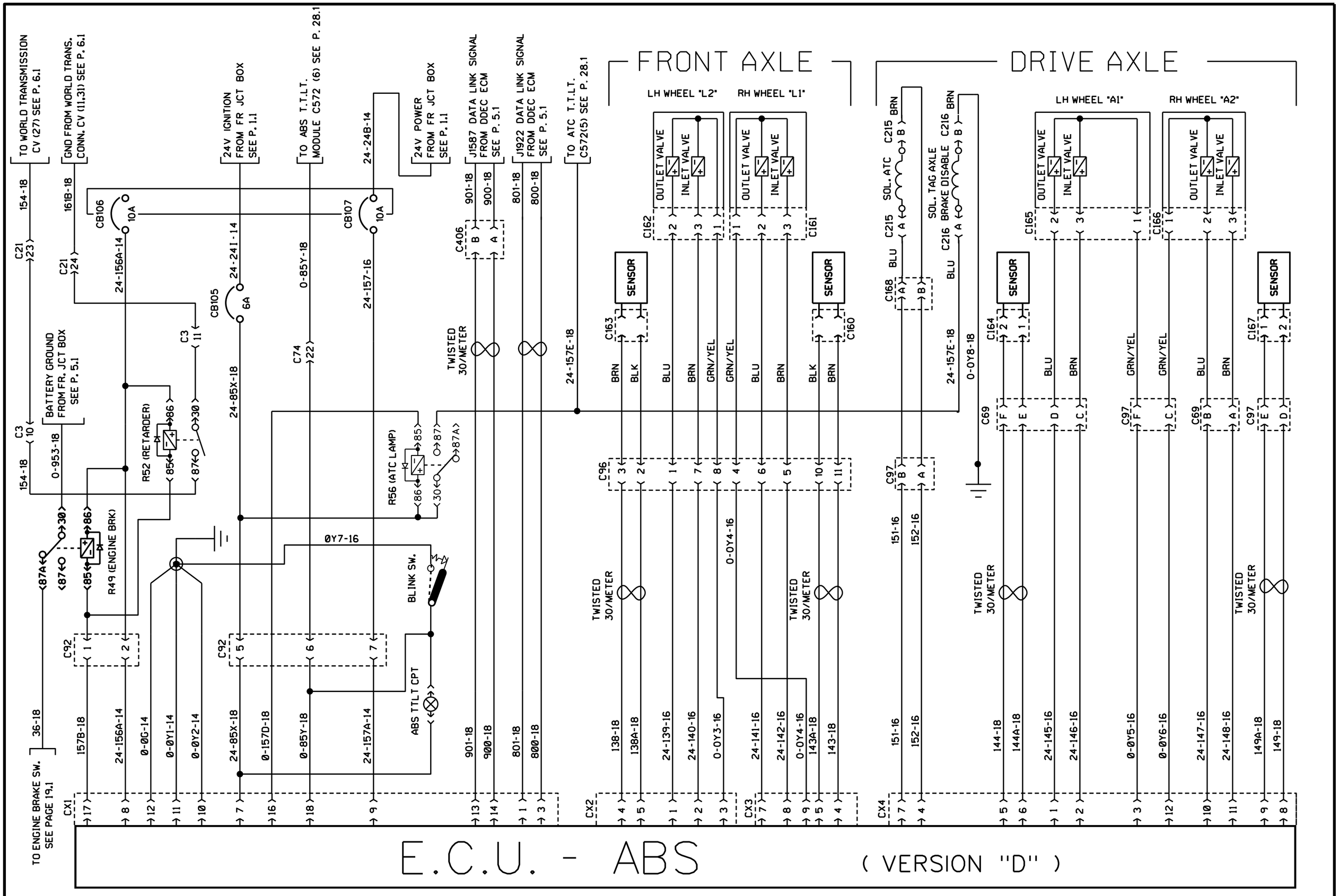

PREVOST	WIRING DIAGRAM	NO: D060902	PAGE: 22.1 SP1	REVISION 00

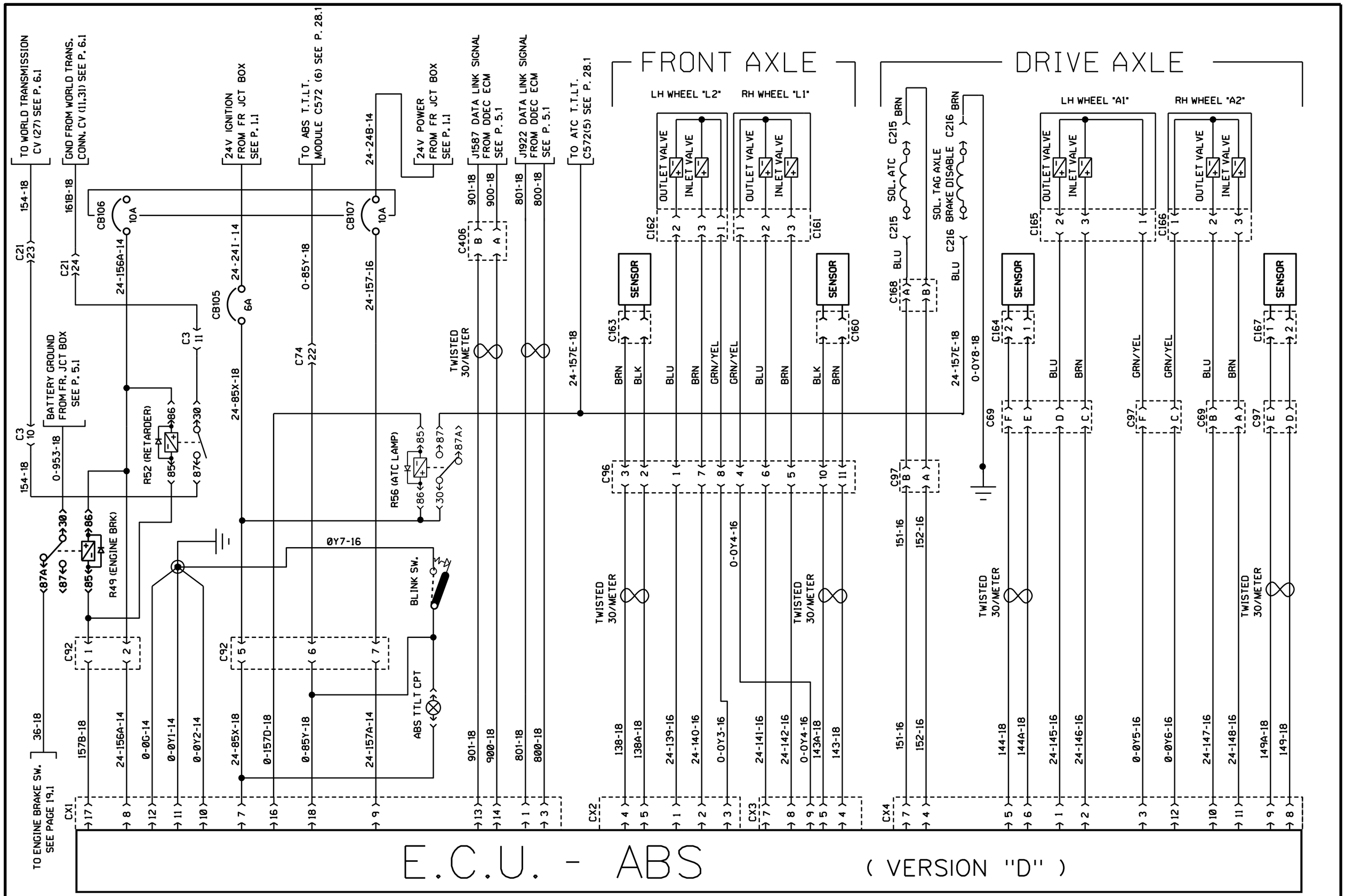

PREVOST	WIRING DIAGRAM	NO: D060902	PAGE: 21.1 SP1	REVISION 08

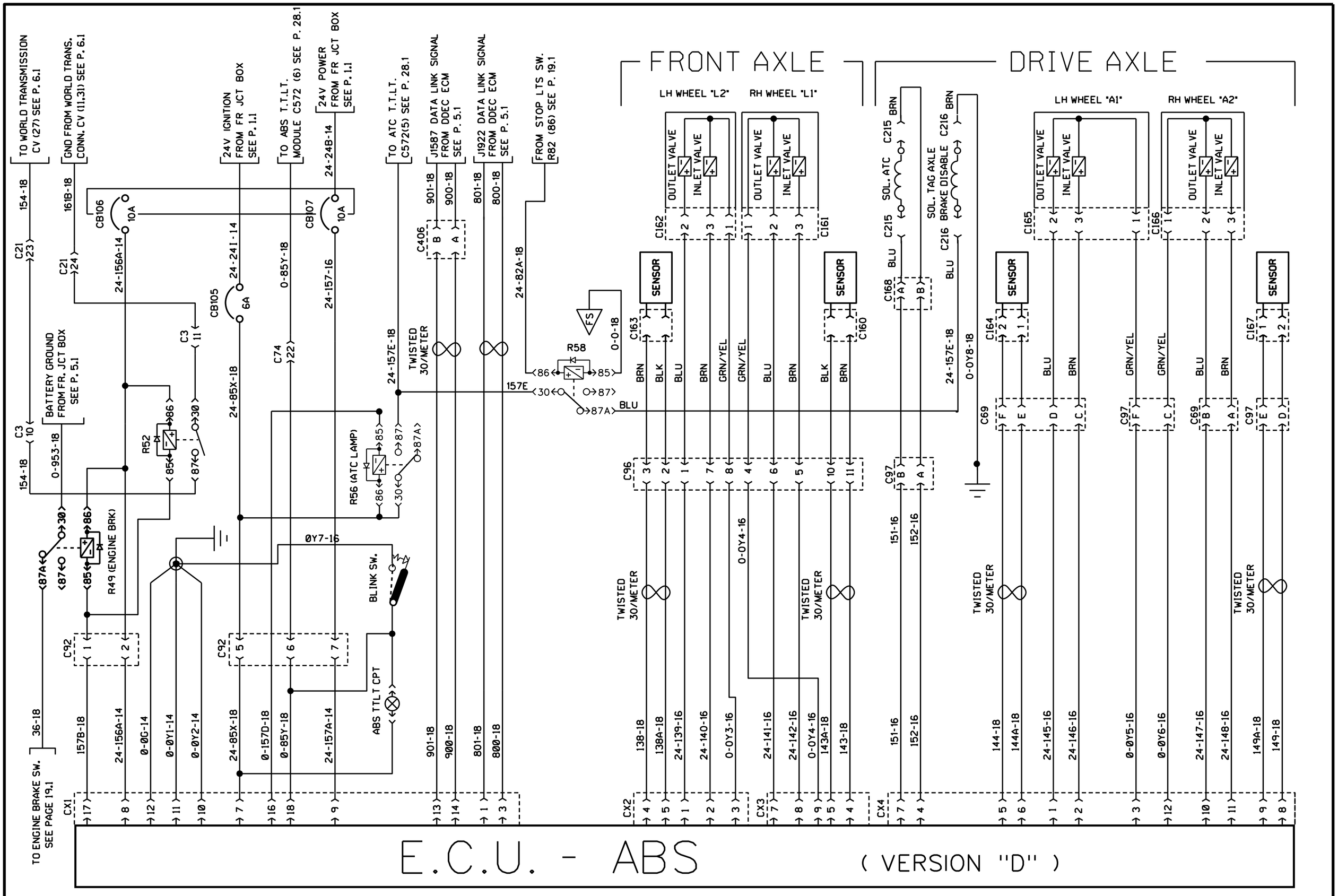

PREVOST	WIRING DIAGRAM	NO: D060902	PAGE: 21.1 SP1	REVISION 25

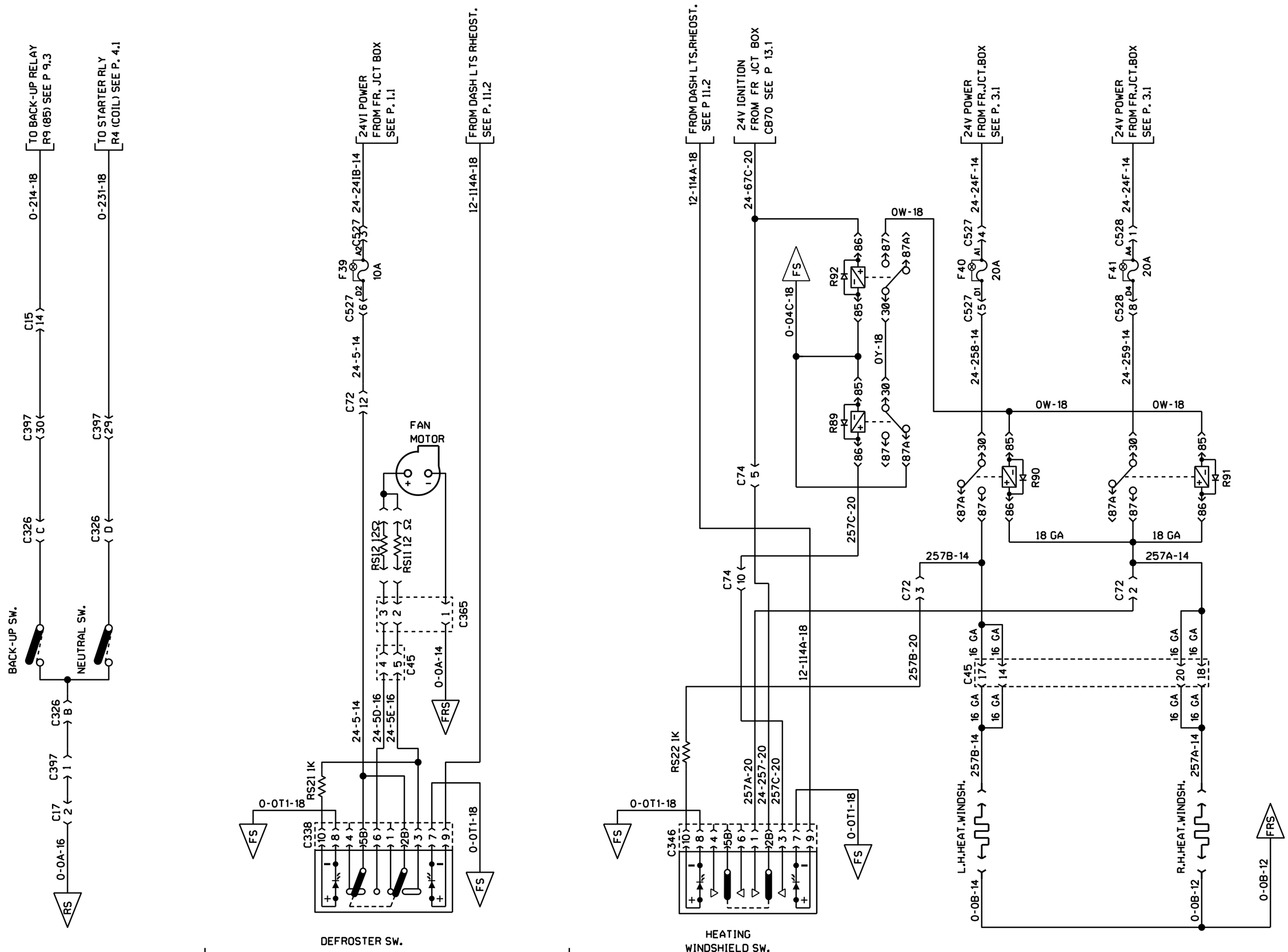

MANUAL TRANSMISSION | UPPER WINDSHIELD DEFROST | UPPER HEATED WINDSHIELD

PREVOST	WIRING DIAGRAM	NO: D060902	PAGE: 22.1	REVISION 00

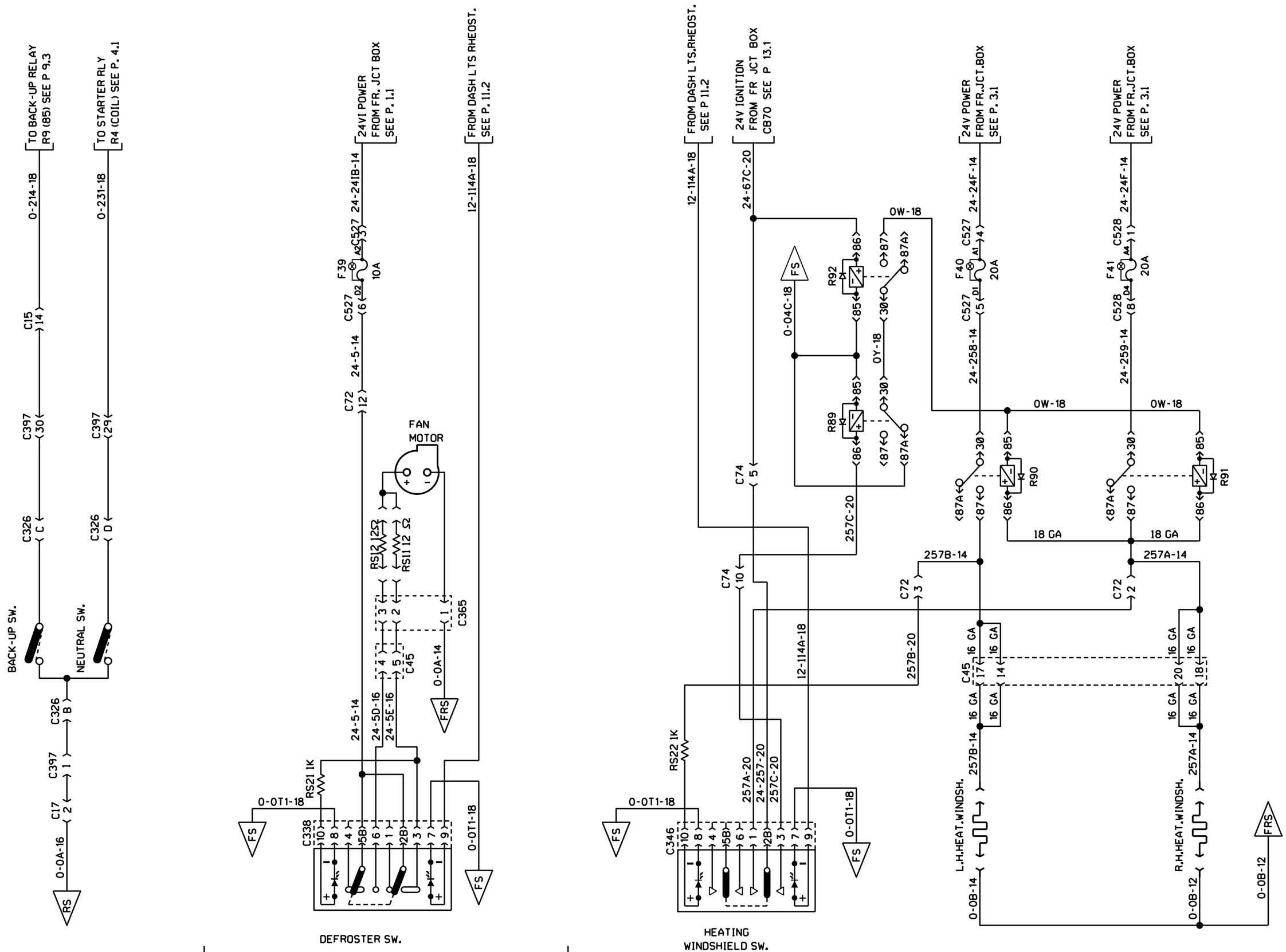

MANUAL TRANSMISSION | UPPER WINDSHIELD DEFROST | UPPER HEATED WINDSHIELD

PREVOST	WIRING DIAGRAM	NO: D060902	PAGE: 22.1	REVISION 01

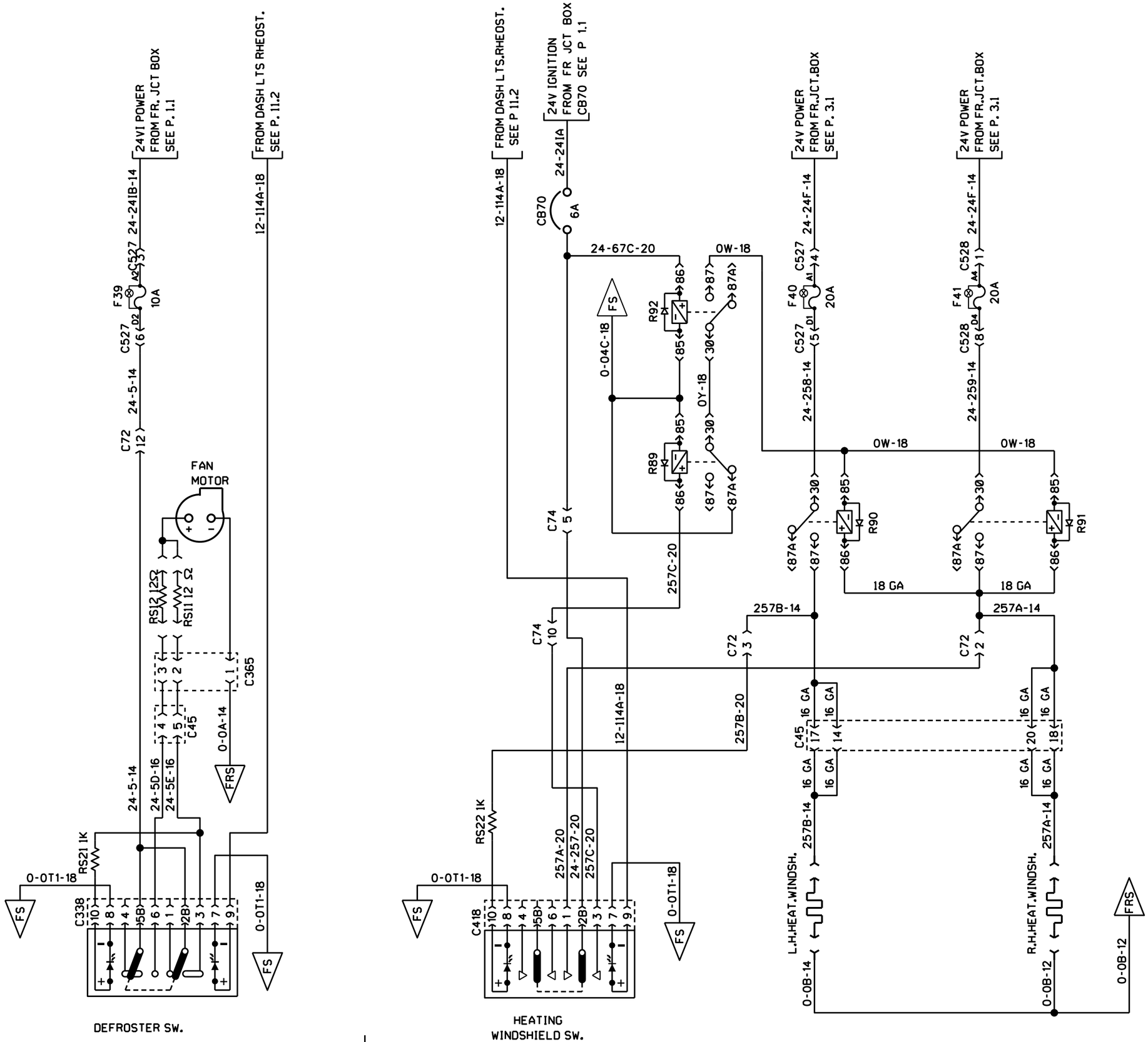

PREVOST	WIRING DIAGRAM	NO: D060902	PAGE: 22.1	REVISION 08

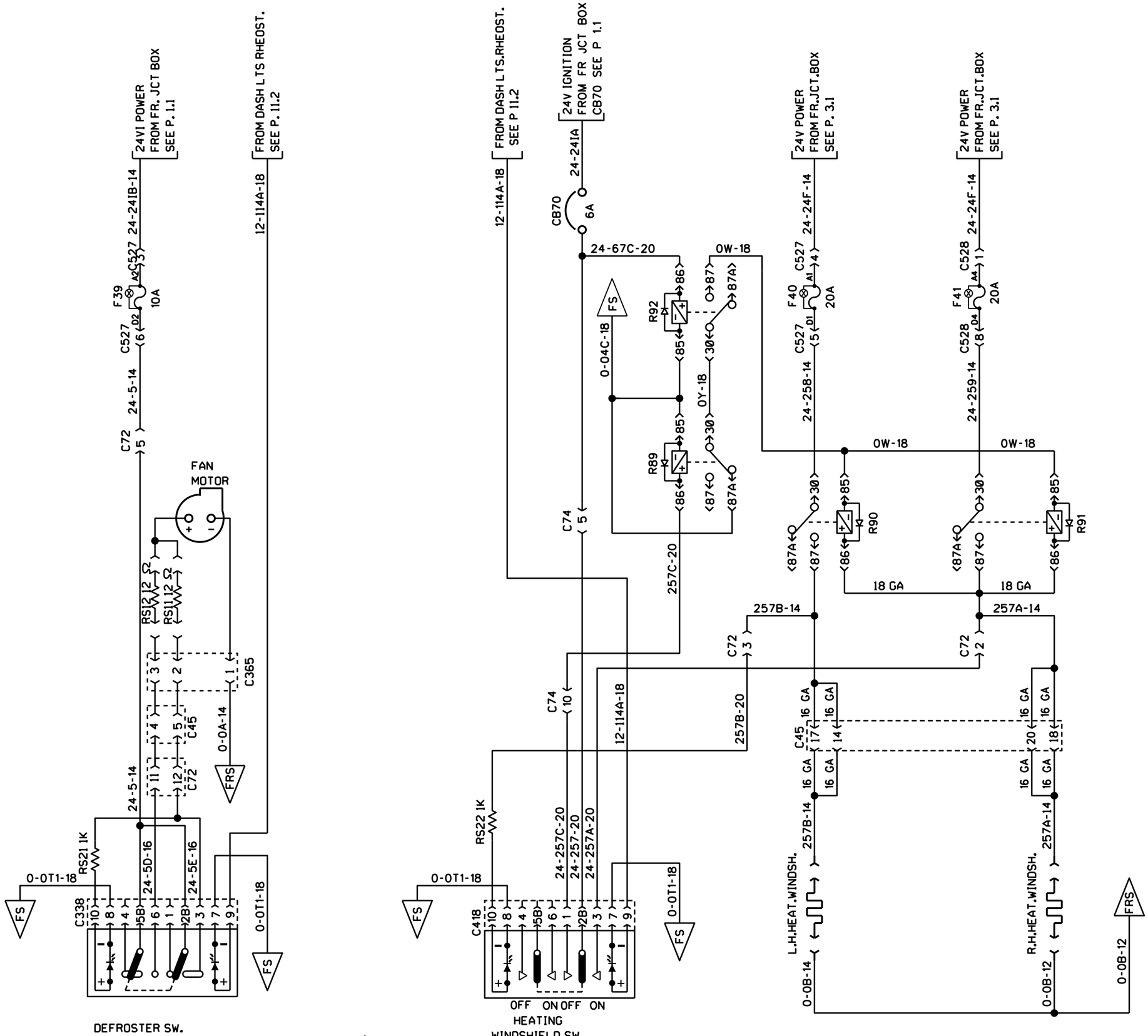

UPPER WINDSHIELD DEFROST

UPPER HEATED WINDSHIELD

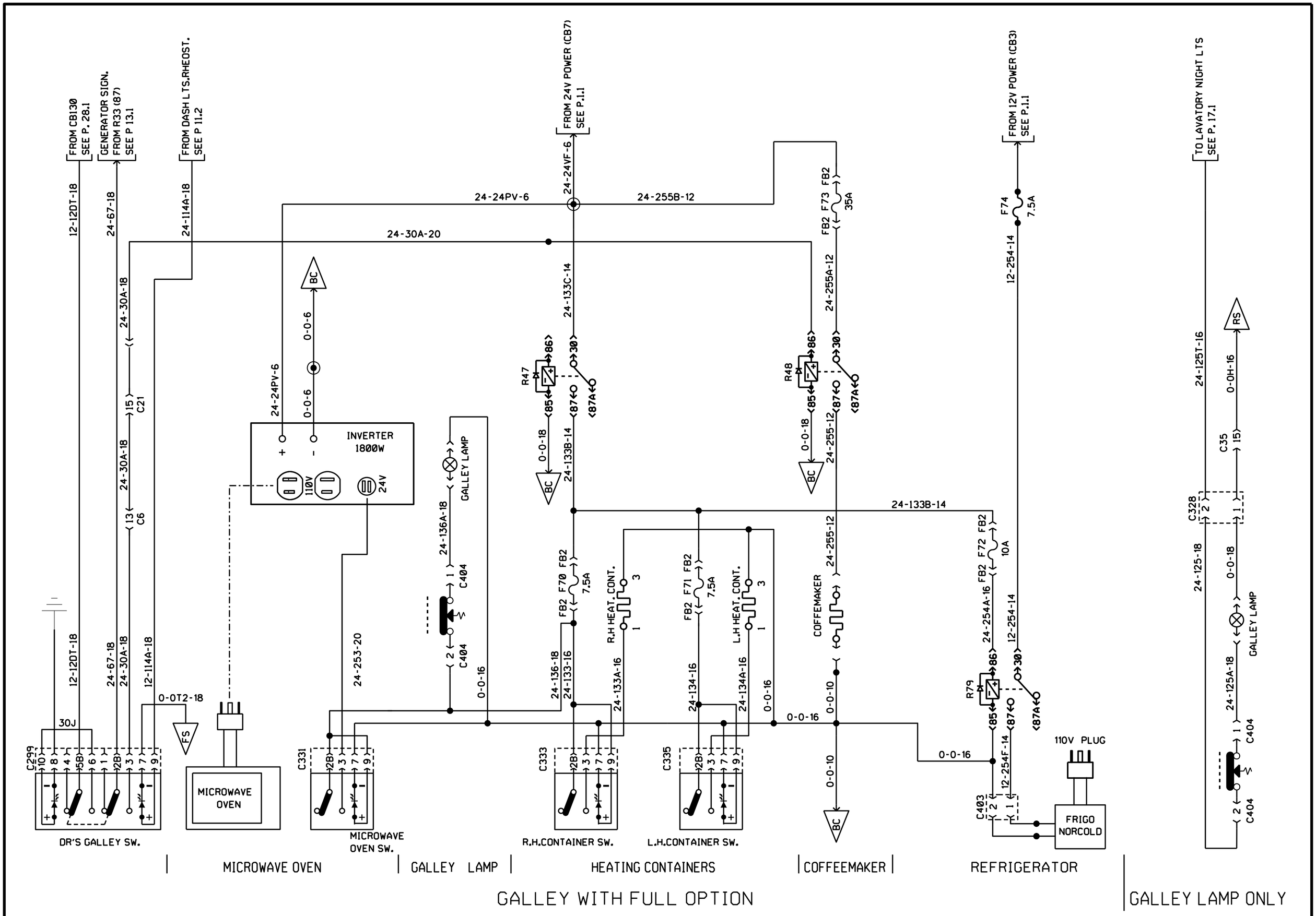

PREVOST	WIRING DIAGRAM	NO: D060902	PAGE: 23.1	REVISION 00

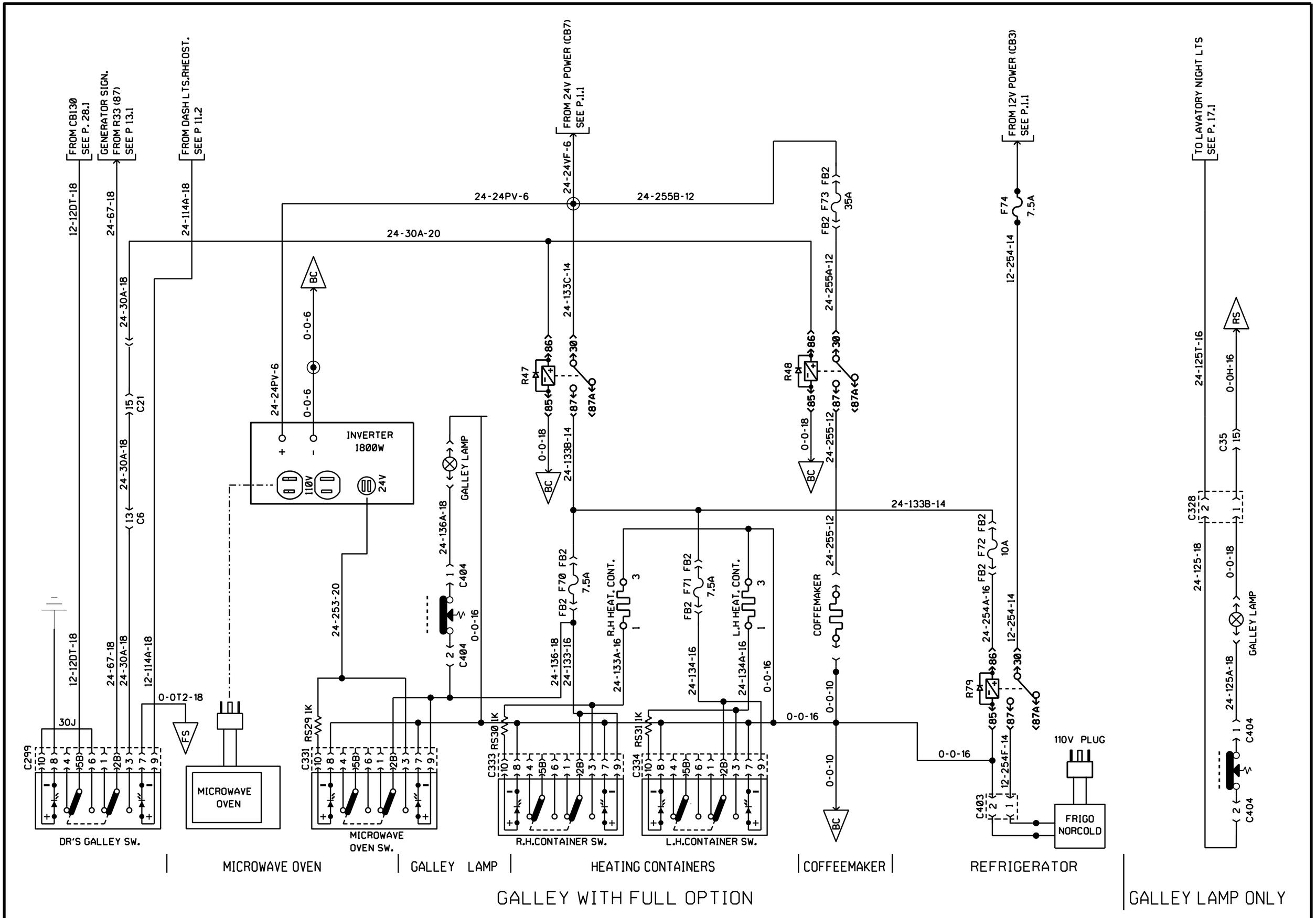

PREVOST	WIRING DIAGRAM	NO: D060902	PAGE: 23.1	REVISION 05

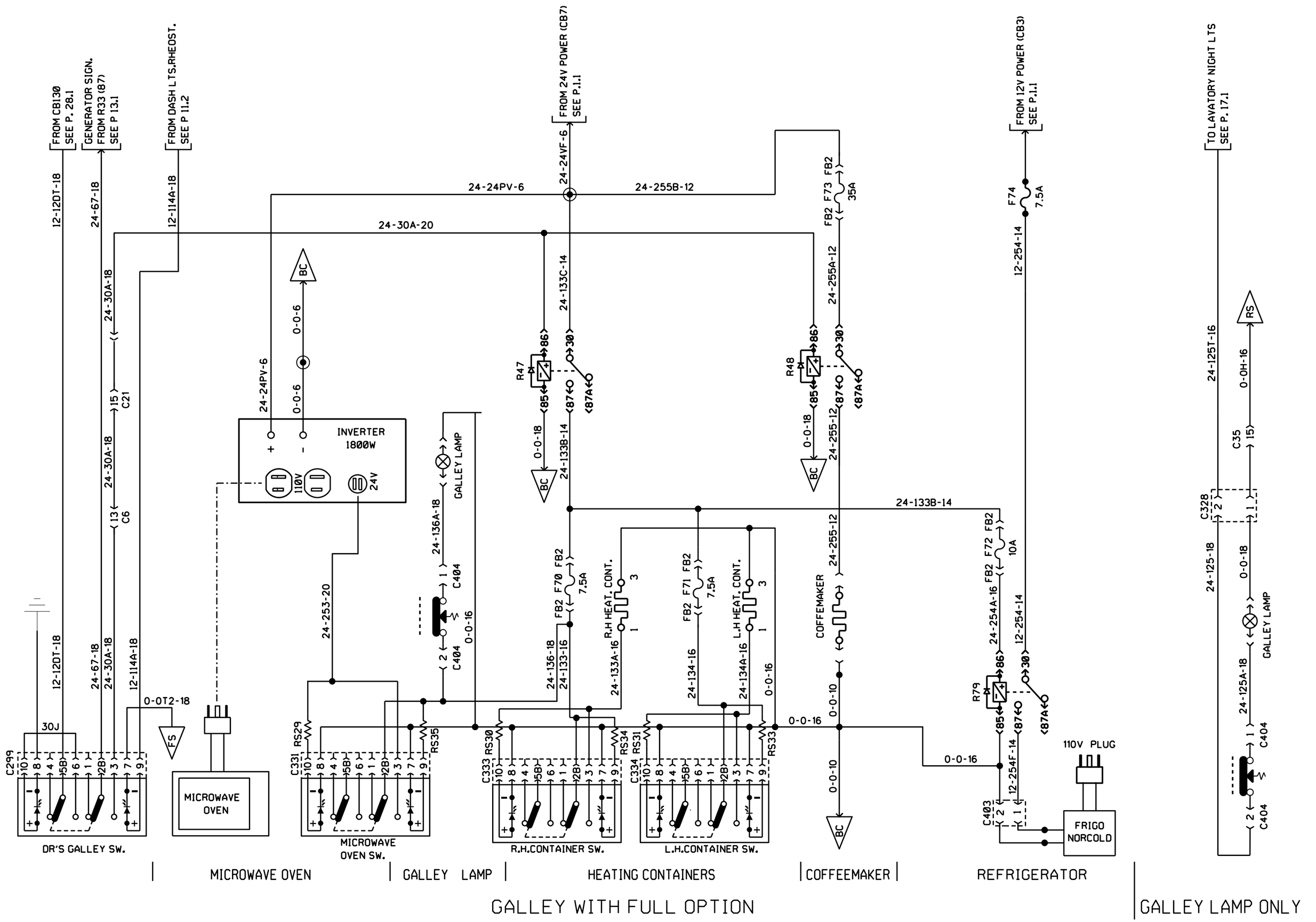

PREVOST	WIRING DIAGRAM	NO: D060902	PAGE: 23.1	REVISION 12

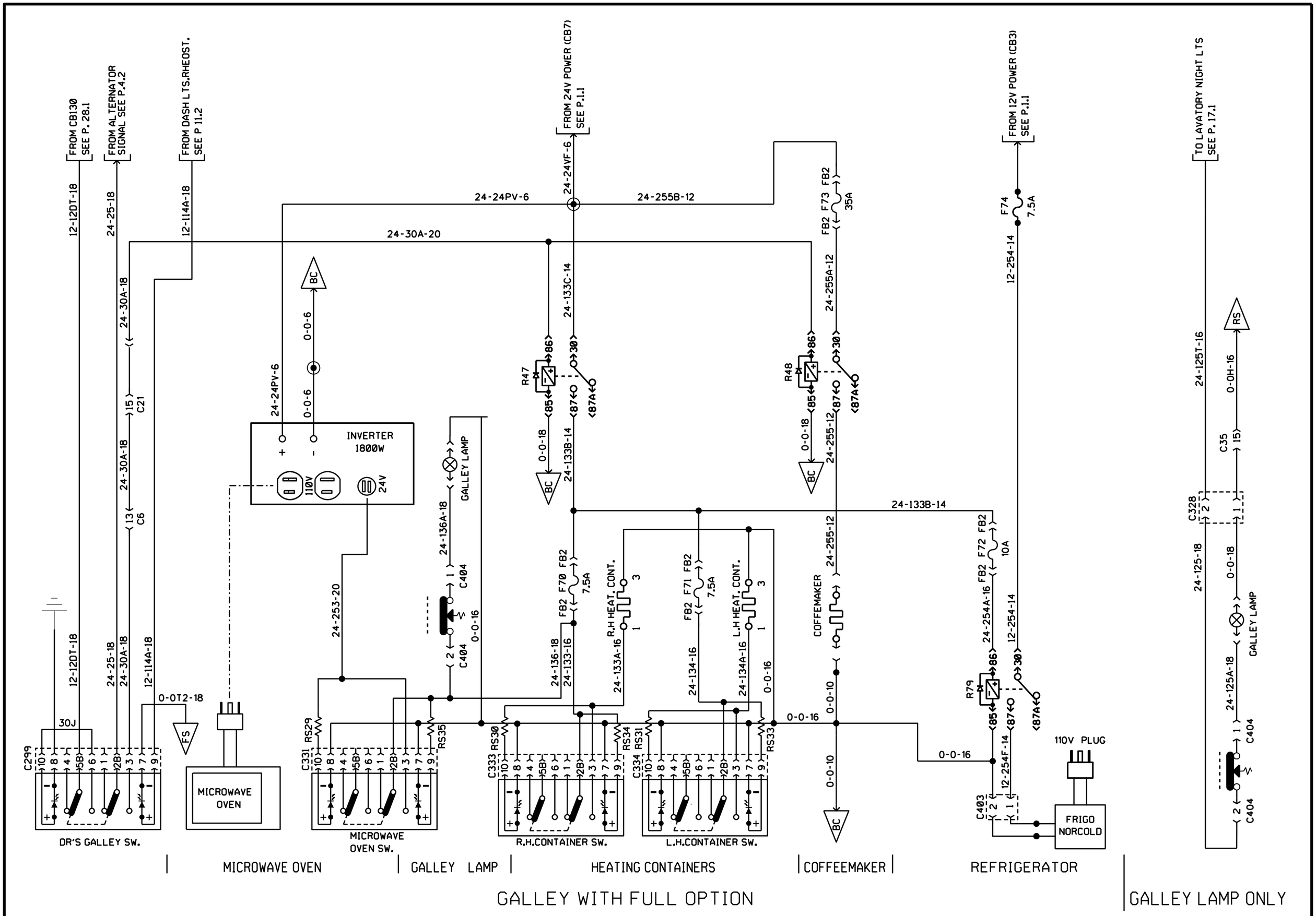

PREVOST	WIRING DIAGRAM	NO: D060902	PAGE: 23.1	REVISION 16

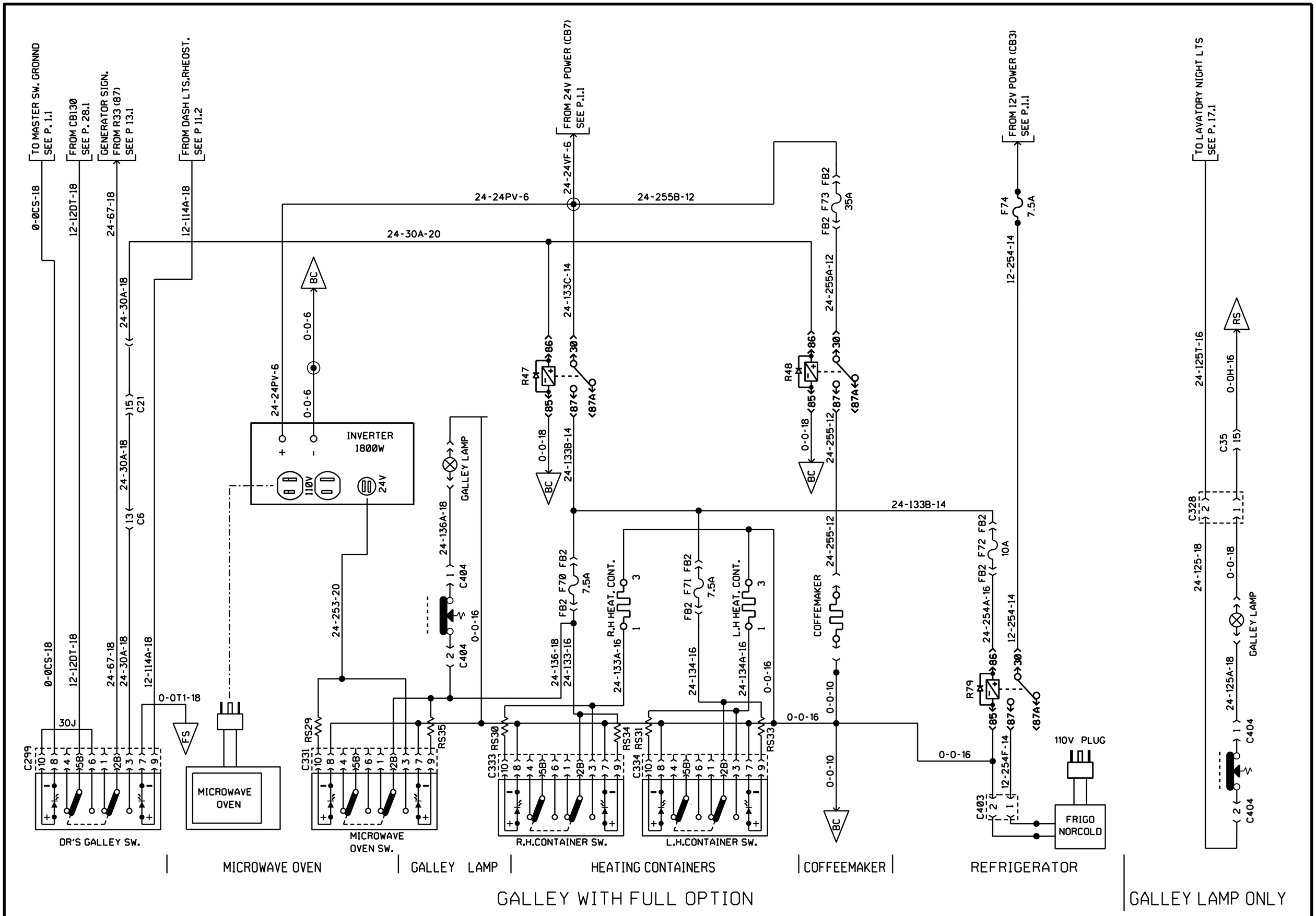

PREVOST	WIRING DIAGRAM	NO: D060902	PAGE: 23.1	REVISION 17

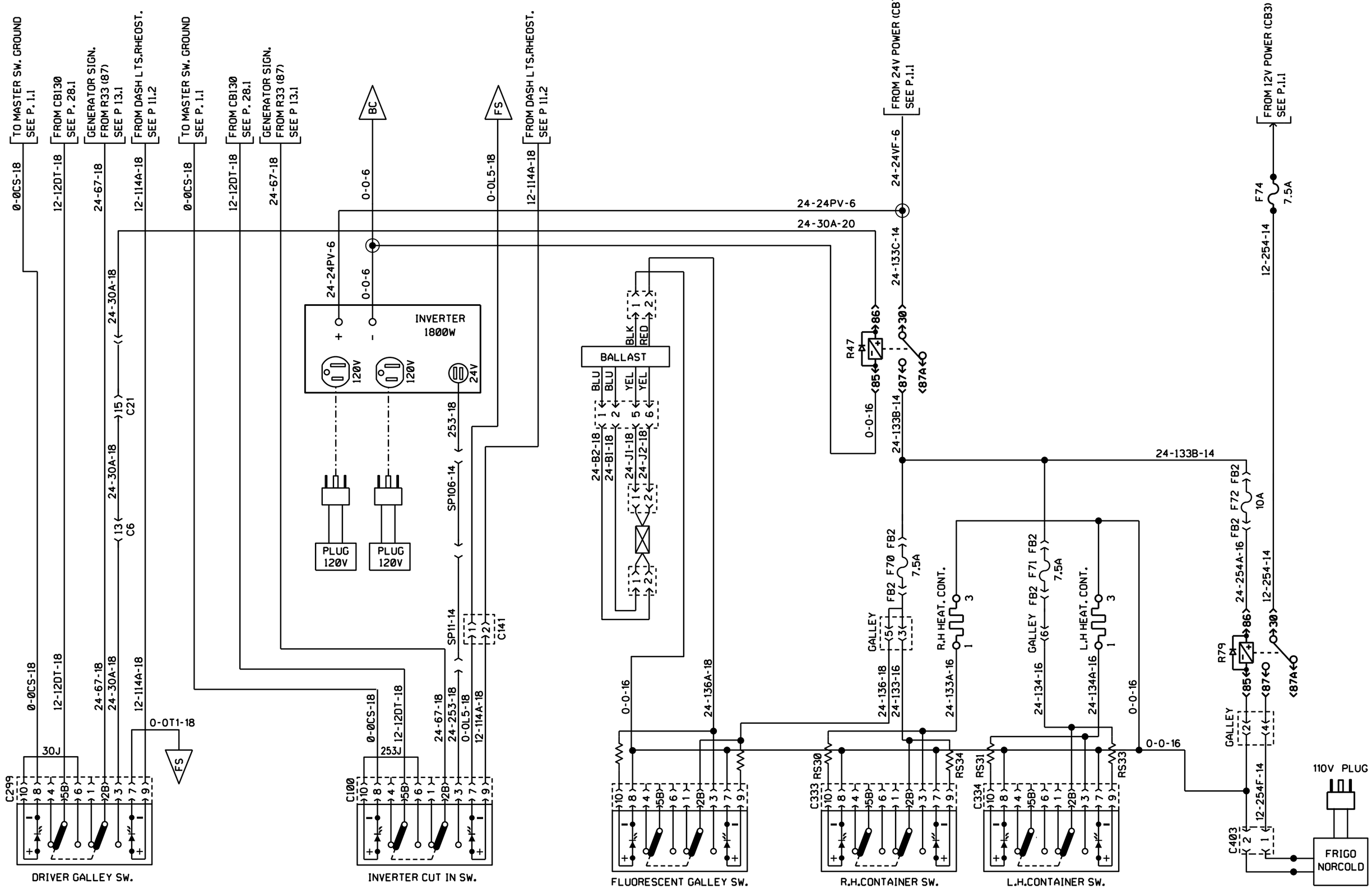

X2868

PREVOST	WIRING DIAGRAM	NO: D060902	PAGE: 23.1sp1	REVISION 00

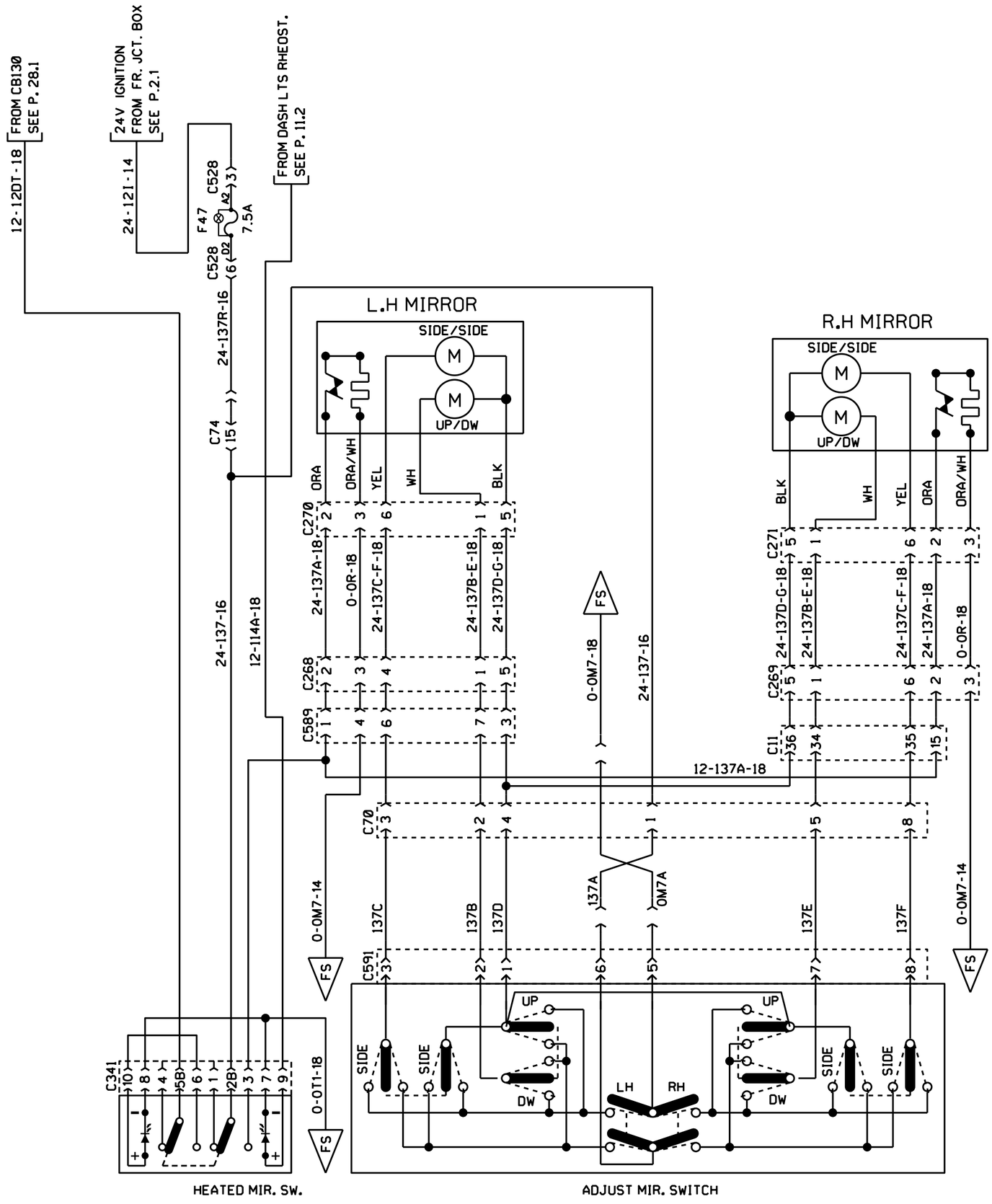

REAR VIEW MIRROR SPARTAN - 1 ADJUSTMENT SW. & 1 HEATED SW.

PREVOST	WIRING DIAGRAM	NO: D060902	PAGE: 24.1	REVISION 00

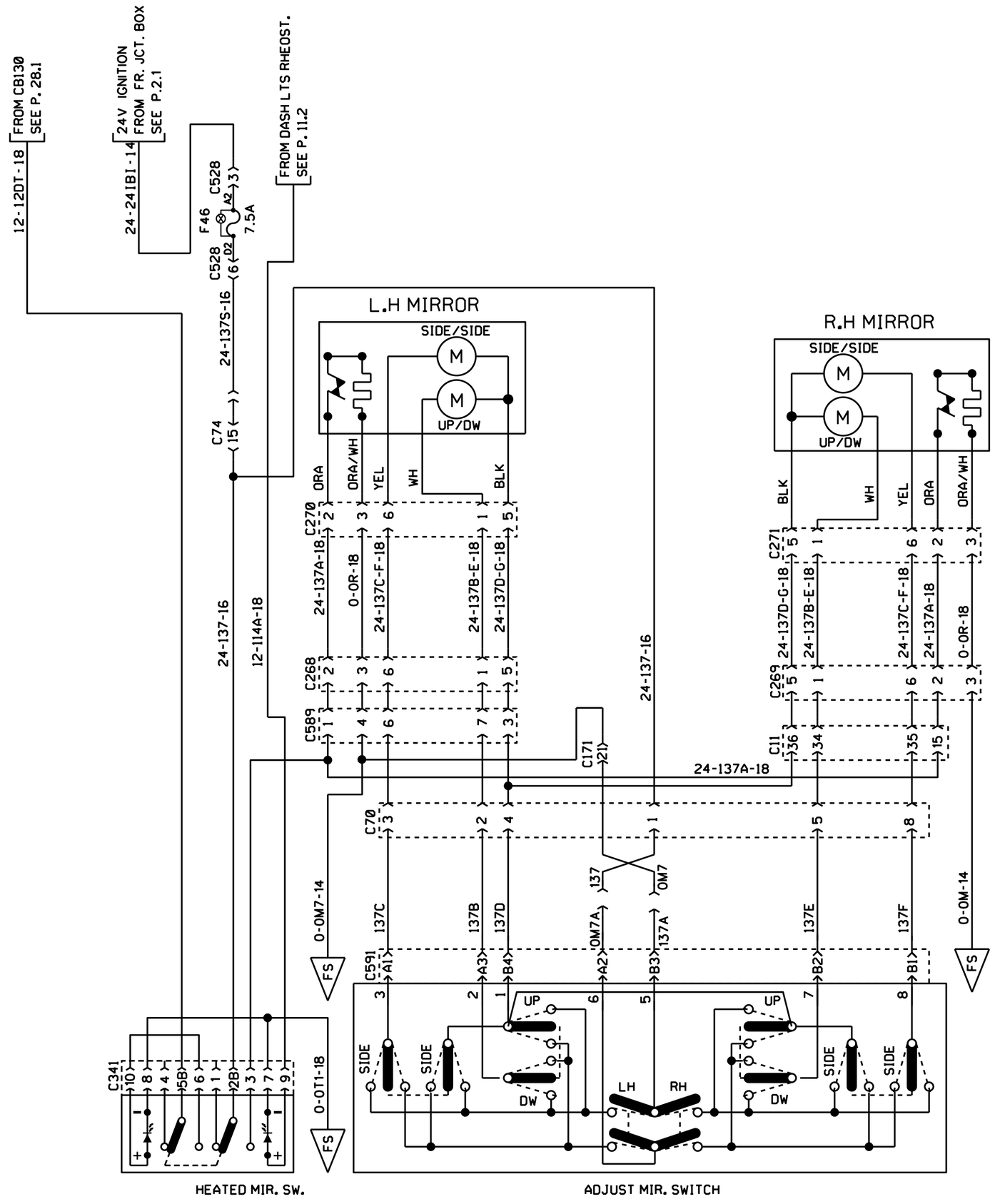

REAR VIEW MIRROR SPARTAN - 1 ADJUSTMENT SW. & 1 HEATED SW.

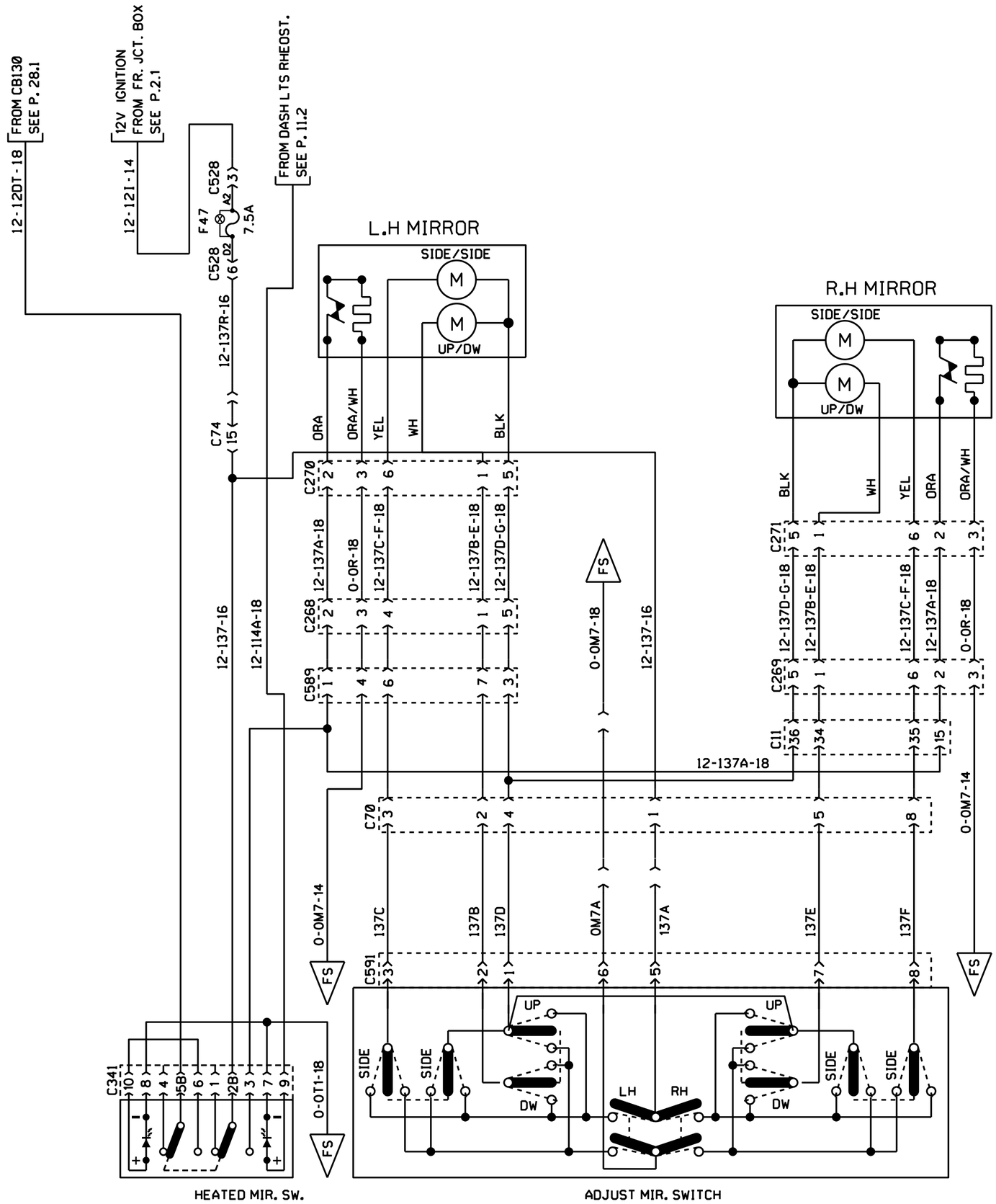

REAR VIEW MIRROR RAMCO FLAT - 1 ADJUSTMENT SW. & 1 HEATED SW.

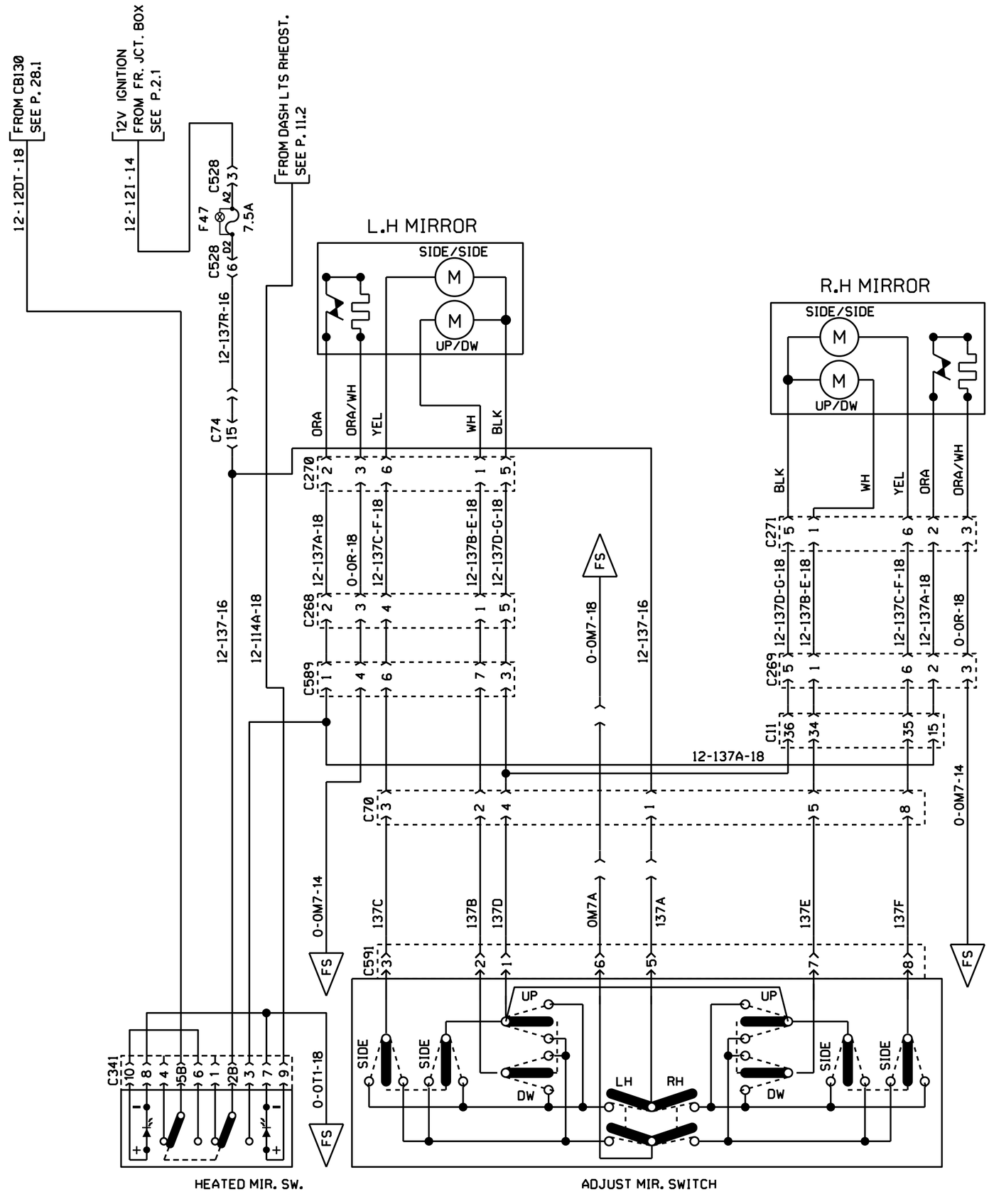

REAR VIEW MIRROR RAMCO FLAT - 1 ADJUSTMENT SW. & 1 HEATED SW.

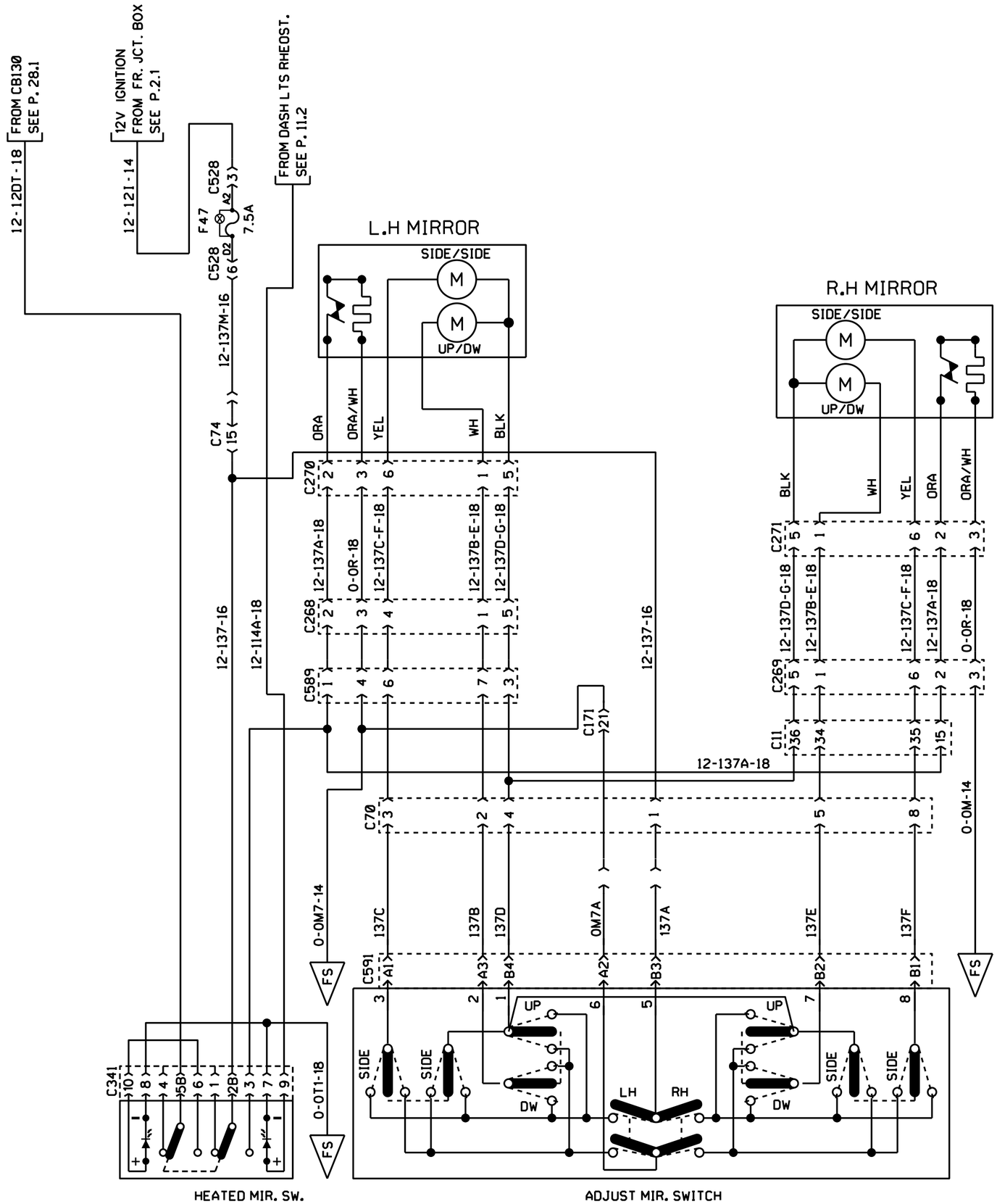

REAR VIEW MIRROR RAMCO FLAT - 1 ADJUSTMENT SW. & 1 HEATED SW.

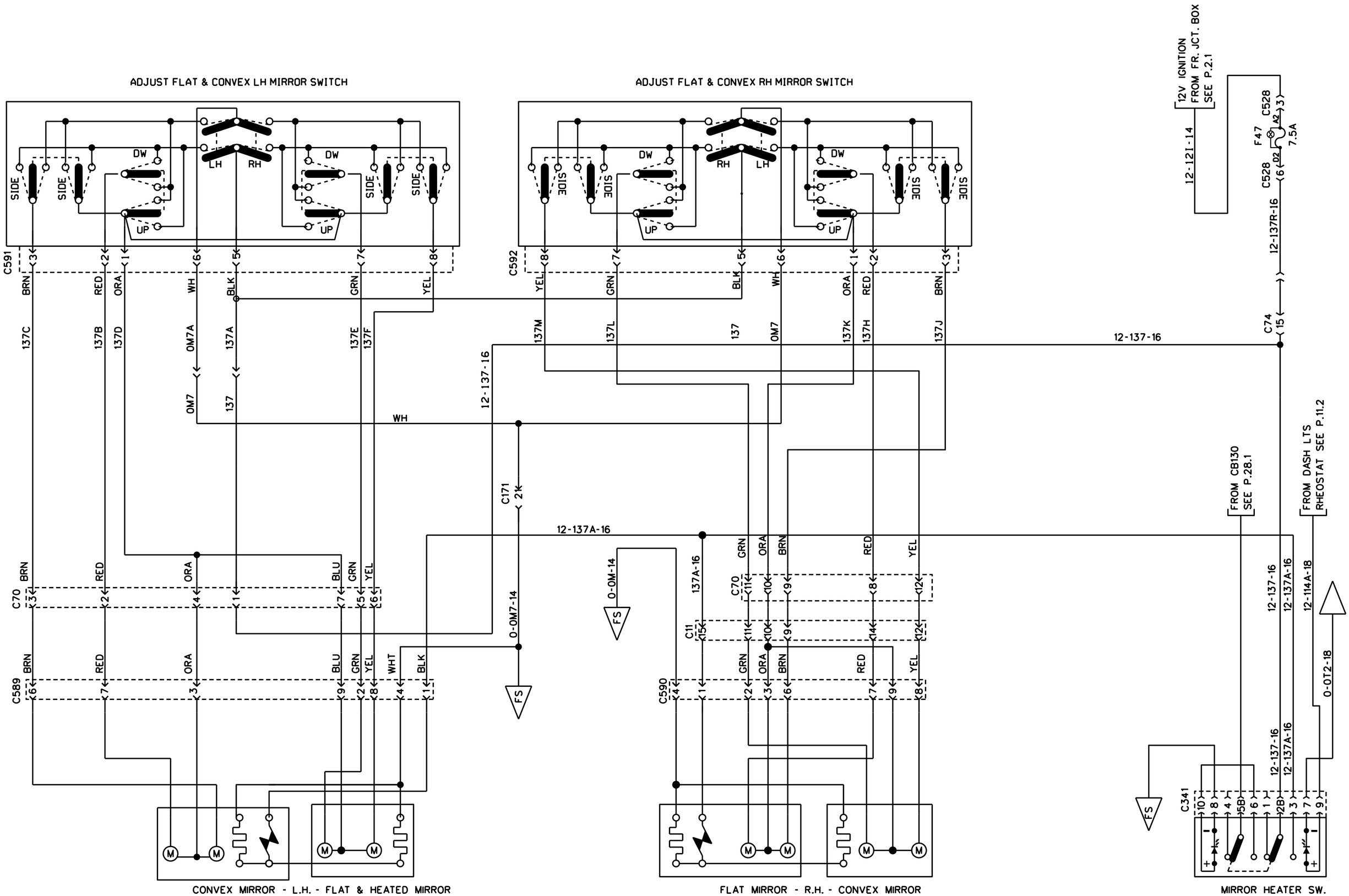

REAR VIEW MIRROR RAMCO FLAT & CONVEX - 2 ADJUSTMENT SW. & 1 HEATED SW.

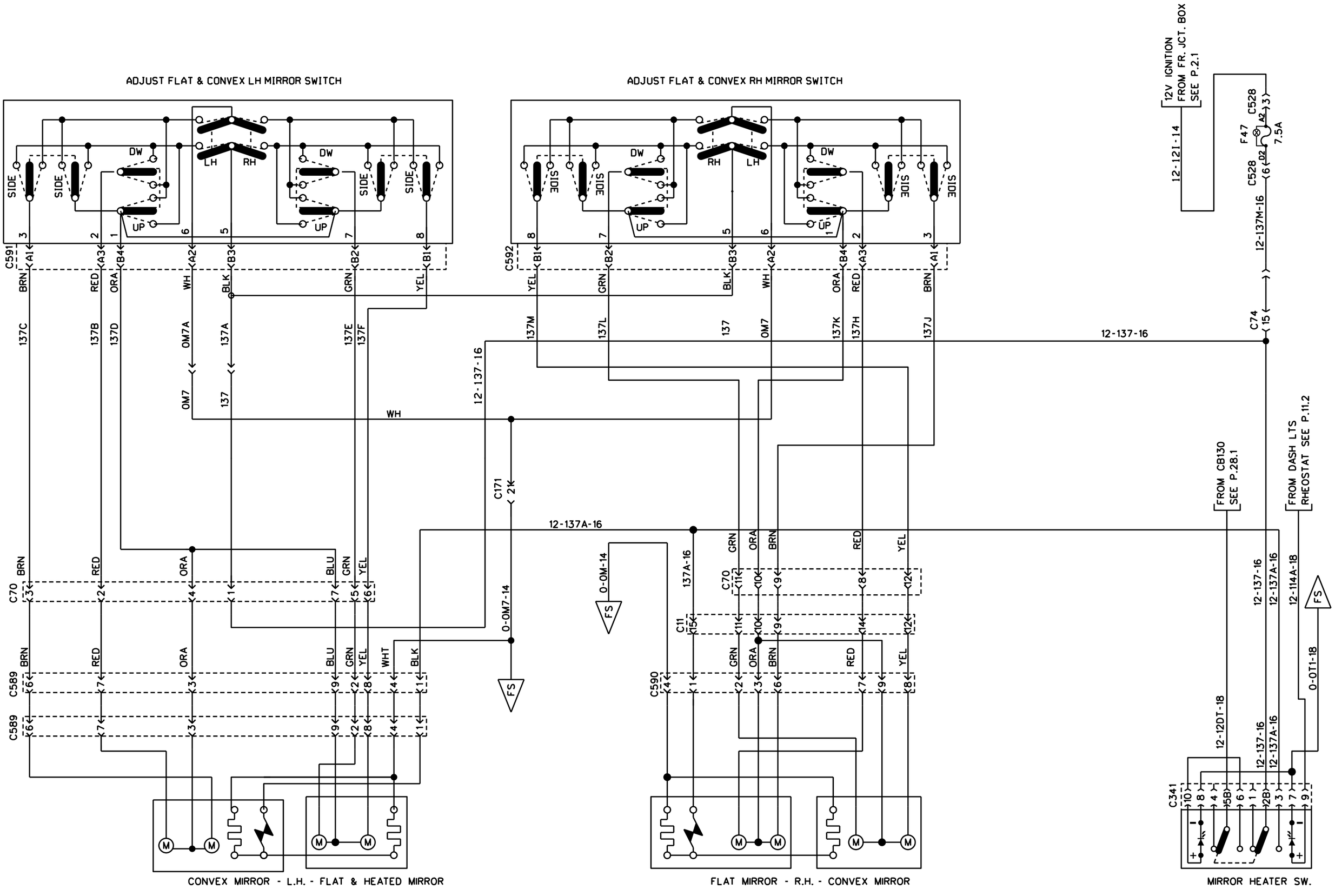

REAR VIEW MIRROR RAMCO FLAT & CONVEX - 2 ADJUSTMENT SW. & 1 HEATED SW.

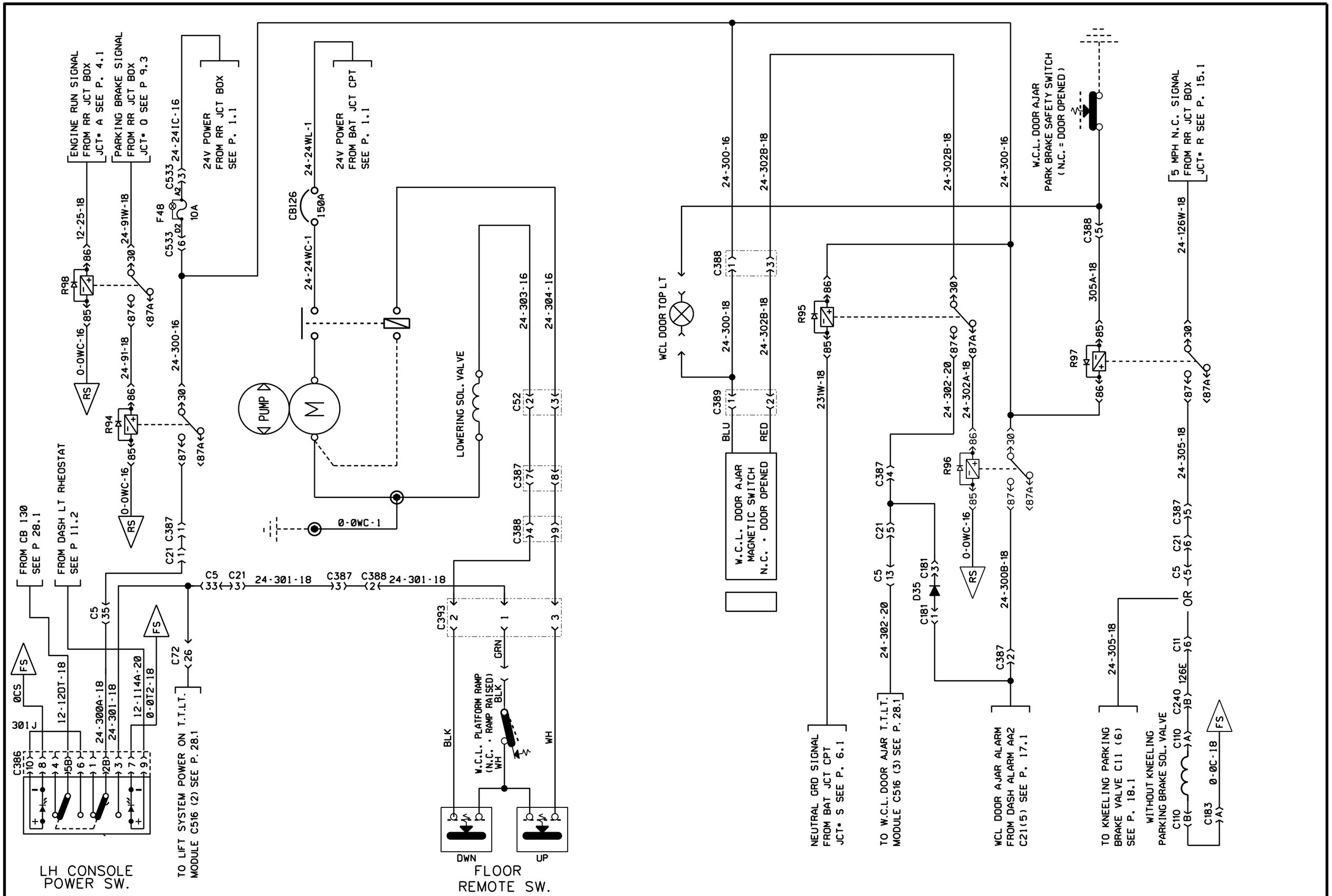

W.C.L. SYSTEM STEWART & STEVENSON

PREVOST	WIRING DIAGRAM	NO: D060902	PAGE: 25.1	REVISION 00

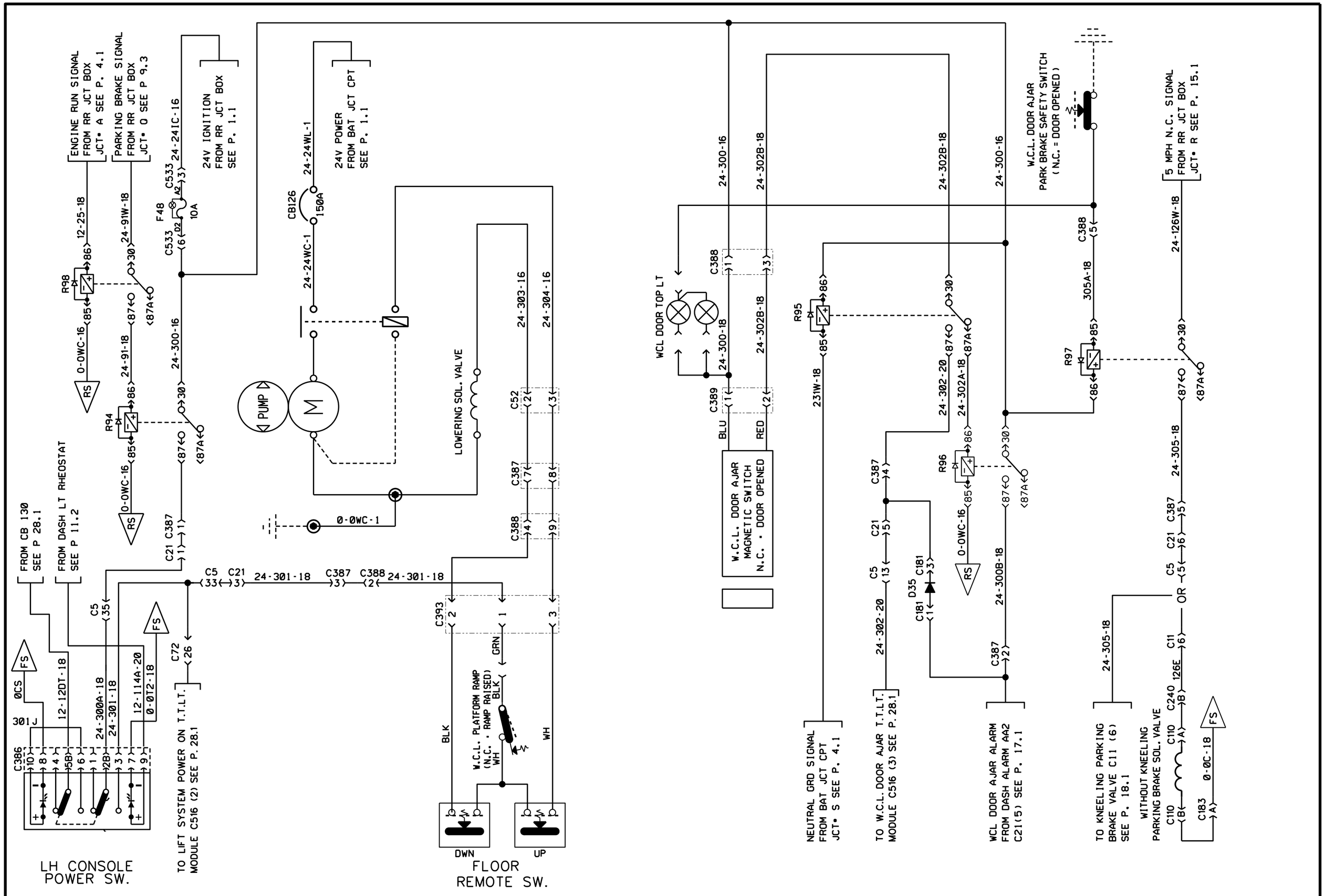

W.C.L. SYSTEM STEWART & STEVENSON

PREVOST	WIRING DIAGRAM	NO: D060902	PAGE: 25.1	REVISION 08

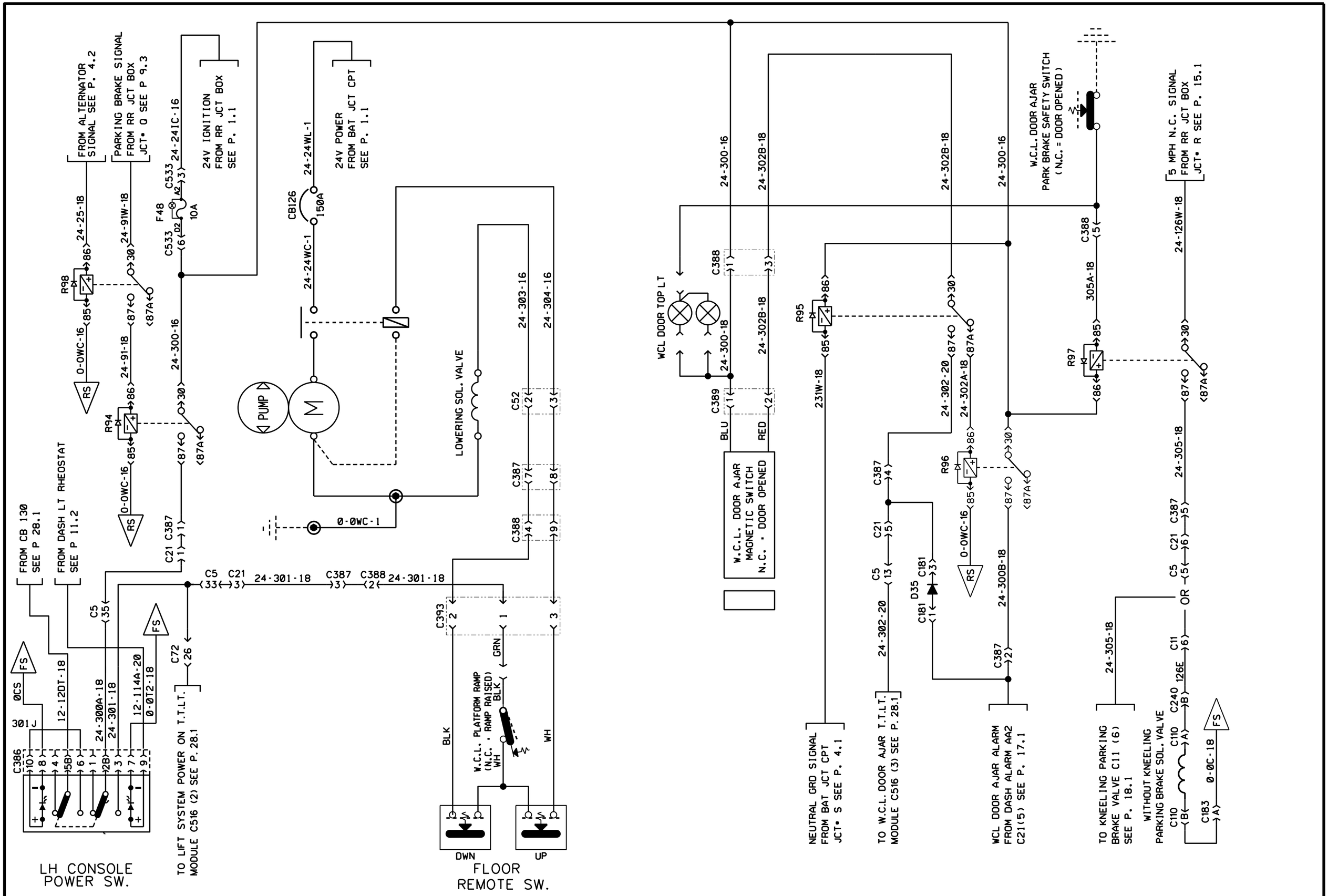

W.C.L. SYSTEM STEWART & STEVENSON

PREVOST	WIRING DIAGRAM	NO: D060902	PAGE: 25.1	REVISION 16

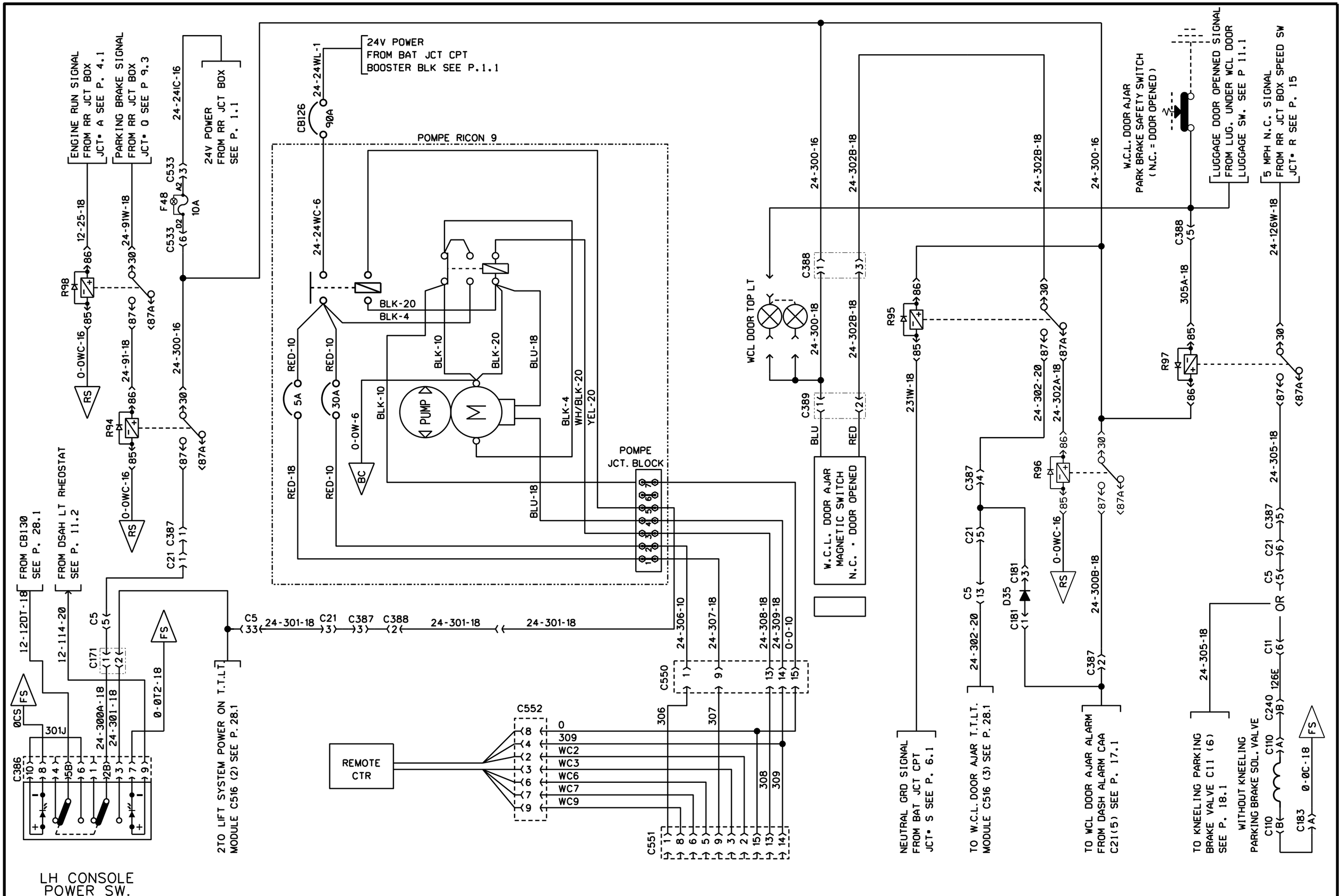

W.C.L. SYSTEM RICON 9

PREVOST	WIRING DIAGRAM	NO: D060902	PAGE: 25.2	REVISION 00

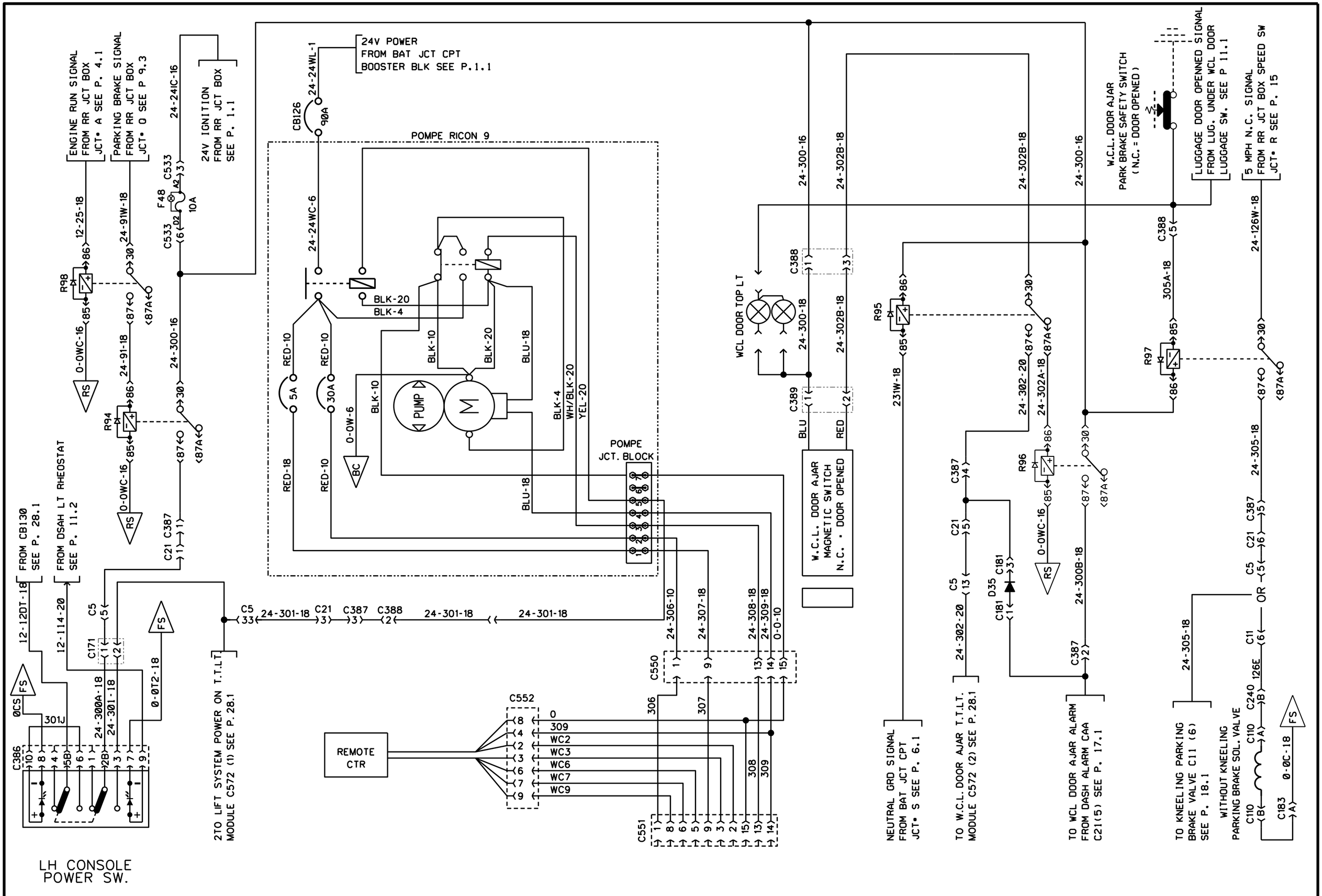

W.C.L. SYSTEM RICON 9

PREVOST	WIRING DIAGRAM	NO: D060902	PAGE: 25.2	REVISION 08

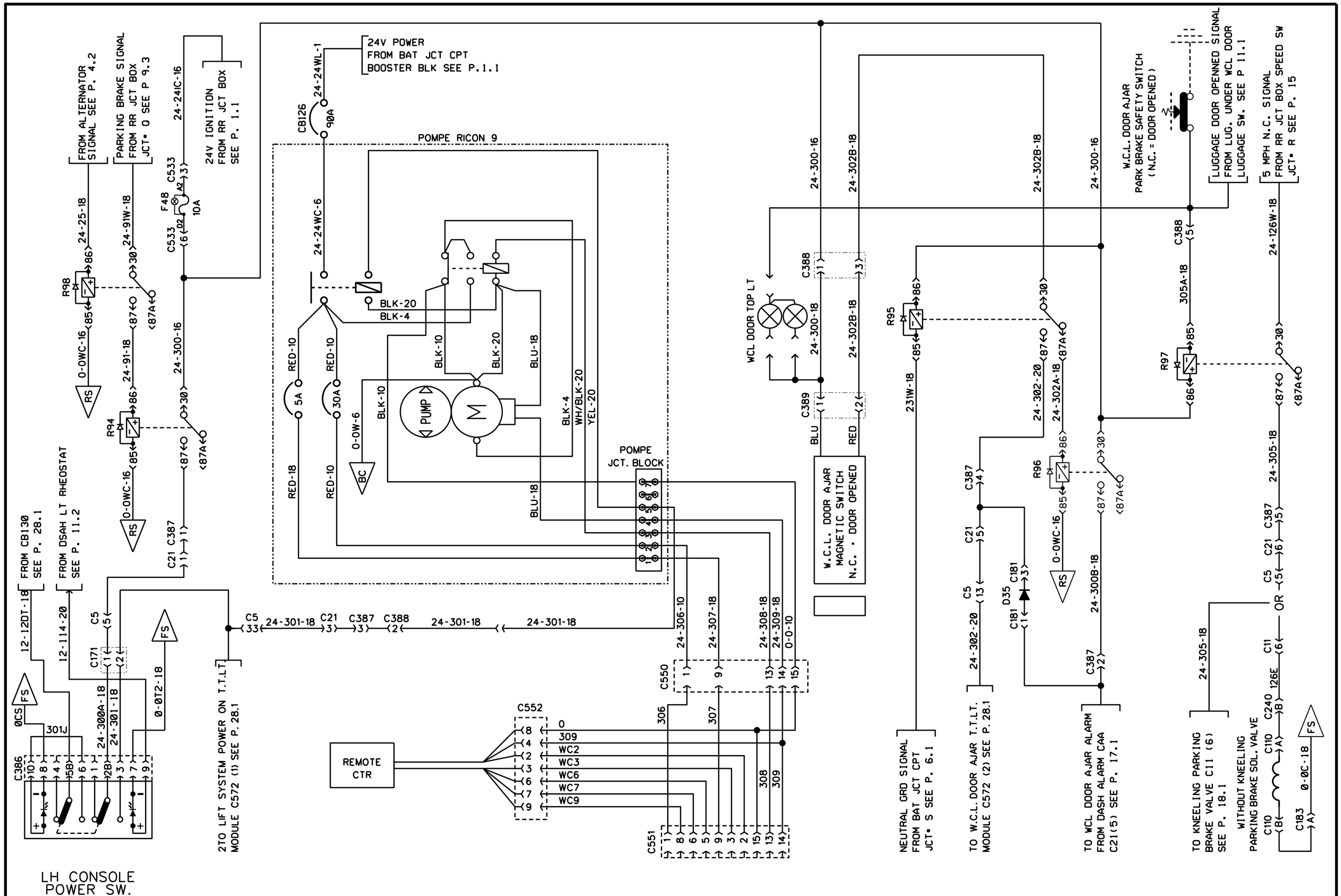

W.C.L. SYSTEM RICON 9

PREVOST	WIRING DIAGRAM	NO: D060902	PAGE: 25.2	REVISION 16

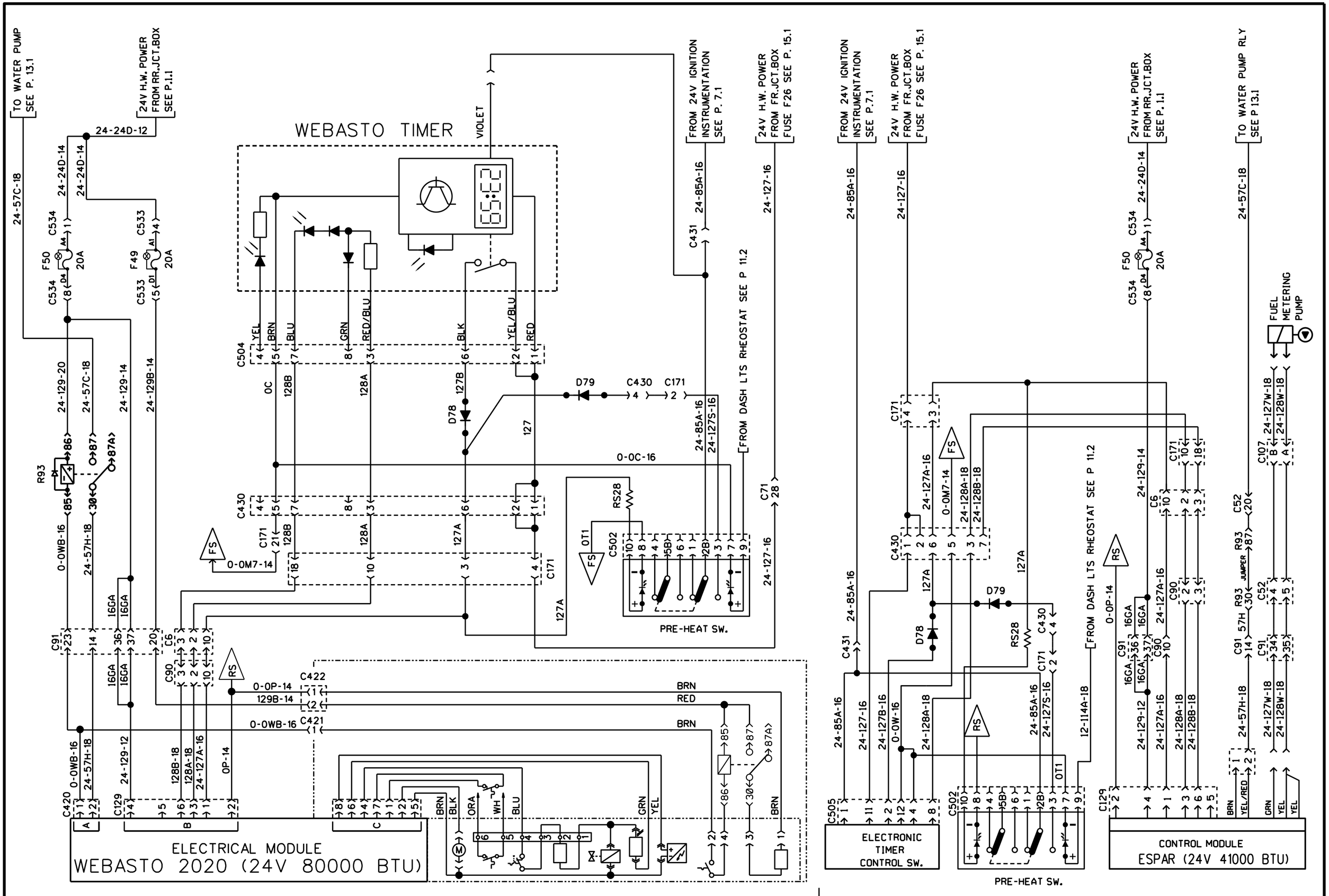

PRE-HEAT WATER HEATER (WEBASTO 2020)

PRE-HEAT WATER HEATER (ESPAR)

PREVOST	WIRING DIAGRAM	NO: D060902	PAGE: 26.1	REVISION 00

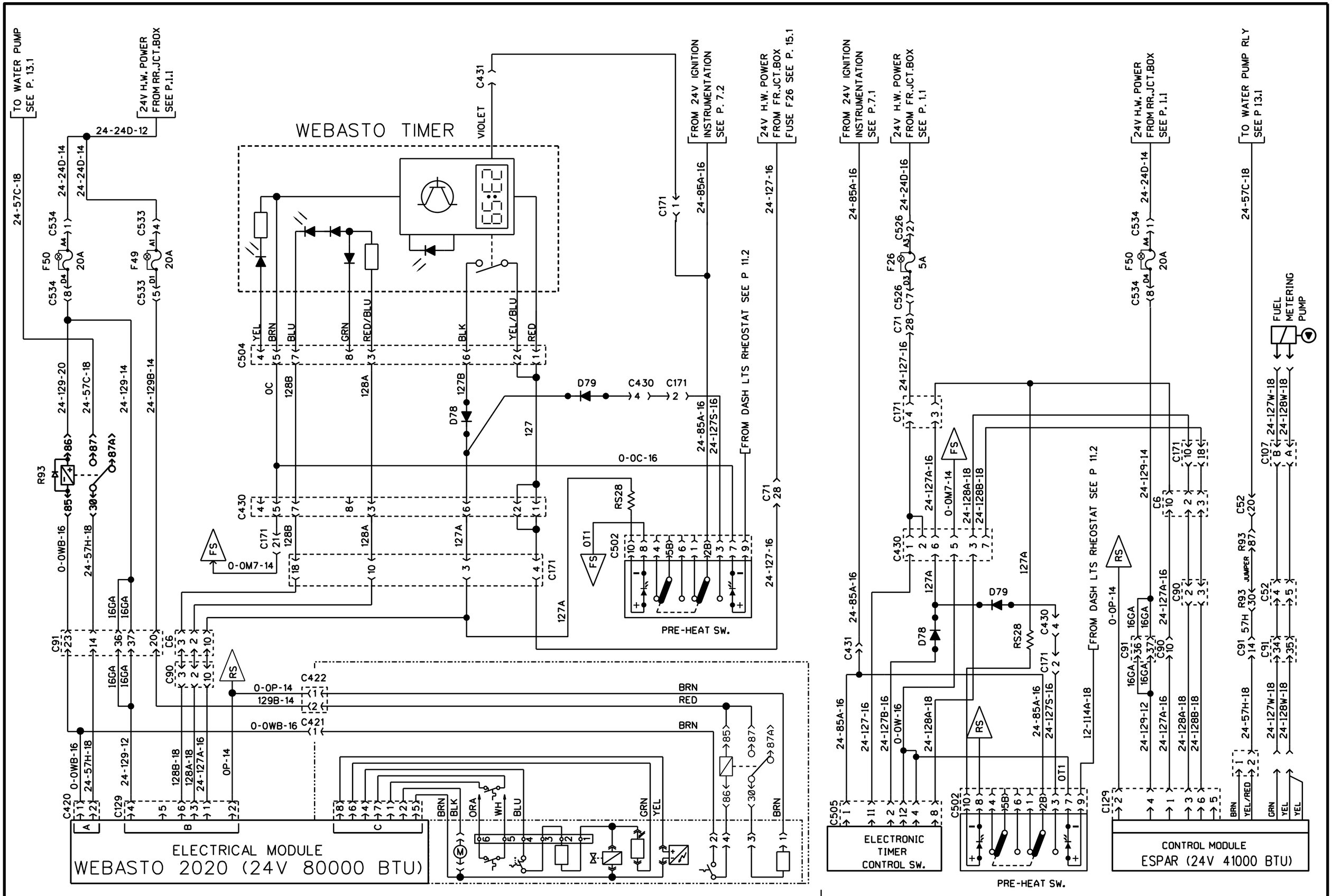

PRE-HEAT WATER HEATER (WEBASTO 2020)

PRE-HEAT WATER HEATER (ESPAR)

PREVOST	WIRING DIAGRAM	NO: D060902	PAGE: 26.1	REVISION 01

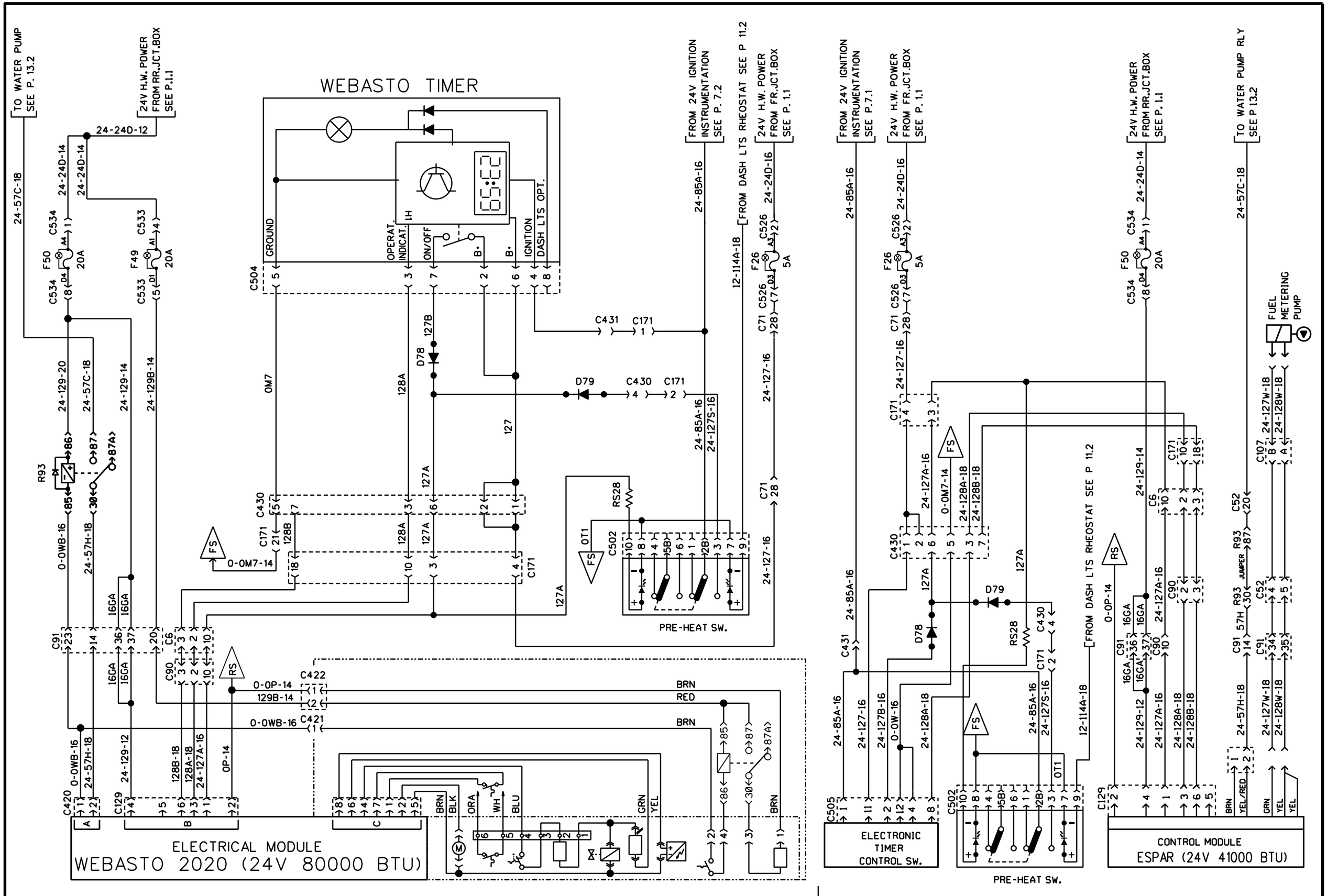
WEBASTO TIMER
TO WATER PUMP SEE P. 13.2
24V H.W. POWER FROM RR.JCT.BOX SEE P.1.1
24-24D-12
24-24D-14
24-57C-18
F50 20A
F49 20A
C534
C533
R93
24-129-20
24-57C-18
24-129-14
24-129B-14
0-OWB-16
24-57H-18
16GA
C91
C6
C90
GROUND
OPERAT. INDICAT.
ON/OFF
IGNITION
DASH LTS OPT.
C504
0M7
128A
127B
D78
127
127A
128B
C430
C171
0-OM7-14
FS
RS
OT1
RS28
D79
C431
C430
C171
24-85A-16
24-127S-16
FROM 24V IGNITION INSTRUMENTATION SEE P. 7.2
FROM DASH LTS RHEOSTAT SEE P 11.2
12-114A-18
24-127-16
C71
C502
PRE-HEAT SW.
C422
0-OP-14
129B-14
C421
0-OWB-16
BRN
RED
C420
C129
128B-18
128A-18
24-127A-16
OP-14
BLK
ORA
WH
BLU
GRN
YEL
ELECTRICAL MODULE
WEBASTO 2020 (24V 80000 BTU)
PRE-HEAT WATER HEATER (WEBASTO 2020)
FROM 24V IGNITION INSTRUMENTATION SEE P.7.1
24V H.W. POWER FROM FR.JCT.BOX SEE P. 1.1
24-127-16
24-127A-16
24-128A-18
24-128B-18
0-OW-16
24-127B-16
C505
ELECTRONIC TIMER CONTROL SW.
PRE-HEAT SW.
FROM DASH LTS RHEOSTAT SEE P 11.2
0-OP-14
24-129-12
24-127A-16
24-128A-18
24-128B-18
C90
C52
JUMPER
57H
24-57H-18
24-127W-18
24-128W-18
C107
FUEL METERING PUMP
YEL/RED
CONTROL MODULE
ESPAR (24V 41000 BTU)
PRE-HEAT WATER HEATER (ESPAR)

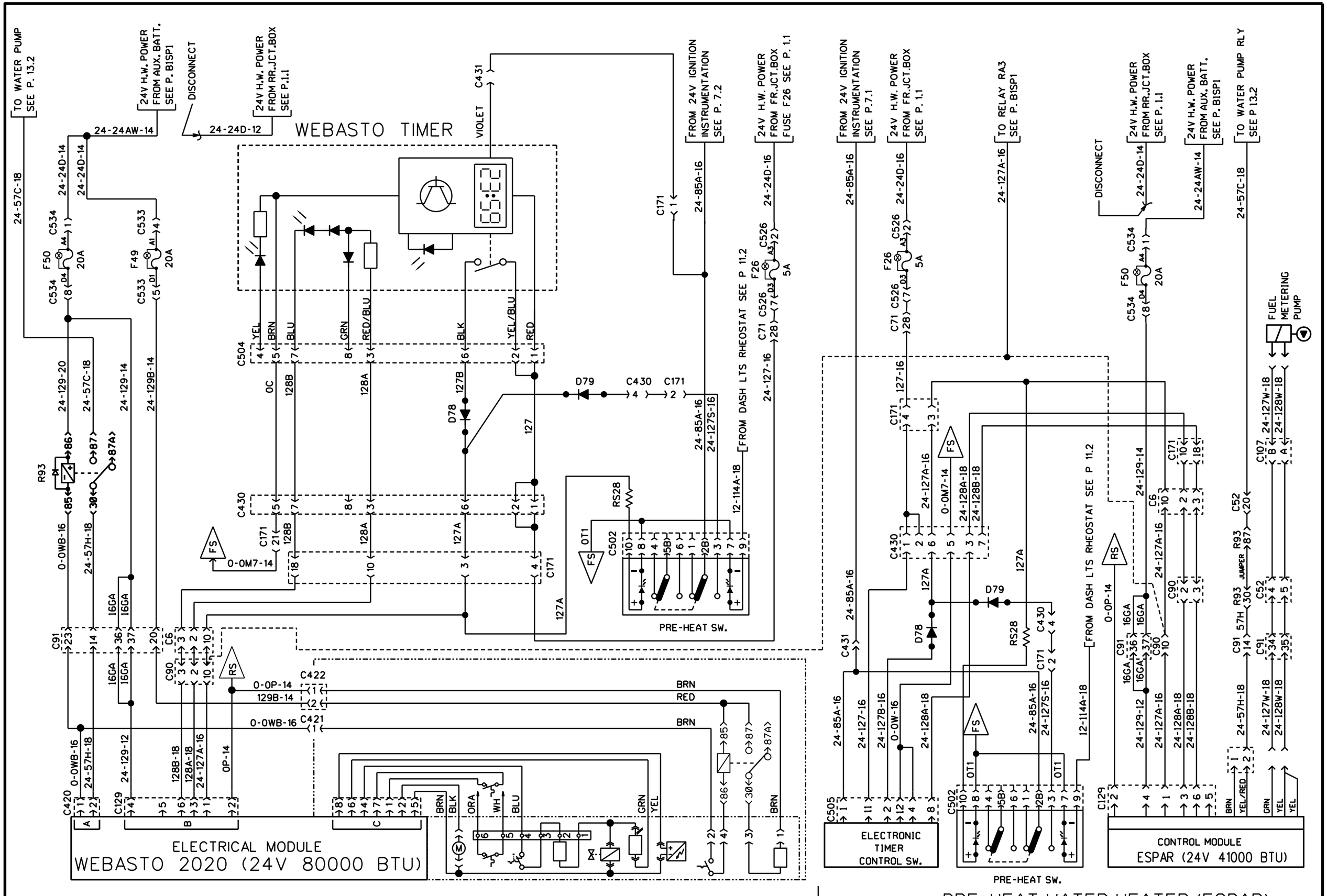

PRE-HEAT WATER HEATER (WEBASTO 2020)

PRE-HEAT WATER HEATER (ESPAR)

ORLEANS & ADIRONDACK

PREVOST	WIRING DIAGRAM	NO: D060902	PAGE: 26.1sp1	REVISION 00

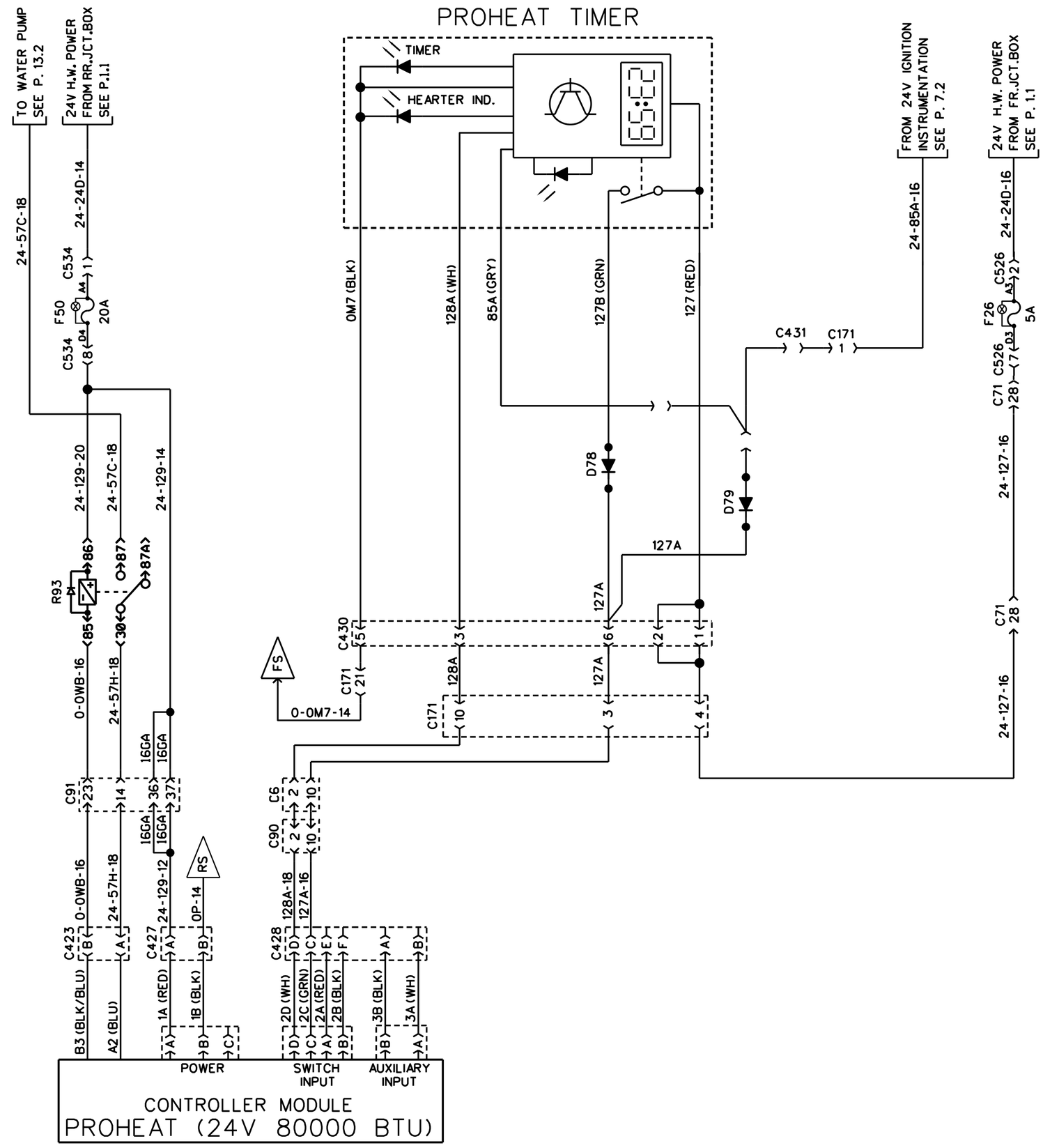

PRE-HEAT WATER HEATER (PROHEAT)

PREVOST	WIRING DIAGRAM	NO: D060902	PAGE: 26.1 sp2	REVISION 00

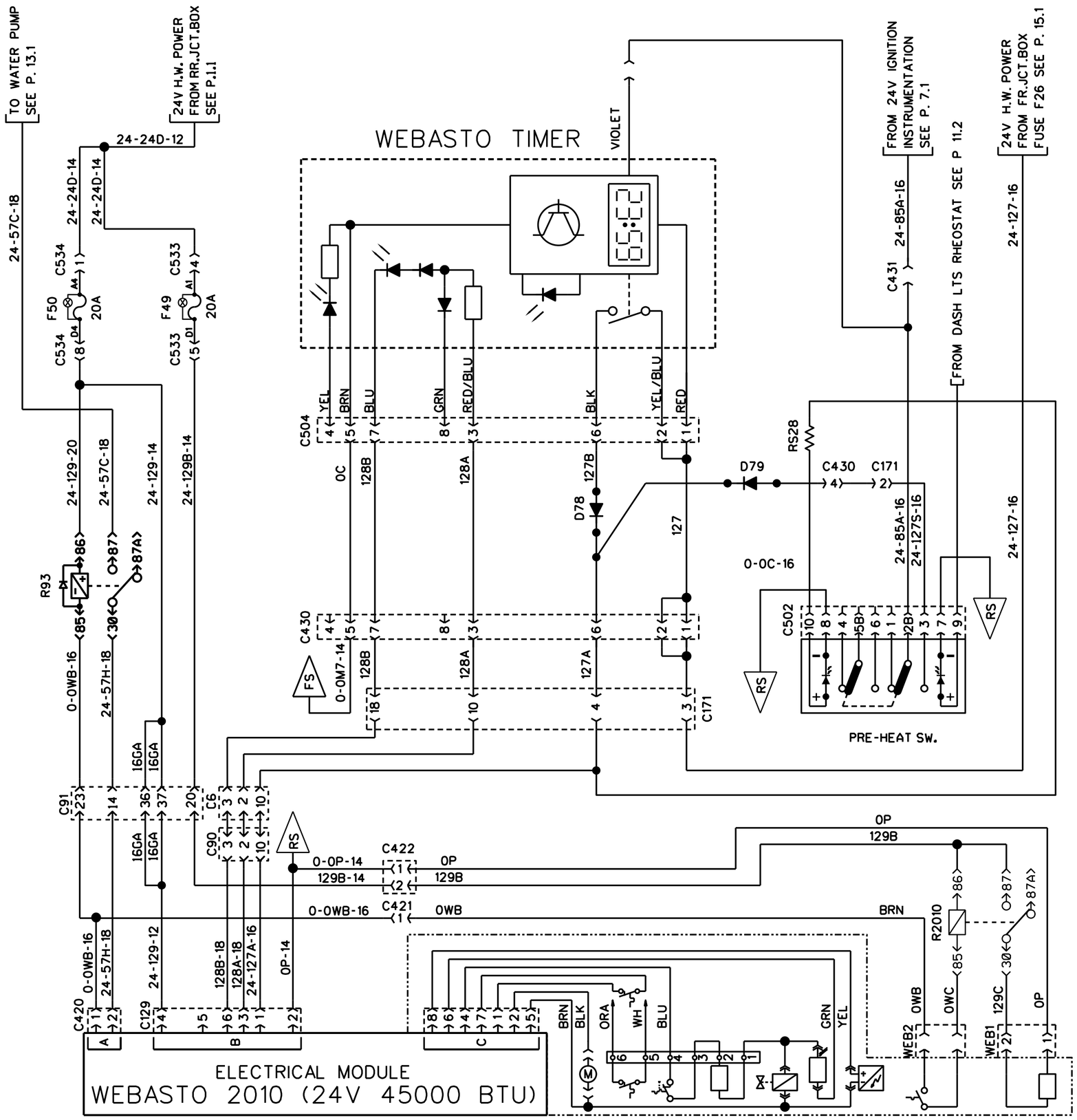

PRE-HEAT WATER HEATER (WEBASTO 2010)

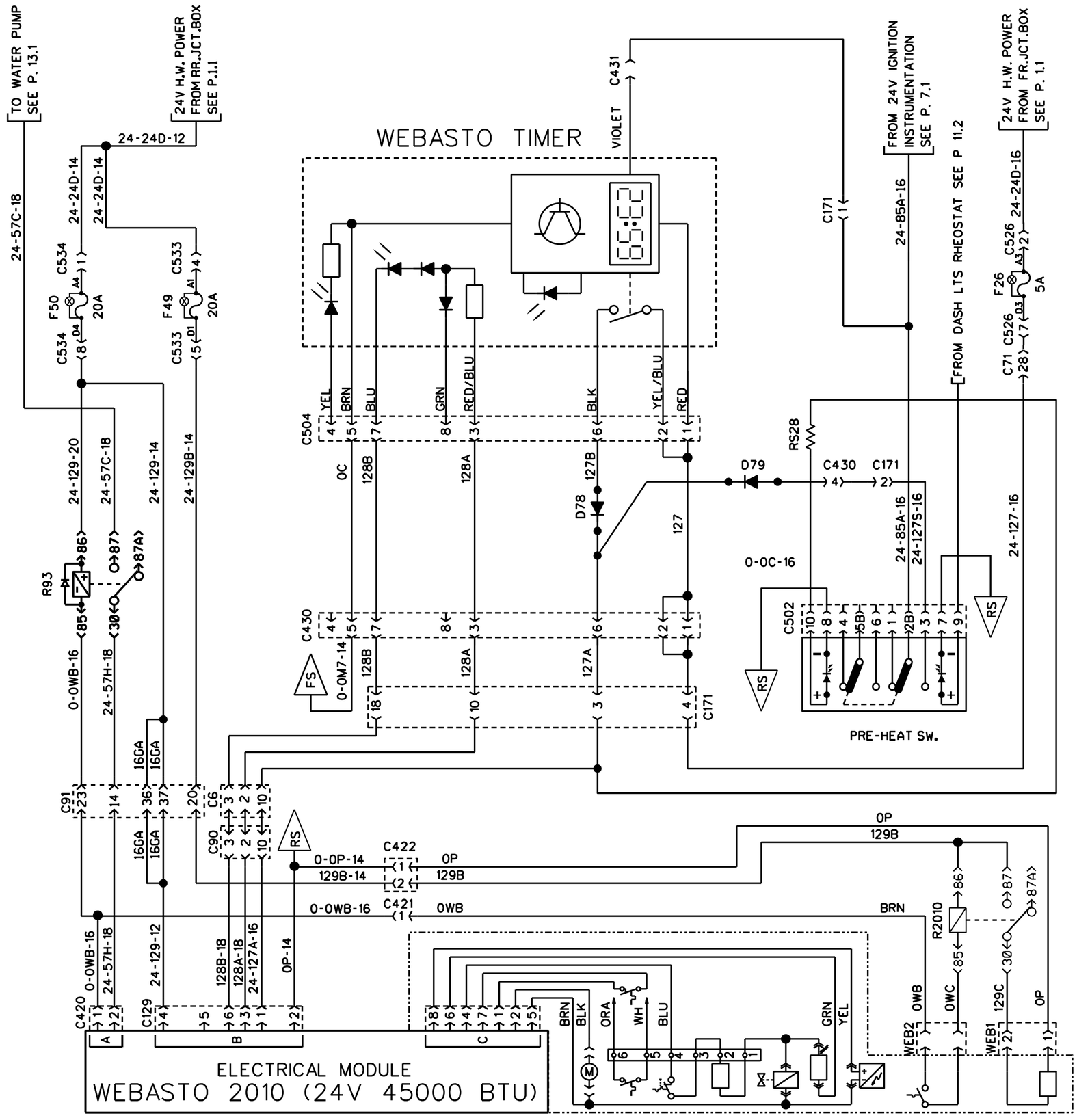

PRE-HEAT WATER HEATER (WEBASTO 2010)

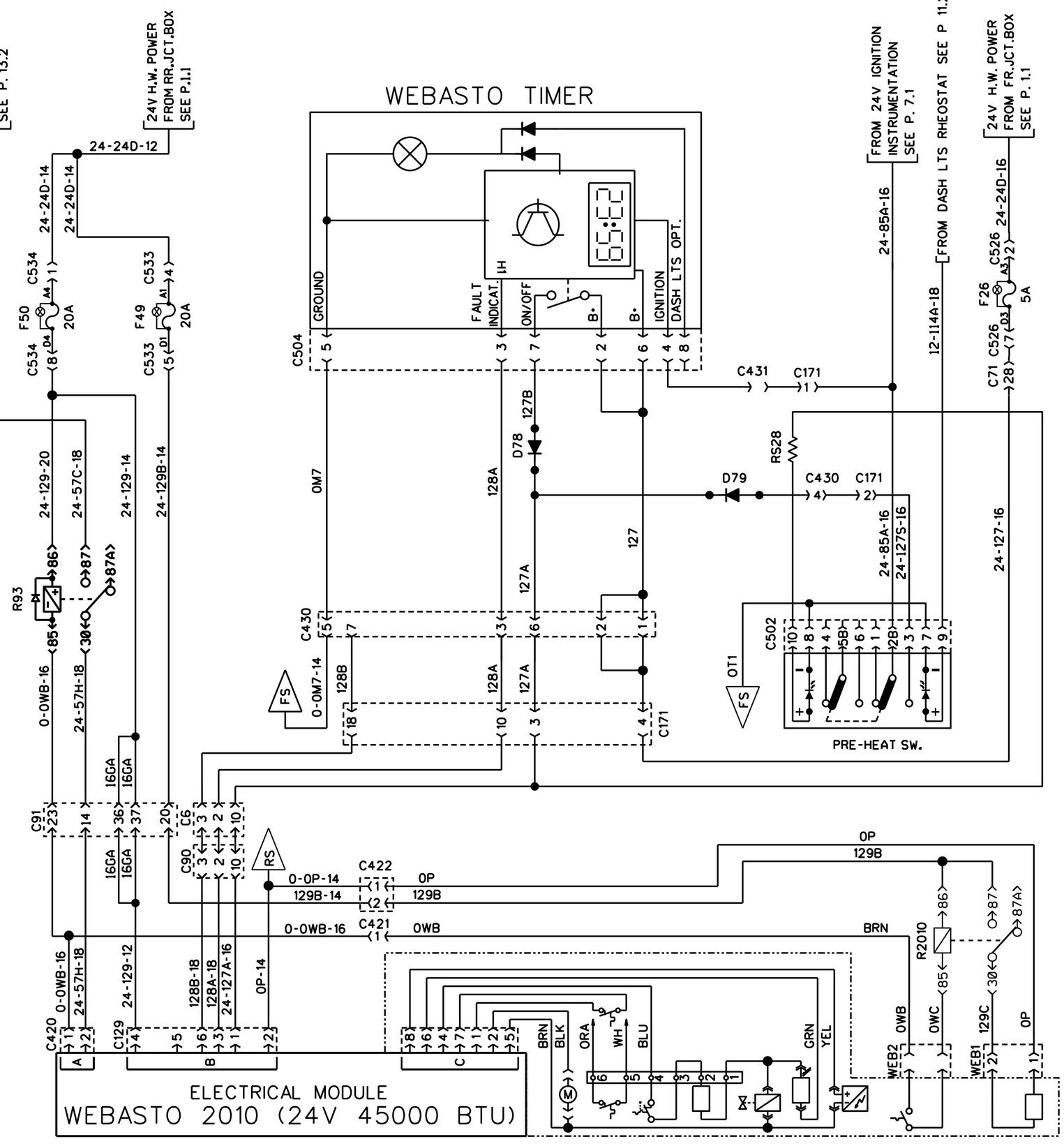

PRE-HEAT WATER HEATER (WEBASTO 2010)

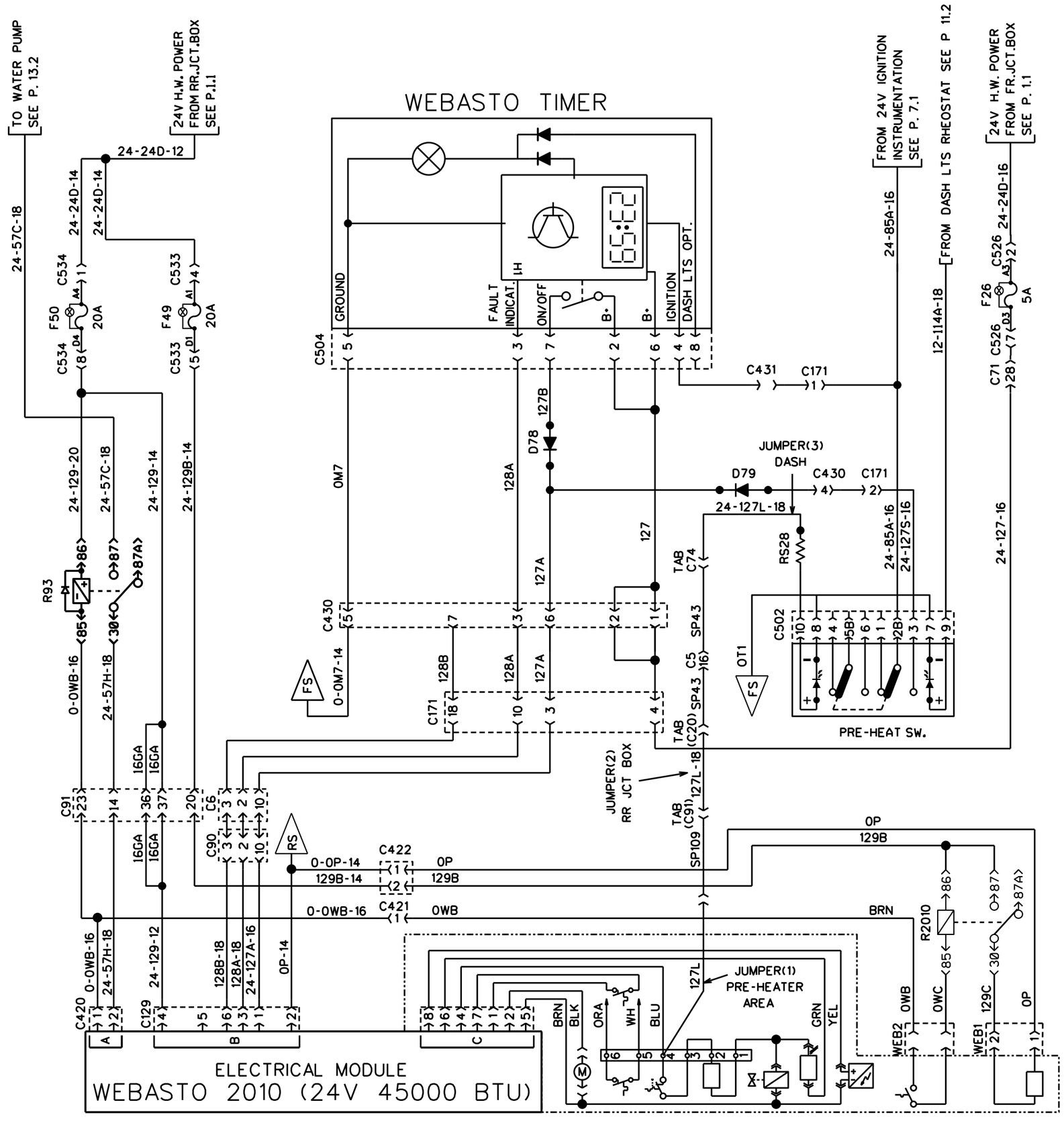

PRE-HEAT WATER HEATER (WEBASTO 2010)

PREVOST	WIRING DIAGRAM	NO: D060902	PAGE: 26.2 SP1	REVISION 00

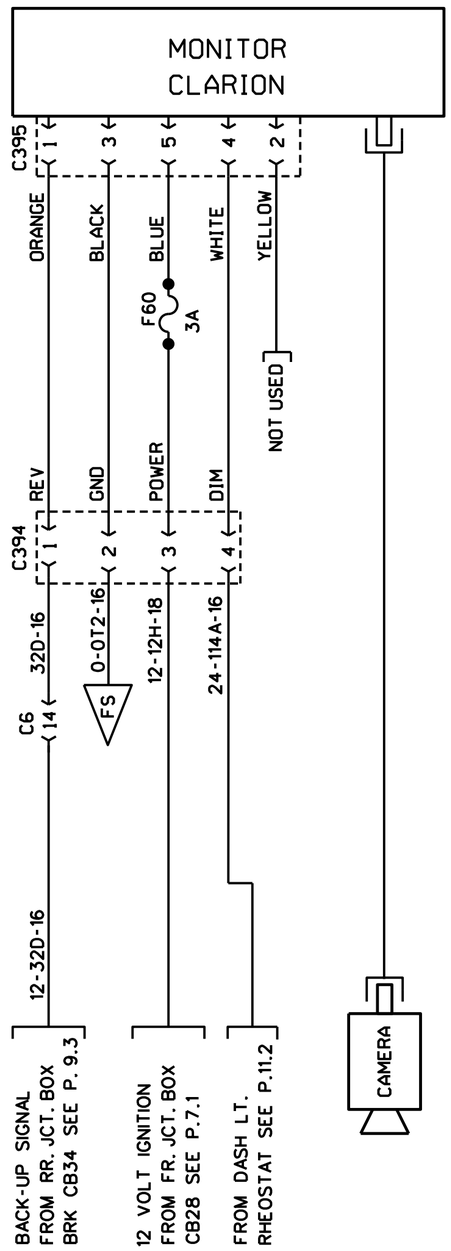

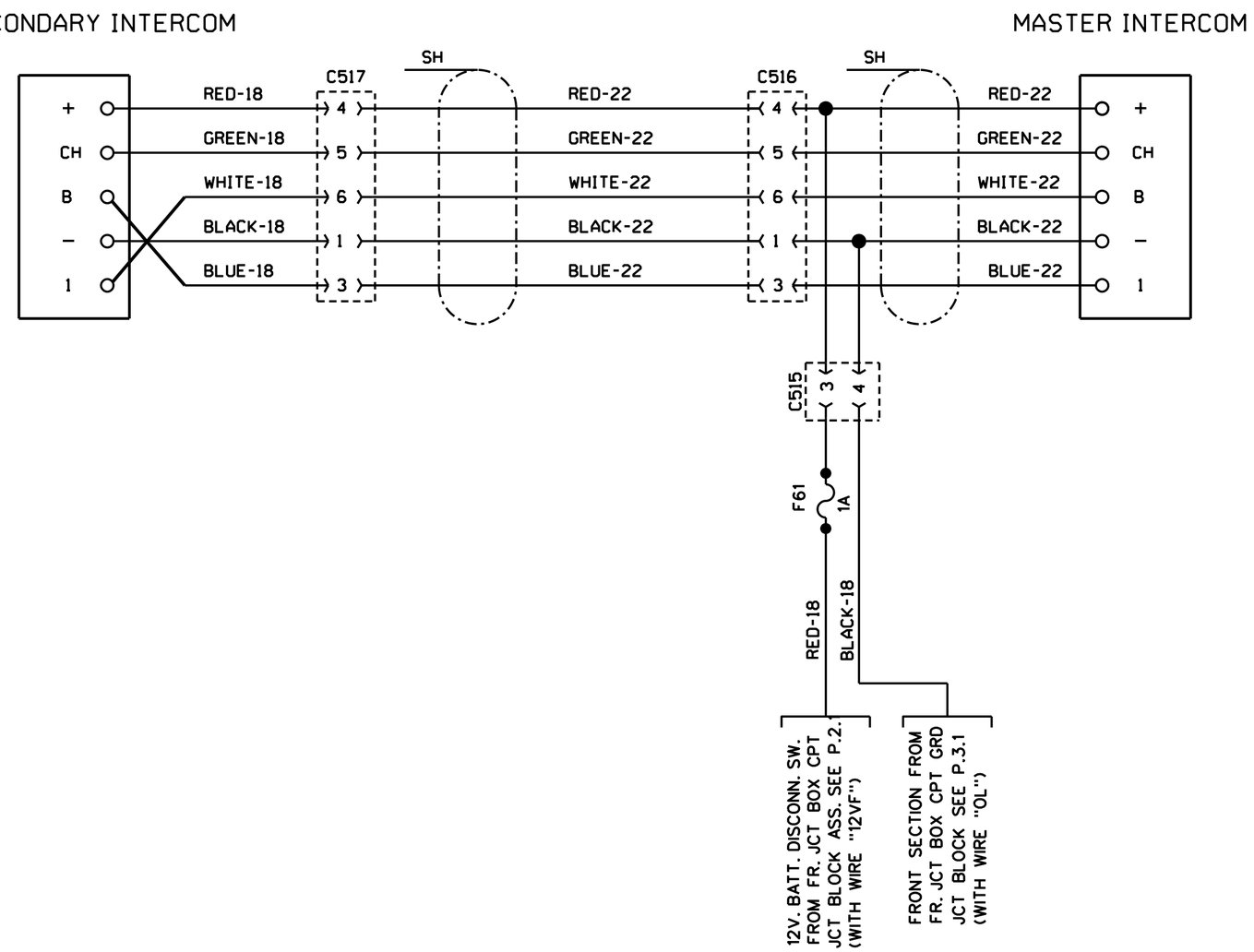

BACK-UP MONITOR (CLARION)

INTERCOM

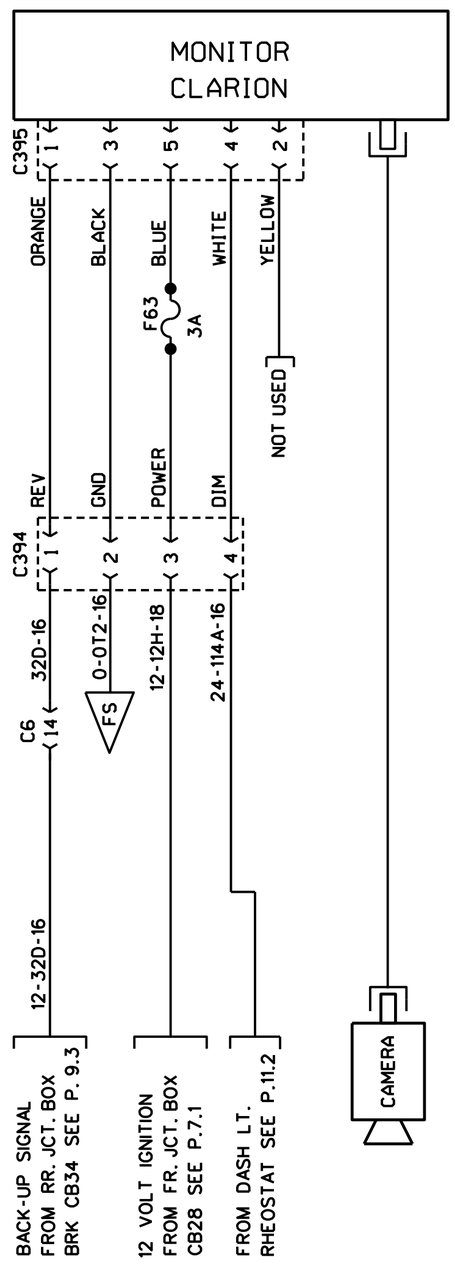

BACK-UP MONITOR (CLARION)

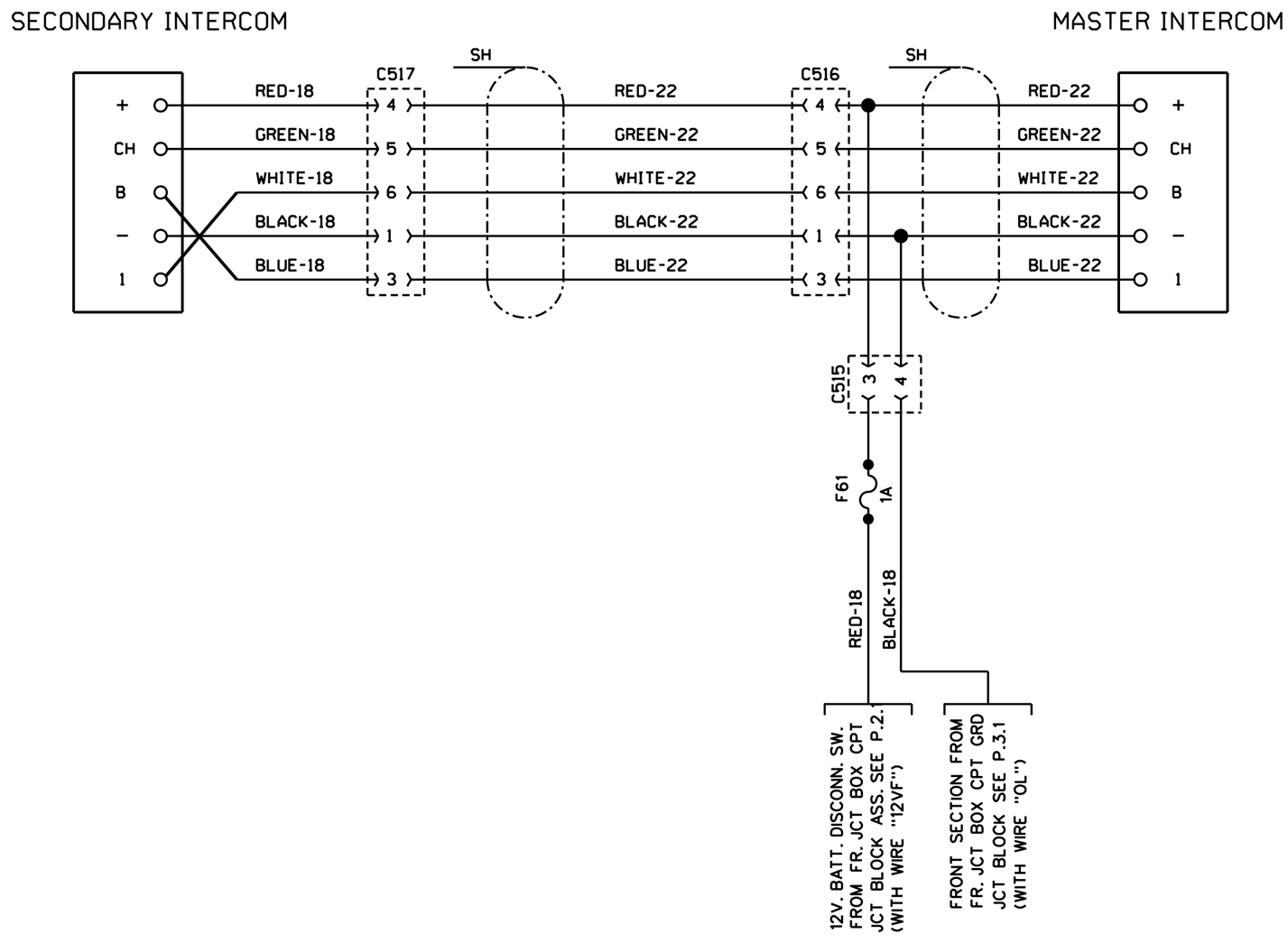

INTERCOM

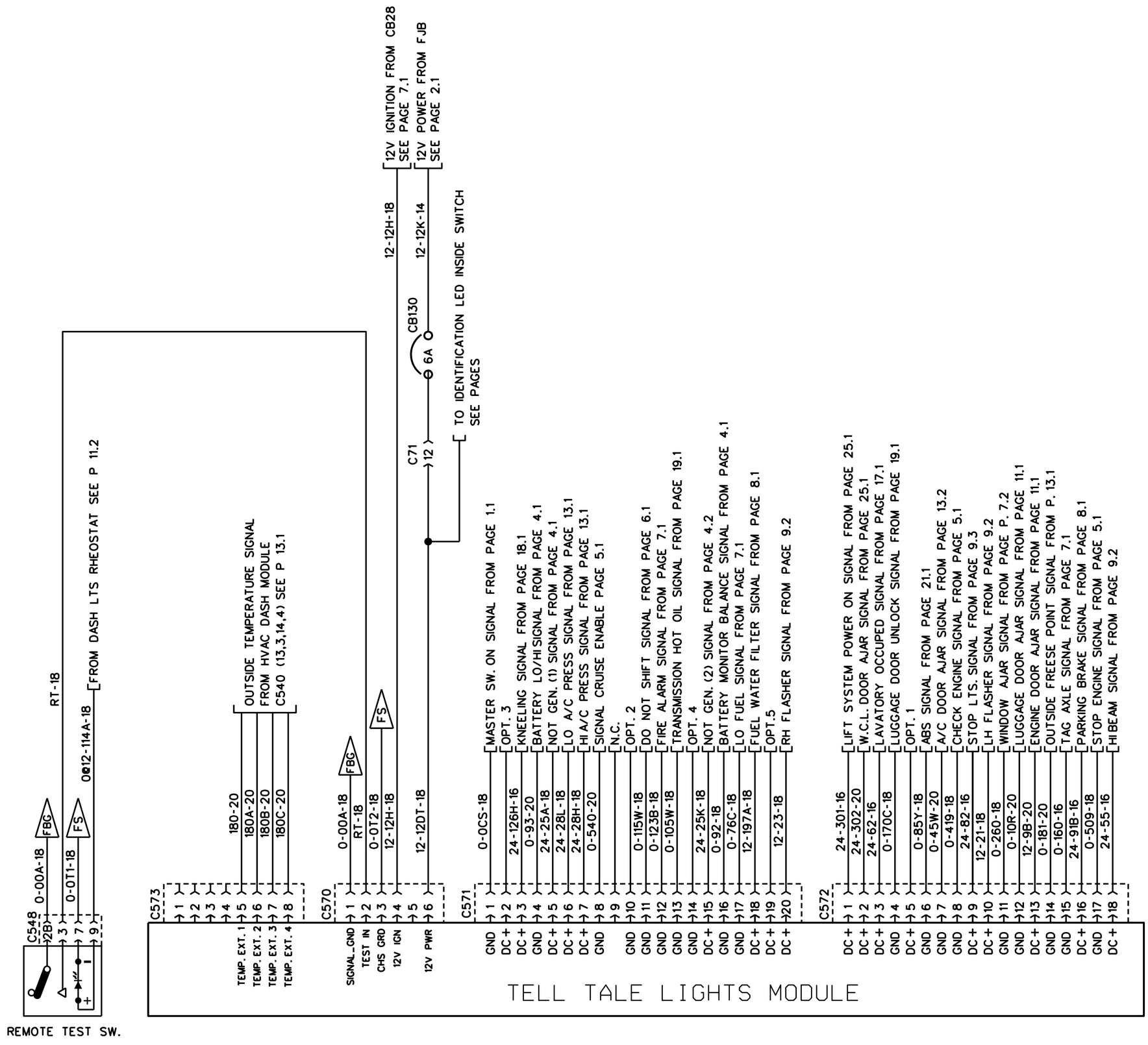

TELL TALE LIGHT MODULES

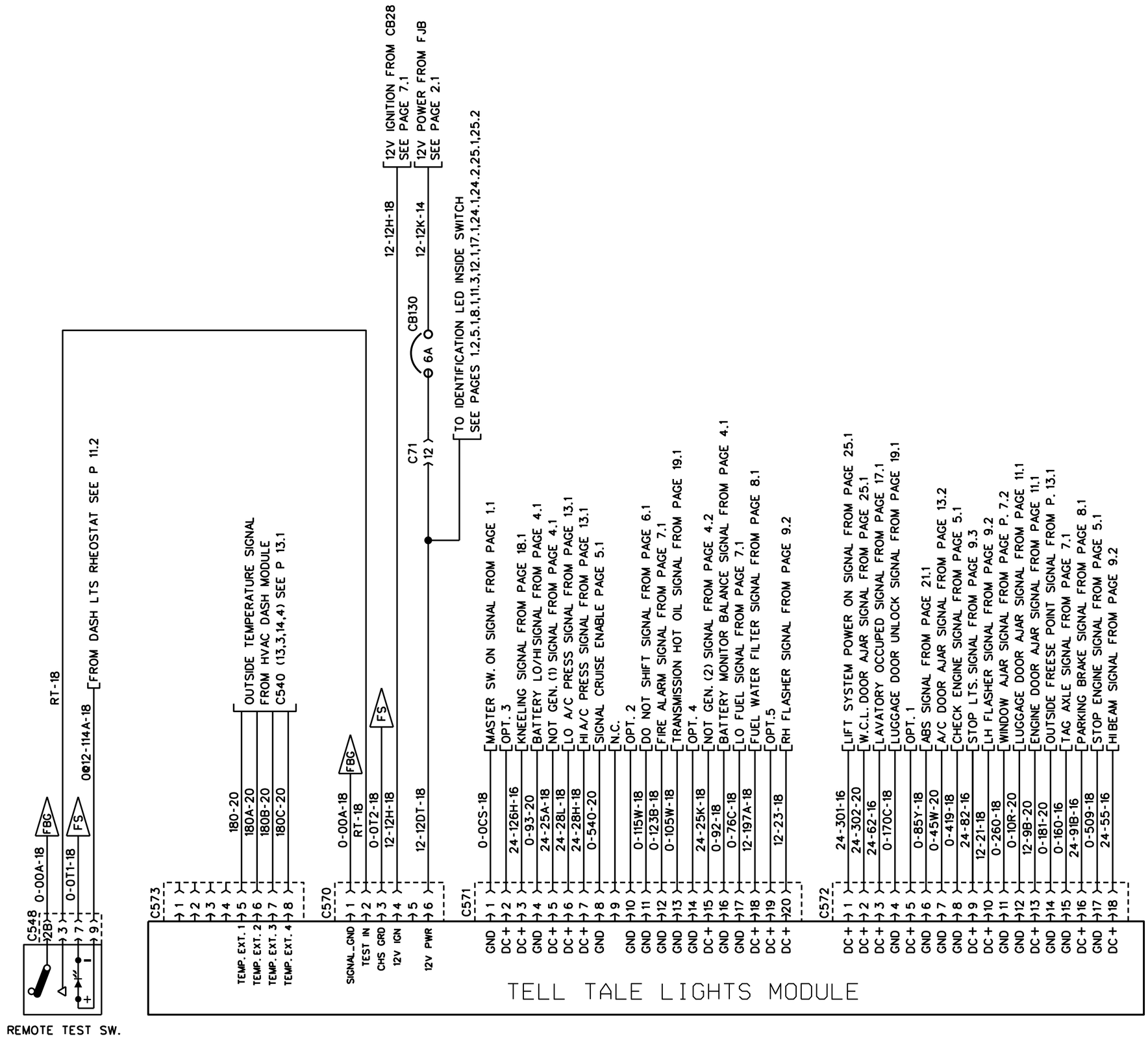

TELL TALE LIGHT MODULES

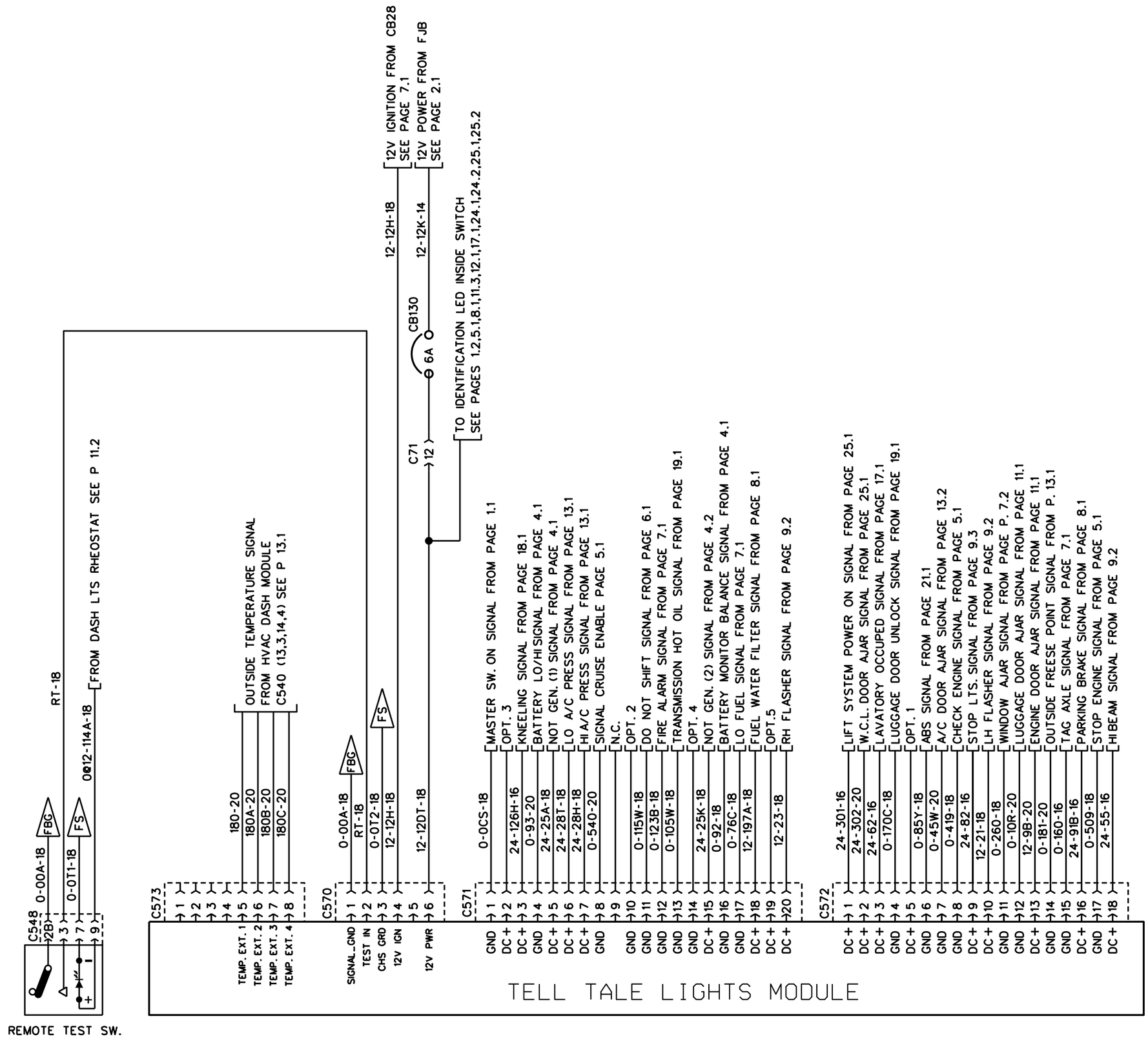

TELL TALE LIGHT MODULES

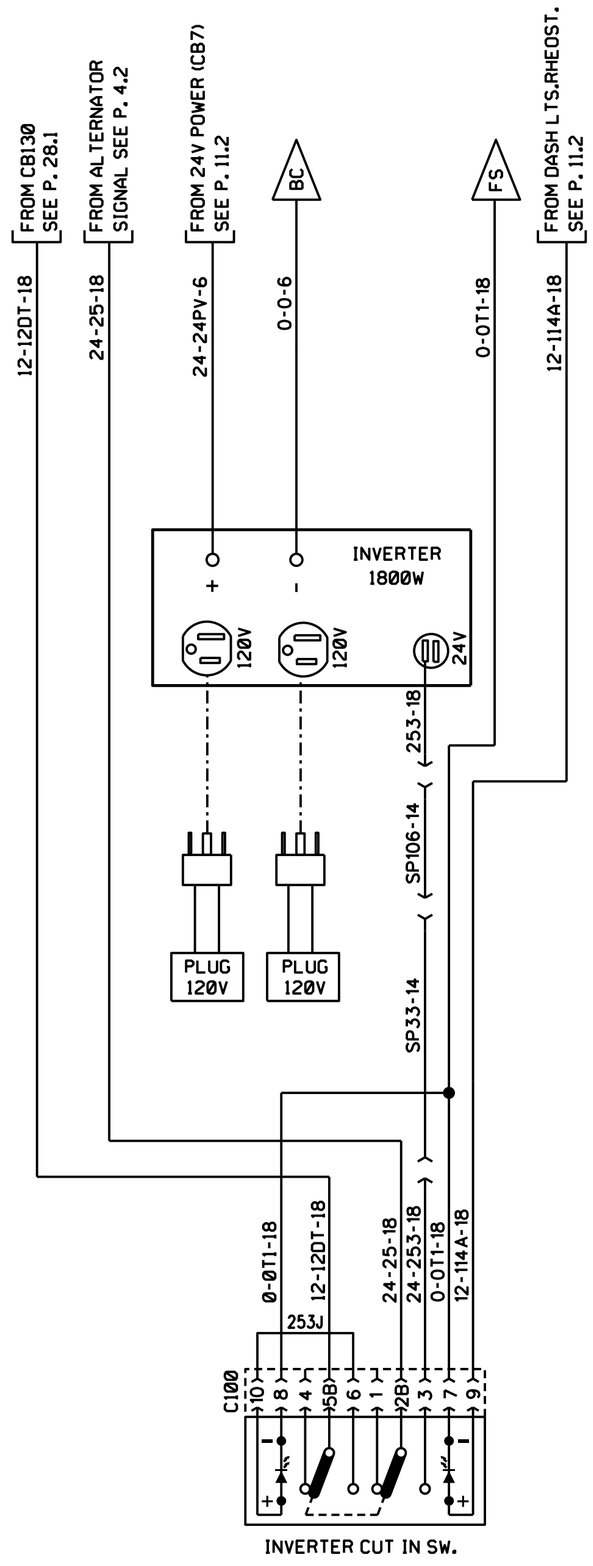

PLUG 120 VOLT

PREVOST	WIRING DIAGRAM	NO: D060902	PAGE: 29.1	REVISION 00

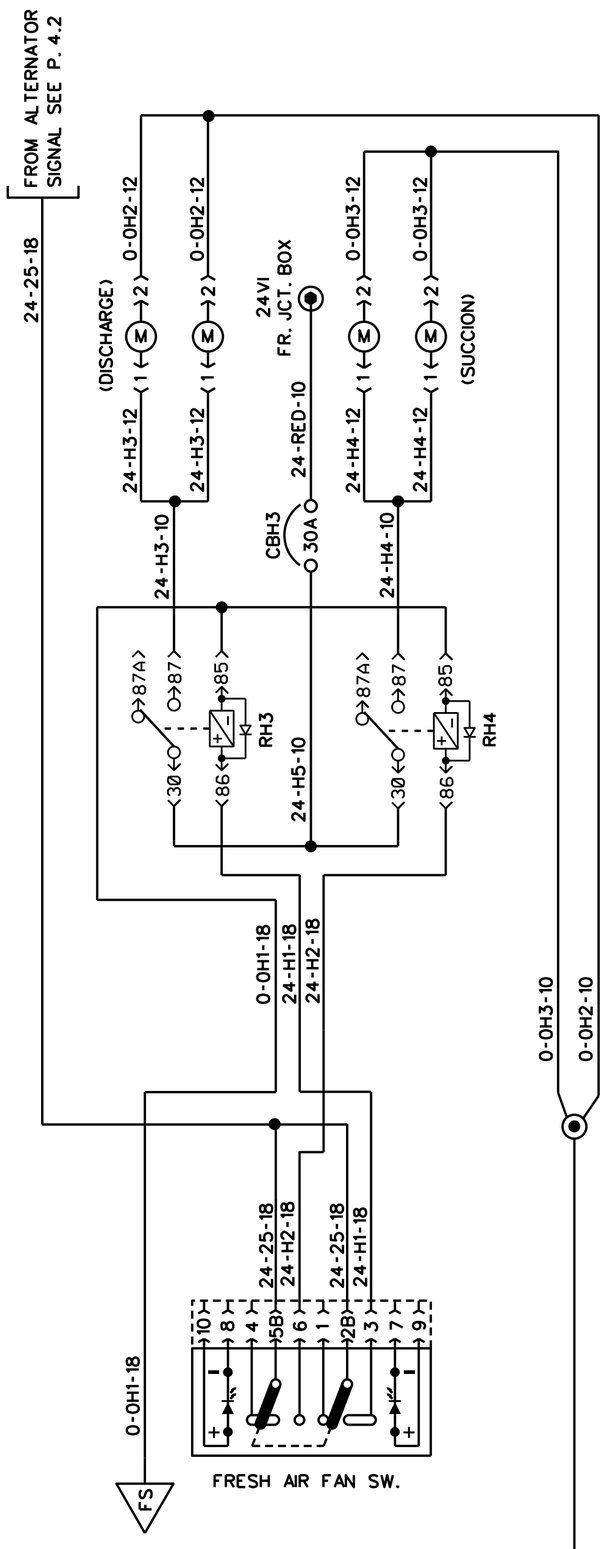

LOAD FAN (MAX.)

2 MOTEUR=12 AMP. TOTAL
4 MOTEUR=24 AMP. TOTAL

CHASSIS GROUND

CHASSIS GROUND

FRESH AIR FAN SW.

X3298 (LIMOCAR)

PREVOST	WIRING DIAGRAM	NO: D060902	PAGE: 31.1 sp1	REVISION 00